Service Manual

TOP NEXT

ORDER NO.HPD0309A02C3

Service Manual

MASSAGE LOUNGER

- EP1260-A3

SPECIFICATIONS

Power Supply:	AC110V,220V,230V(Separately available)50~60Hz	
Power Consumption:	125W (Approx. 5W in Standby mode with the controller turned off or when the unit is turned off.)	
Upper Body Massage		
Massage Area (Up-Down):	Approx. 70cm	
Massage Area (Left-Right):	Distance between Massage Heads during Operation Approx. 6 – 15cm	
Massage Area (Forward-Back):	Approx. 5.5cm	
Massage Cycle:	Shiatsu:	Approx. 12 cycles/min.
	Swedish:	Approx. 11 cycles/min.
	Knead:	Approx. 12 cycles/min.
	Vibration:	Approx. 3,000 – 3,600 cycles/min.
	Tap A:	Approx. 50 – 3,600 cycles/min.
	Tap B:	Approx. 200 – 300 cycles/min.
	Whole Back Roll:	Approx. 2 cycles/min. (Approx. 35 sec./cycle)
	Regional Roll:	Approx. 6 – 10 cycles/min. (Approx. 6 – 10 sec./cycle)
Leg Massage		
Air Pressure:	Strong:	Approx. 23kPa
	Weak:	Approx. 14kPa
Massage Cycle:		Approx. 2 cycles/min. (Approx. 28 sec./cycle)
Reclining Angle:	Backrest:	Approx. 120° – 170°
	Legrest:	Approx. 0° – 85°
Automatic Shut-Off:	Approx. 15 min. for both upper body and legs (15 – 17 min.)	
Dimensions:		
When not reclined.	105cm (H) × 68cm (W) × 105cm (D)	
When reclined.	60cm (H) × 68cm (W) × 165cm (D)	
Weight:	Approx. 59kg	

© 2003 Matsushita Electric Works, Ltd. All rights reserved. Unauthorized copying and distribution is a violation of law.

⚠ WARNING

This service information is designed for experienced repair technicians only and is not designed for use by the general public.
It does not contain warnings or cautions to advise non-technical individuals of potential dangers in attempting to service a product.
Products powered by electricity should be serviced or repaired only by experienced professional technicians. Any attempt to service or repair the product or products dealt with in this service information by anyone else could result in serious injury or death.

National

TOP NEXT

1.1 Massage lounger

TOP PREVIOUS NEXT

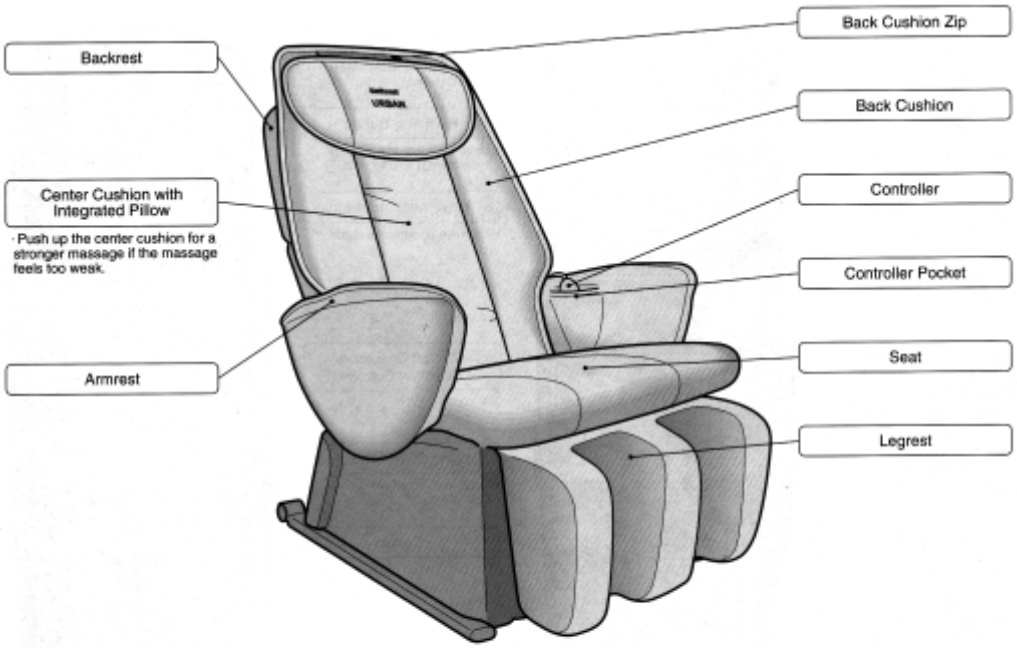

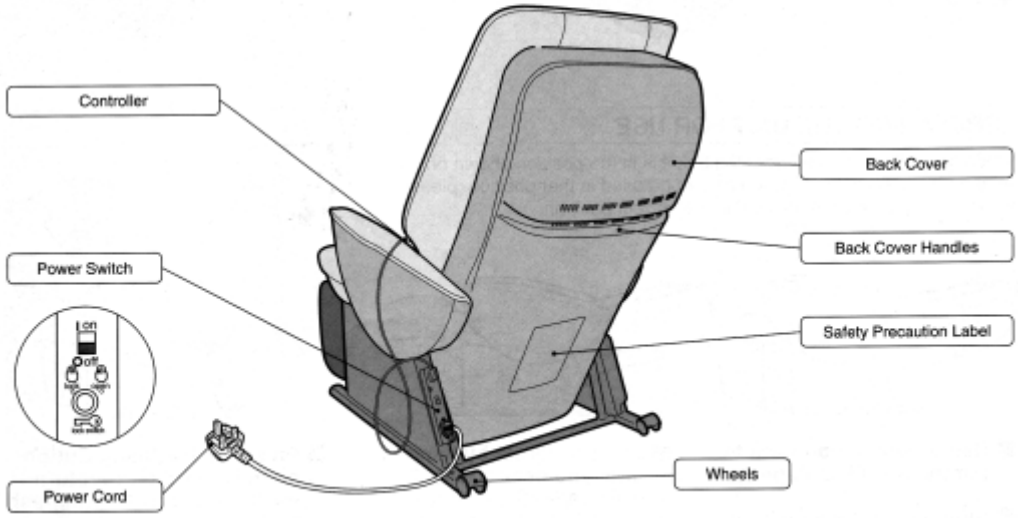

TOP PREVIOUS NEXT

1.2 Controller

TOP PREVIOUS NEXT

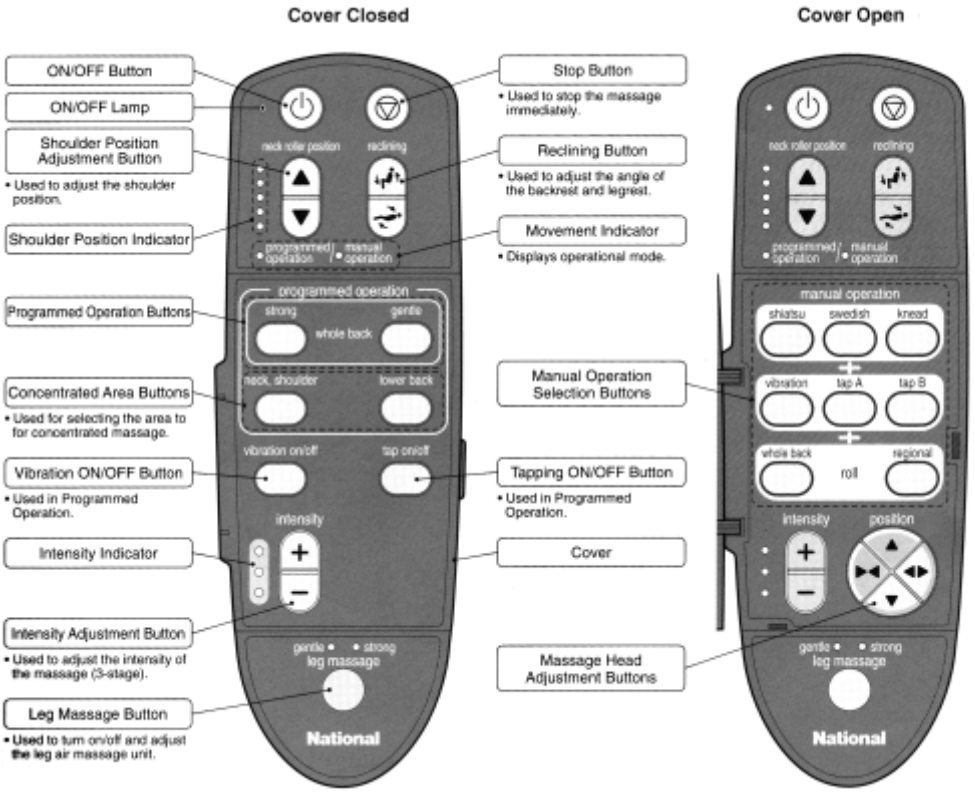

TOP PREVIOUS NEXT

2 MASSAGE RANGE (MOVEMENT RANGE OF MASSAGE WHEELS)SHIATSU MASSAGE, SWEDISH MASSAGE, KNEADING, VIBRATING, TAPPING A, TAPPING B, WHOLE BACK ROLLING, REGIONAL ROLLING

TOP PREVIOUS NEXT

Width adjustment

Approx.60 to 150mm

Intensity adjustment

Shiatsu, Swedish, Knead, vibration, Tap A, Tap B, whole back roll, and Regional roll (from gentle to strong)

:55mm-wide adjustability where massage heads push out toward body as intensity increases.

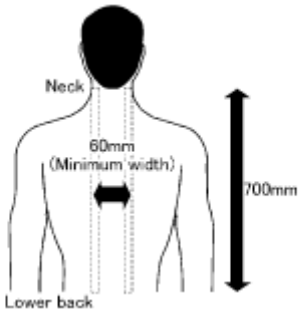

TOP PREVIOUS NEXT

3.1 Turning on the power

TOP PREVIOUS NEXT

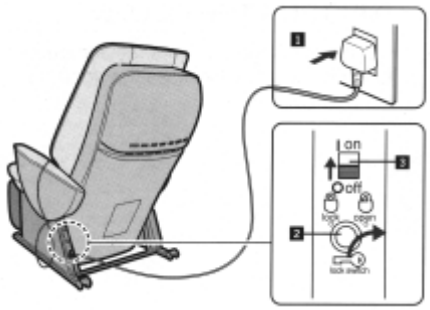

1. Plug the power plug into the power socket.
2. Turn the lock switch to the open position.
3. Turn on the power switch on the back of the unit.
   - When the operating lock switch is pointing toward ´lock´, the power switch cannot be moved to the ´on´ position.

After each use.	
•	Be sure to turn the power switch to ´off´.
•	To prevent children from using this unit, lock the power switch by moving the operating lock switch to the ´lock´ position.
•	As a further caution, unplug the power cord from the power socket after each use.
•	Always keep the key in a safe place.

Timer

When the on/off button is pushed, a timer begins to prevent overuse. After approximately 15 minutes, time expires and the massage wheel goes into storage position.

TOP PREVIOUS NEXT

4 REQUIRED TOOLS

TOP PREVIOUS NEXT

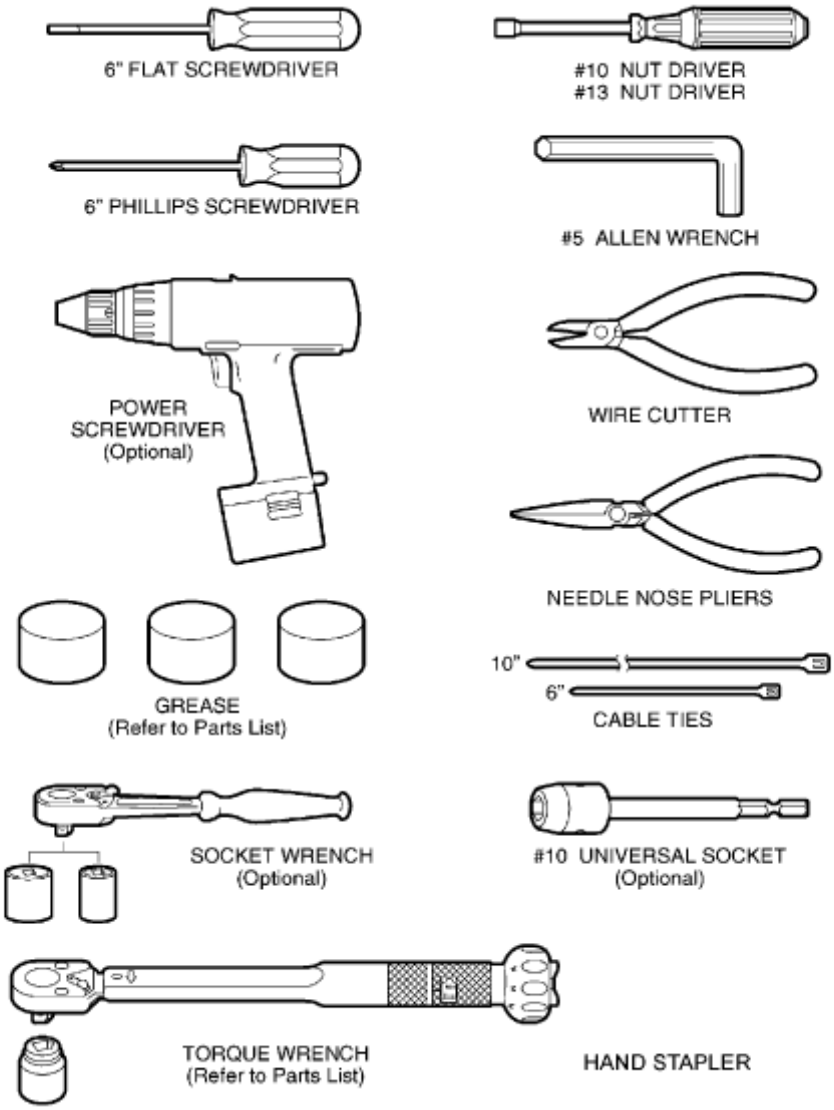

TOP PREVIOUS NEXT

5.1 Massage mechanism

TOP PREVIOUS NEXT

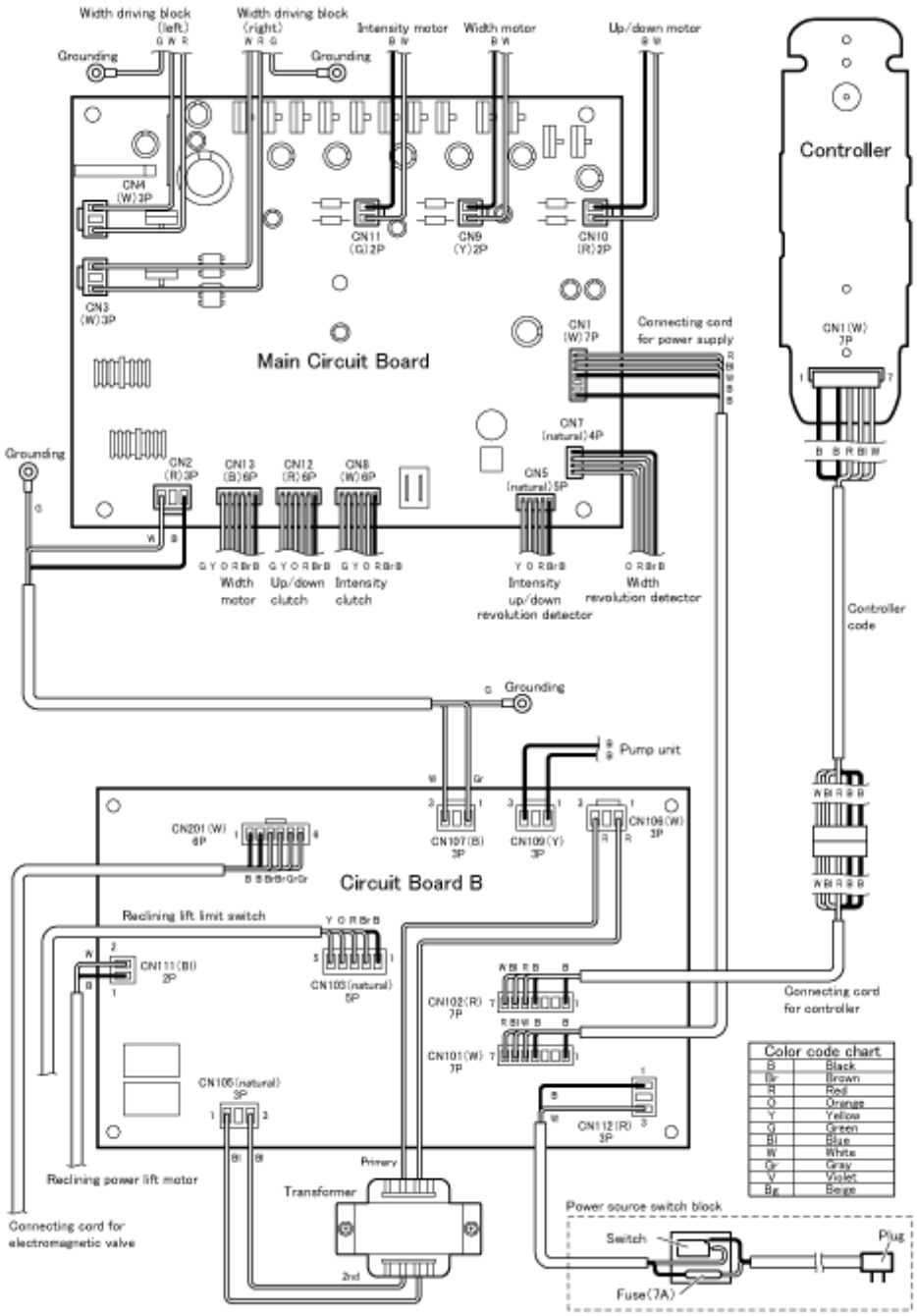

TOP PREVIOUS NEXT

5.2 Air ottoman

TOP PREVIOUS NEXT

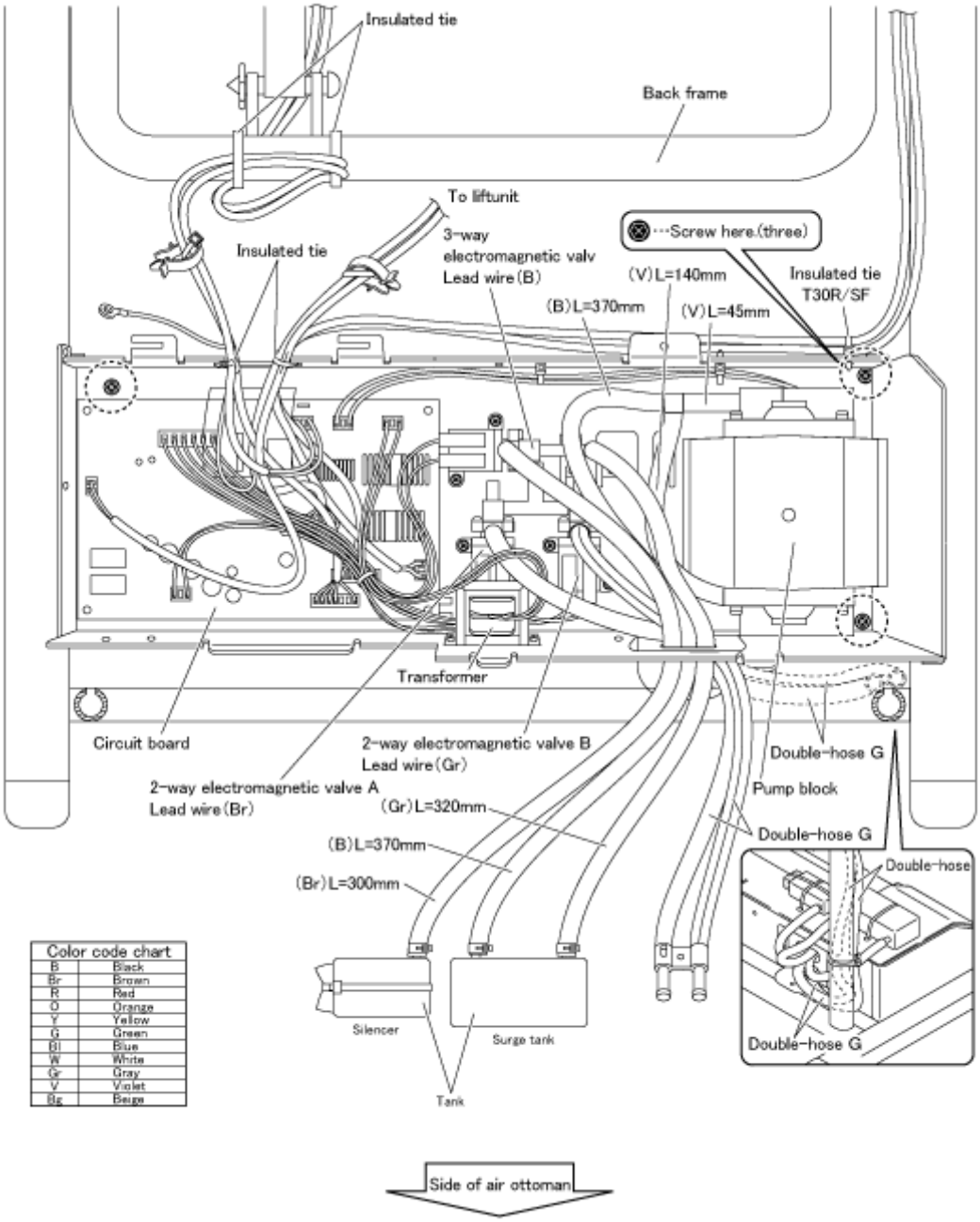

Color code chart	
B	Black
Br	Brown
R	Red
O	Orange
Y	Yellow
G	Green
Bl	Blue
W	White
Gr	Gray
V	Violet
Bg	Beige

TOP PREVIOUS NEXT

6 DISPLAY METHOD OF MASSAGE BLOCK TOTAL USE TIME AND OPERATION TIME

TOP PREVIOUS NEXT

Total use time

While pushing the + and the - intensity adjustment buttons simultaneously, turn on the power switch and continue to hold the buttons for approximately 5 seconds. Release after the on/off LED lights up.

*When replacing the Main Circuit PCB, the use time is counted to zero because the use time is memorized in Main Circuit PCB.

*When pushing on/off button, the operation returns to normal mode.

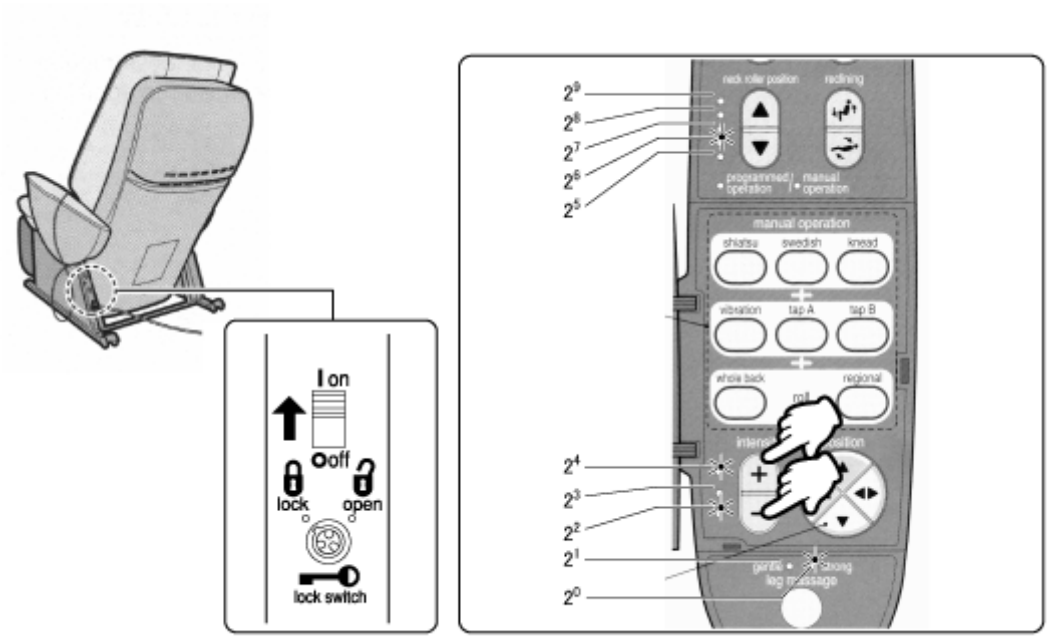

Display method

Display it by utilizing LEDs of controller.

e.g. In the above case, (20 + 22 + 24 + 26) × 5 = (1 + 4 + 16 + 64) × 5 = 425 hours.

It is possible to indicate up to 5,115 hours.

To read the each operation function, push the following buttons after reading the total use time.

You can read the each operation function use time as the same display method of total use time.

Chart for reading each function use time

Button operation	Function for reading use time	LED display for confirming function
Shiatsu	Shiatsu	Shiatsu LED lights up
Swedish	Swedish	Swedish LED lights up

Kneading	Kneading	Kneading LED lights up
Vibration	Vibration	Vibration LED lights up
Tapping A	Tapping A	Tapping A LED lights up
Tapping B	Tapping B	Tapping B LED lights up
Whole back rolling	Whole back rolling	Whole back rolling LED lights up
Regional rolling	Regional rolling	Regional rolling LED lights up

TOP PREVIOUS NEXT

7 MOTION OF THE CLUTCH AND BELT BASED ON VARIOUS MASSAGER OPERATIONS.

TOP PREVIOUS NEXT

Massager operation and belt motion

Belt / Massage operation	Intensity adjustment belt	Massage belt	Tapping belt	Up/down belt
Shiatsu, Swedish, Kneading	×	○	×	×
Kneading and rolling	×	○	×	○
Rolling	×	×	×	○
Tapping	×	×	○	×
Tapping and rolling	×	×	○	○
Width adjustment	×	○	×	×
Intensity adjustment	○	○	×	×

○ : Power is transmitted to the shaft.
× : Power is not transmitted to the shaft.
*Idling : Although the pulley is rotating, power is not transmitted to the shaft.

Massager operation and clutch motion

Clutch / Massage operation	Intensity clutch	Massage clutch	Tapping clutch	Up/down clutch
Shiatsu, Swedish, Kneading	×	○	×	×
Kneading and rolling	×	○	×	○
Rolling	×	×	×	○
Tapping	×	×	○	×
Tapping and rolling	×	×	○	○
Width adjustment	×	○	×	×
Intensity adjustment	○	×	×	×

○ : Electrically ON
× : Electrically OFF

TOP PREVIOUS NEXT

8 CONTROL OF THE AIR-MASSAGE OPERATION

TOP PREVIOUS NEXT

Air massage functions with the operations of the pump unit x 1pc, 3-way electromagnetic valve x 1pc, and 2-way electromagnetic valve x 2pcs.

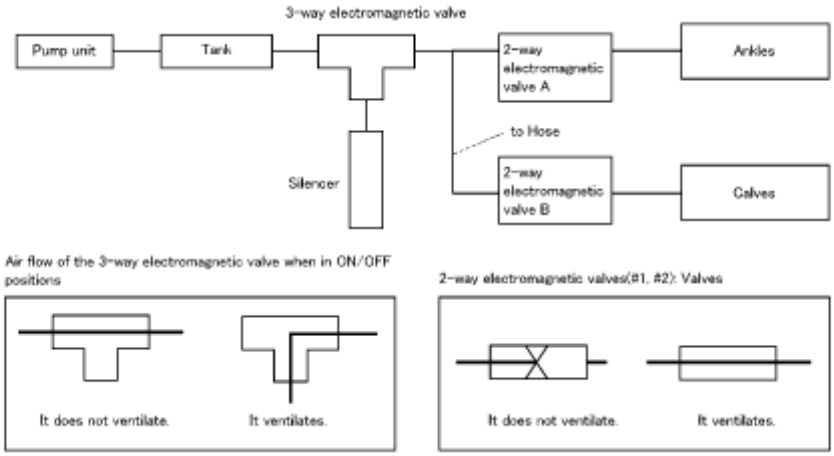

1. Air massage functions with the pump unit and the electromagnetic valves.
2. Every time you press the leg massage button, the modes change from stop - weak - strong - stop.
3. 16-minute timer operates and the massage operation stops.
4. The air pump and the all the electromagnetic valves are off when in the stop mode.
5. The air control function stops when the reclining lift motor operates.

   (The outputs of the air pump and the electromagnetic valves are off: ventilation)

   When the operation resumes after being in off positions, the four-second off period is maintained.

   However, the LED lights on when the leg massage button is on.

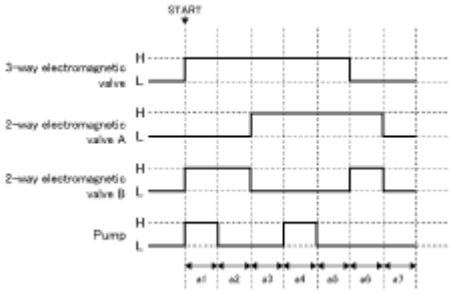

Air pattern

Operation step: 7 steps

Interval: Approx. 30 seconds

a1) Air is pumped in to the ankles. (approx. 5 seconds)

a2) a3) The electromagnetic valves are switched. (approx. 2 seconds)

a4) Air is pumped in to the calves. (approx. 7 seconds)

a5) a6) The electromagnetic valves are switched and the air pressure is maintained.

a7) It ventilates. (approx. 11 seconds)

TOP PREVIOUS NEXT

10.1 Removing the Head rest, Back rest cushion, Arm rest

TOP PREVIOUS NEXT

1. Unzip the zippers and remove the Back cushion with pillow.

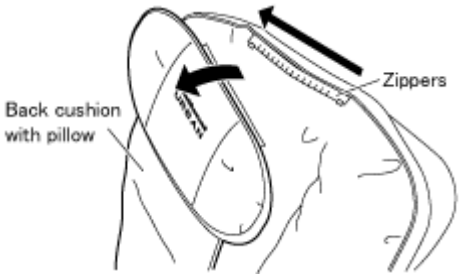

2. Remove nine brush clips on each sides, which fix the Arm rest left and the right, with a slotted screwdriver.

   This procedure is unnecessary so as to remove the Seat.

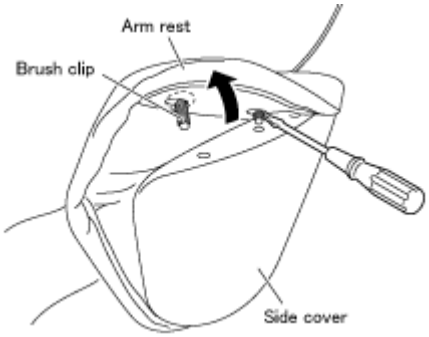

3. Remove three screws on each sides, which fix the Side covers, and remove the Side covers.

   This procedure is unnecessary so as to remove the Seat.

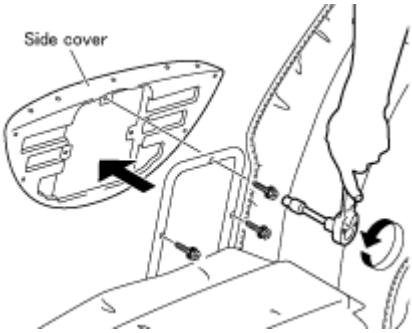

4. Remove eight Push return rivets, which fix the Under cover left and the right, with a crossed screwdriver and remove the Under cover left and the right.

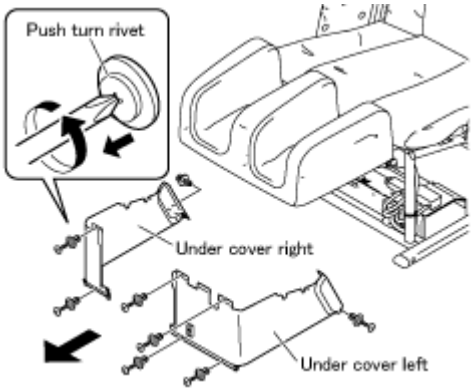

5. Pull out the zipper ends, which connect the Seat and the Ottoman, and cut the insulated tie and remove four Push rivets pushing its center with a screwdriver, etc.

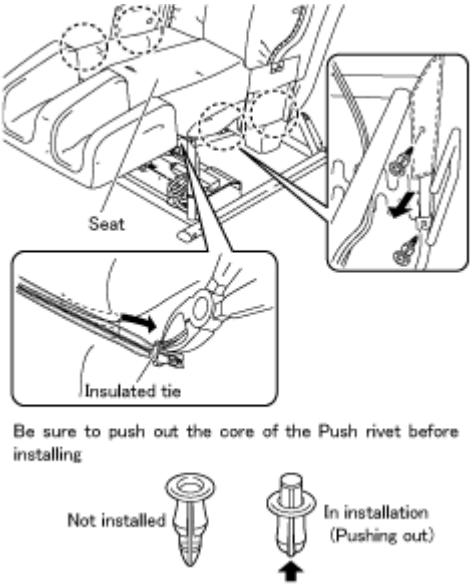

6. Unzip the zippers and the Seat can be taken off.

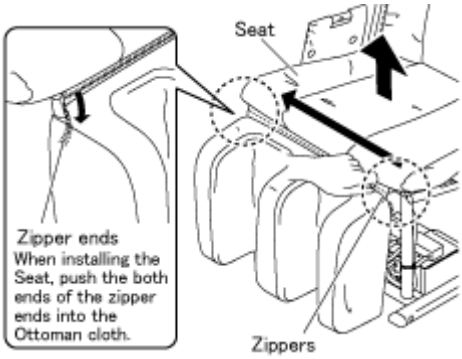

TOP PREVIOUS NEXT

10.2 Removing the Massage mechanism block

TOP PREVIOUS NEXT

1. Lift the Ottoman a little bit and push up the Interlock link and remove it.

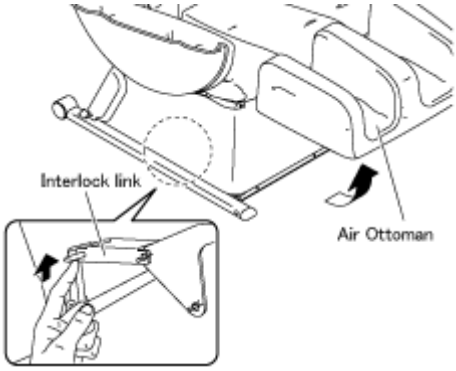

2. Lift the Ottoman a little bit and push up the Interlock link and remove it.

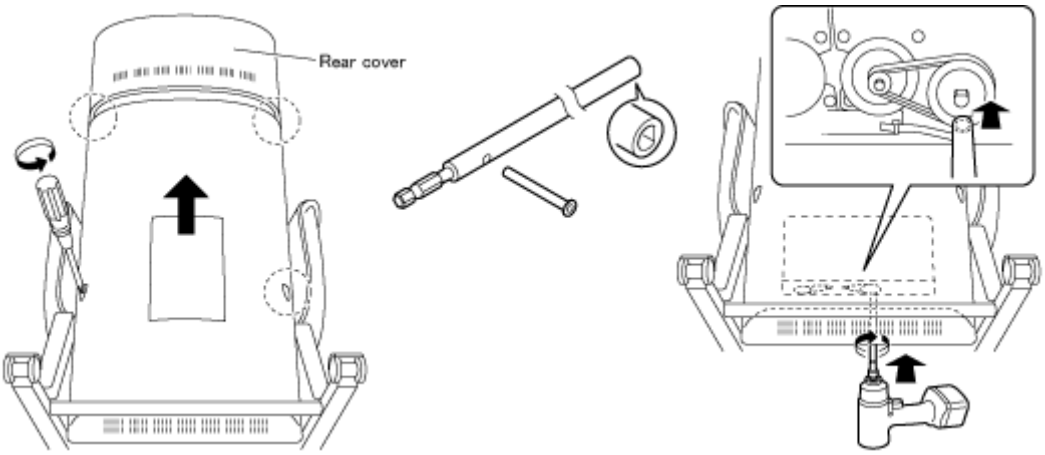

3. Remove three Rail piece installation screws, and remove the Rail piece.

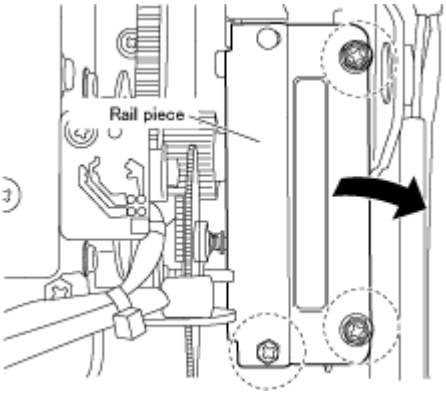

4. Remove four Cover for P.C.B. installation screws, and remove the Cover for P.C.B.

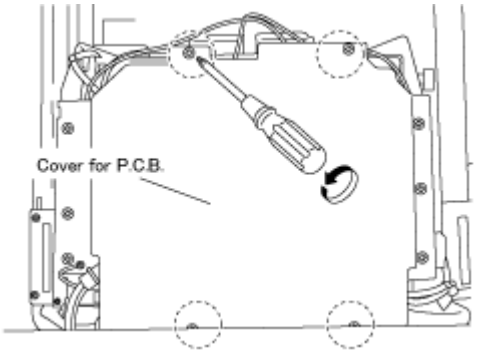

5. Remove the Connecting cord for power supply, one screw, and two connectors.

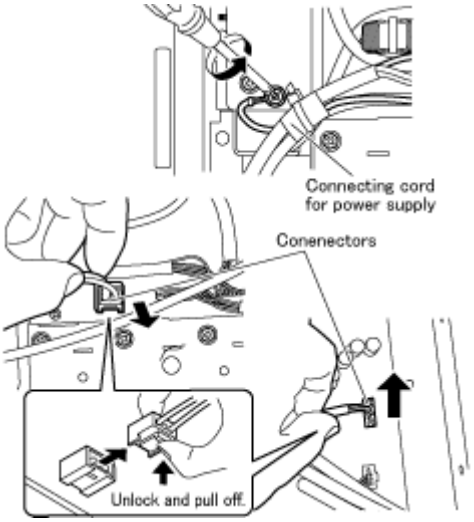

6. Remove two plastic rivets on the Massage mechanism cover and take off the Message mechanism cover and remove the Cover clip.

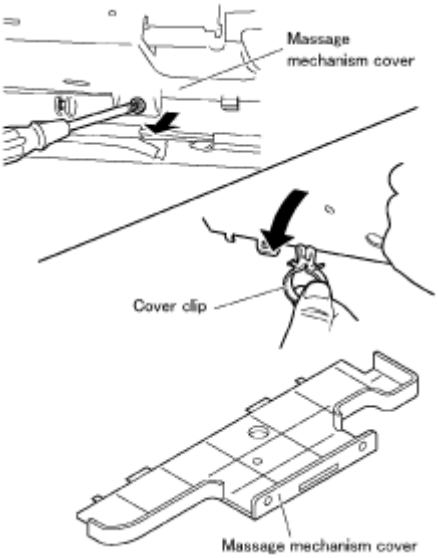

7. Lift up the bottom of the Massage mechanism block as the figure and take it off.

    - Be sure to check if there is more approx. 9cm between each kneading balls because if the distance is short you may not be able to take away the block obstructed by the bottom metal piece of the Rear frame.

If the distance is less than 9cm, adjust the distance moving the Width belt on the right side of the Massage mechanism block using fingers.

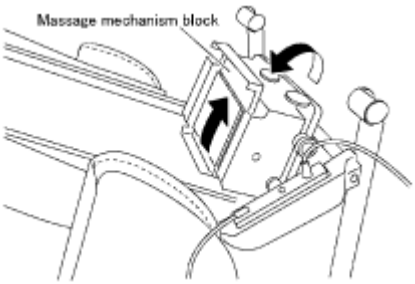

TOP PREVIOUS NEXT

10.3 Removing the parts of the Massage mechanism block

TOP PREVIOUS NEXT

You can work from 1. to 12. without taking away the Massage mechanism block.

1. Remove connectors on the Main circuit board.

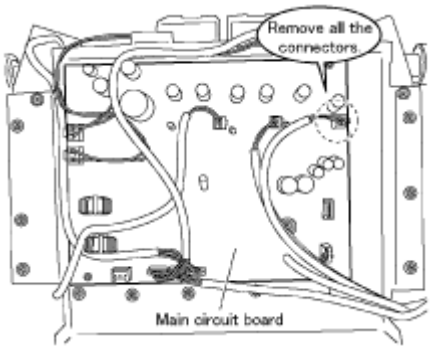

2. Remove the ground wire and two screws.

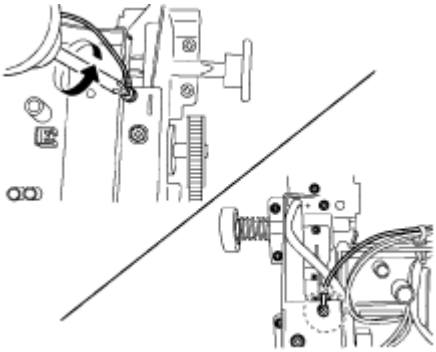

3. Remove two Insulated ties.

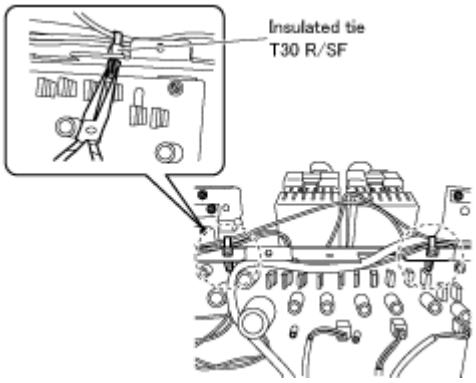

4. Remove two screws and three Circuit board spacers.

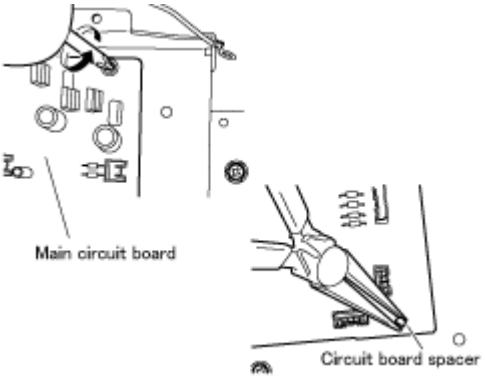

5. Remove 11 screws and take off the Shield panel for P.C.B.

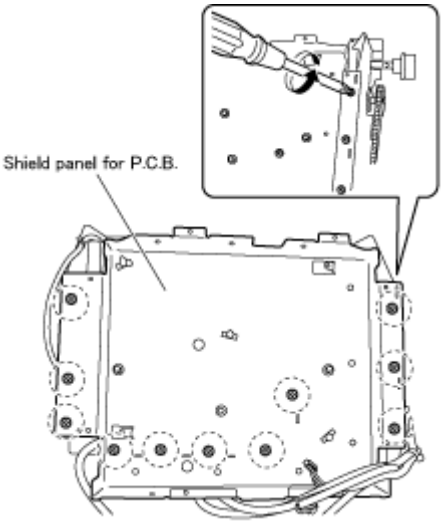

6. Remove the Width belt.

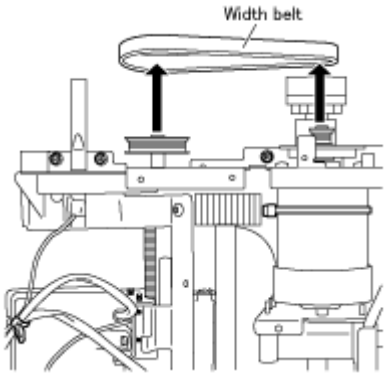

7. Cut off the Insulated ties and remove five screws and disconnect the Intensity driving block holding the Width motor.

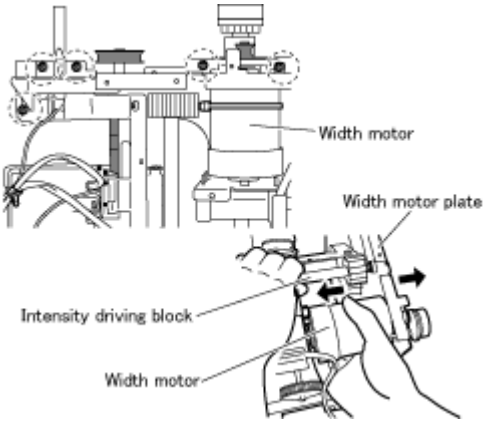

8. Cut off the Insulated tie and unscrew a screw on the Up/down sensor plate and remove the Up/down sensor plate.
    - When you take off the Massage mechanism block directly from the chair, be careful not to damage the Up/down sensor, which may hit the edge of the Back frame.

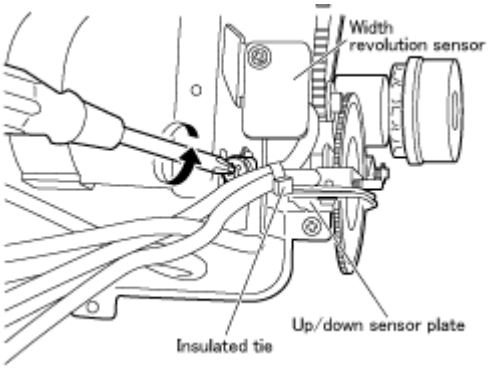

9. Unscrew a screw and take off the Width revolution sensor.

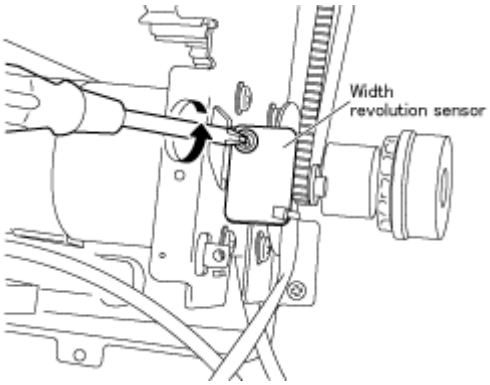

10. Unscrew a screw and unhook the Wire clip and remove the Intensity up/down revolution sensor.

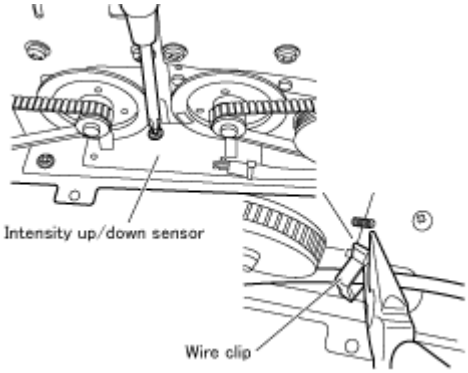

11. Cut off the Insulated tie and unscrew a screw and take off the Intensity plate.

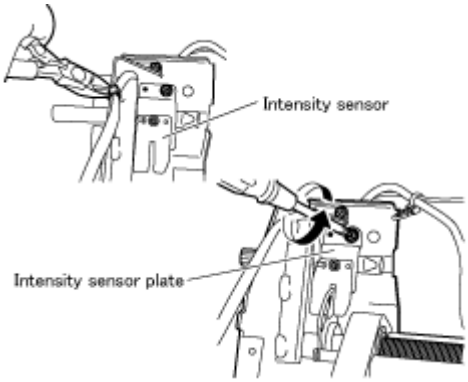

12. Unscrew seven screws and remove the Width driving block. With this condition, you can take off the Kneading ball block.

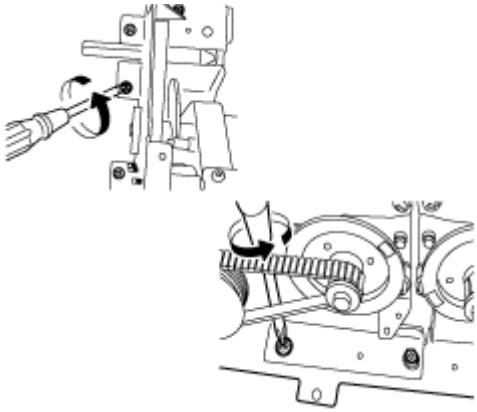

13. Unscrew two screws and remove the Up/down driving block.

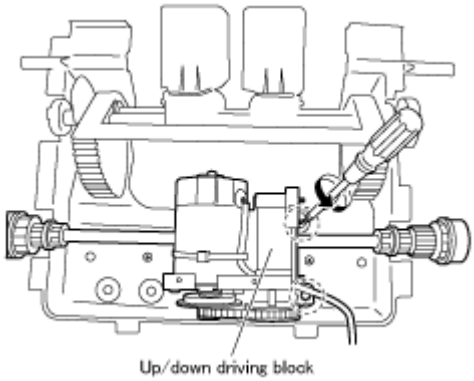

TOP PREVIOUS NEXT

10.3 Removing the parts of the Massage mechanism block

TOP PREVIOUS NEXT

You can work from 1. to 12. without taking away the Massage mechanism block.

1. Remove connectors on the Main circuit board.

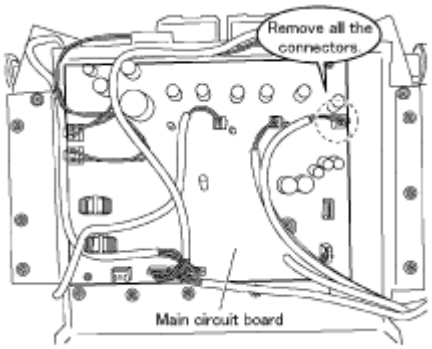

2. Remove the ground wire and two screws.

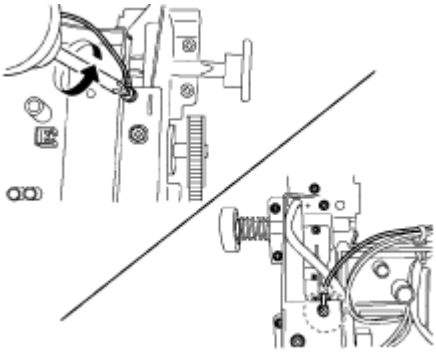

3. Remove two Insulated ties.

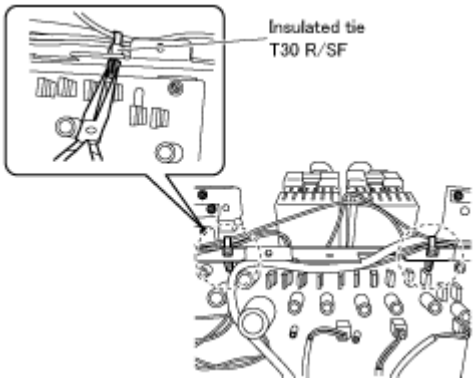

4. Remove two screws and three Circuit board spacers.

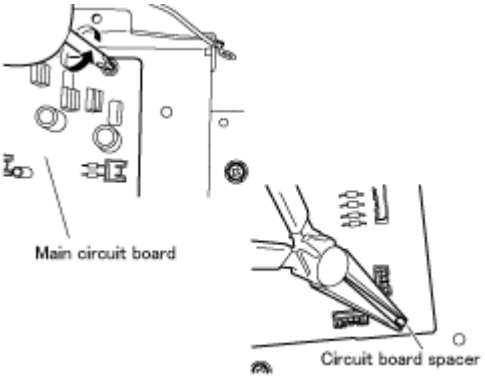

5. Remove 11 screws and take off the Shield panel for P.C.B.

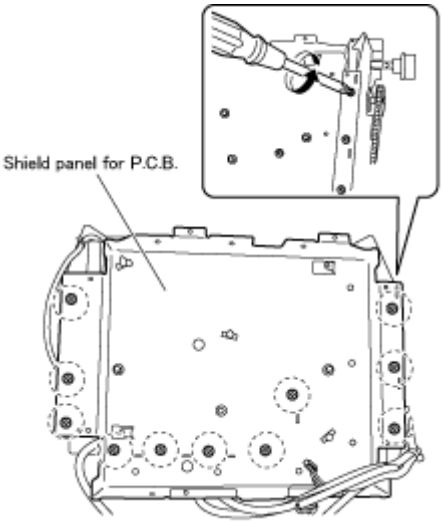

6. Remove the Width belt.

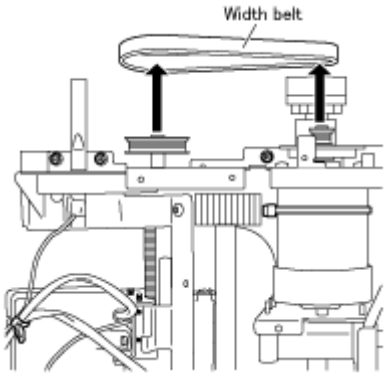

7. Cut off the Insulated ties and remove five screws and disconnect the Intensity driving block holding the Width motor.

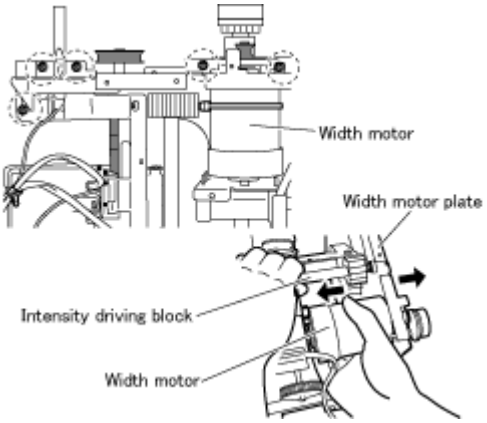

8. Cut off the Insulated tie and unscrew a screw on the Up/down sensor plate and remove the Up/down sensor plate.
    - When you take off the Massage mechanism block directly from the chair, be careful not to damage the Up/down sensor, which may hit the edge of the Back frame.

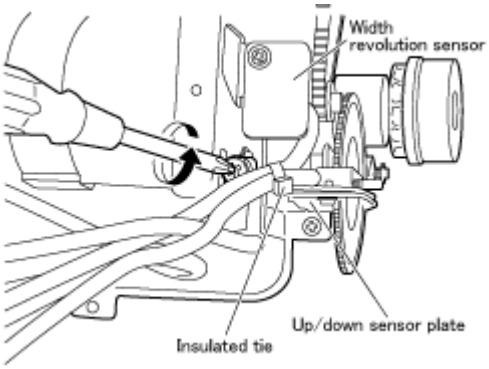

9. Unscrew a screw and take off the Width revolution sensor.

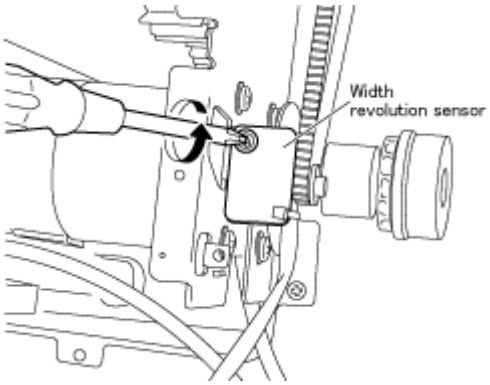

10. Unscrew a screw and unhook the Wire clip and remove the Intensity up/down revolution sensor.

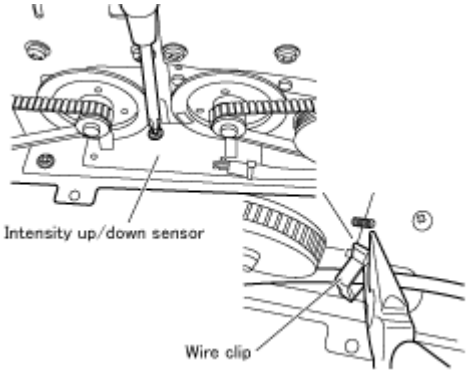

11. Cut off the Insulated tie and unscrew a screw and take off the Intensity plate.

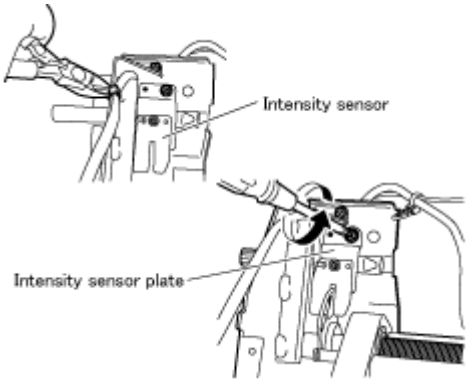

12. Unscrew seven screws and remove the Width driving block. With this condition, you can take off the Kneading ball block.

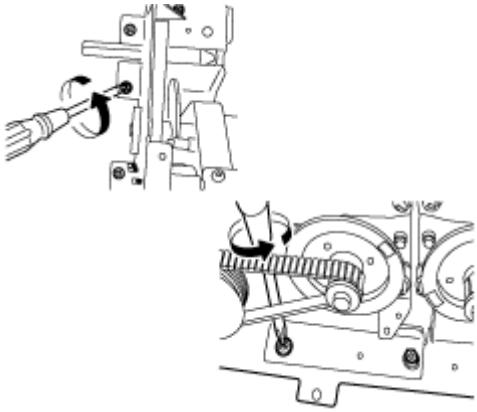

13. Unscrew two screws and remove the Up/down driving block.

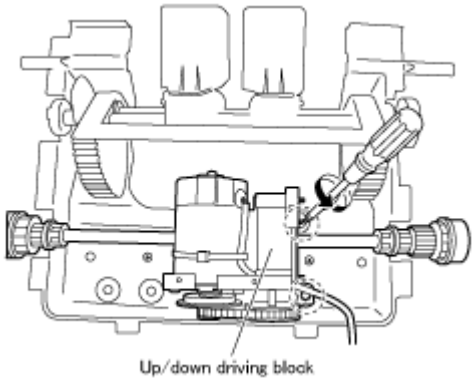

TOP PREVIOUS NEXT

10.4.1 Adjustment of the Up/down sensor gear

TOP PREVIOUS NEXT

When the massager is removed from the chair, the position of the up/down detection gear changes, resulting in a change of the up/down stop position.

When installing the massager on the back frame, be sure to adjust the position with the up/down detection gear.

• Up/down detection gear position adjustment procedure

To make an adjustment, refer to the massager removing method (the back frame is tilted from the chair).

1. Before mounting, the massager on the back frame must be moved down to the lowest position by setting the controller manual operation Massage head adjustment button to DOWN.

2. Install a washer and a spring to the guide roller G in the left side and mount the massager on the lowest position of the back frame.

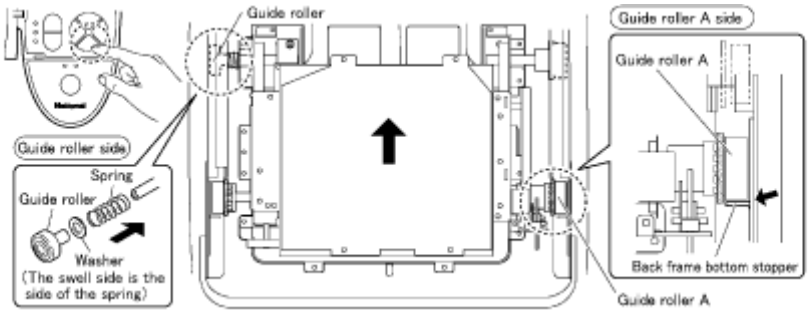

3. Turn the hex nut M6 counterclockwise and move the massager upward.

4. Make sure that the massager has been mounted horizontally by moving the massager to the position shown in the Figure.

   *Unless the massager has been mounted horizontally, an abnormal sound or problem may occur.

5. Move it up to the highest position (until the massager stops) by setting the controller manual operation Massage head adjustment button to up.

6. Peeping into the square hole of the back frame, check the position of the massager to adjust.

   *One thread of the up/down detection gear gives a stroke change of 4mm.

   When the massager has been raised excessively : Turn the up/down detection gear counterclockwise to adjust.

   When the massager has been lowered excessively : Turn the up/down detection gear clockwise to adjust.

   While adjusting the distance between the square hole and Guide roller assy. to 10mm, check by using the up/down adjustment button found on the manual operation panel of the controller.

7. Install the rail piece A and B, and tighten uniformly the set screws (left and right, 3 pcs. each).

8. Using the manual operation of the controller, conduct the rolling operation. Set the massage heads adjustment switch to level 1, and check the up/down stroke.

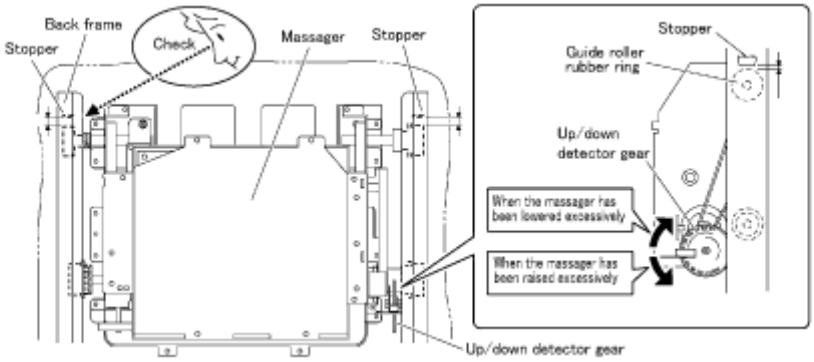

TOP PREVIOUS NEXT

12.1 Main unit

TOP PREVIOUS NEXT

	Q	A
1	When operating the chair, there are various strange noises. Is the chair broken ?	●The massage lounger does serveral massage functions such as kneading, rolling and tapping. The built-in massager block 10kg makes various sounds, none of which mean there is a problem. These sounds come from the normal mechanical operation. Please check and understand the Operation Manual so that these various sounds can be explained.
2	The demo chair I tried before buying did not make strange noises.	●In the case of the demo chair, the noise from the surrounding in the store was loud enough to prevent you from hearing the normal noises from the chair. At home, the noises are more noticeable as the surrounding is quiet.
3	The message wheels stop in the middle of operation. Or, the massager block stops and all the controller lamps begin to blink.	●So that the massager block can move freely up and down, confirm that there are no obstacles in the rear of the chair, including the wall. Also, if the massage wheels encounter a strong counter force, they are designed to stop. ●The motion of the massage wheels (drive pipe rotation) is checked by the micro computer. If the signal of the drive pipe rotation stops for more than 5 seconds, all the LED on the controller will blink and the massager block will stop. ●If the massage wheels stop, and all the lamps on the controller begin to blink, push the ON/OFF button to restart the controller. A load of more than 120kg should be avoided, as the massager block is designed to stop automatically when overloaded.

	Customer's claim	Remedy
1	A squeaking sound between the drive pipe and the up/down shaft due to overload stress.	●Apply the Molycoat grease to the up/down shaft.
2	A squeaking sound caused by the massage wheel and massage wheel cover rubbing against one another.	●Apply silicon spray oil to the whole back of the massage wheel cover. ●Apply silicon oil to the massage wheel surface with a cloth soaked in silicon oil. (If oil is sprayed directly to the massage wheel, it may cause the massage wheel not to work properly.)
3	A squeaking sound from the gears inside the gear box due to a lack of grease.	●Apply the E-paste grease to the inside of the gear box.
4	A discrepancy in the position of the massage wheel up/down and front/rear. 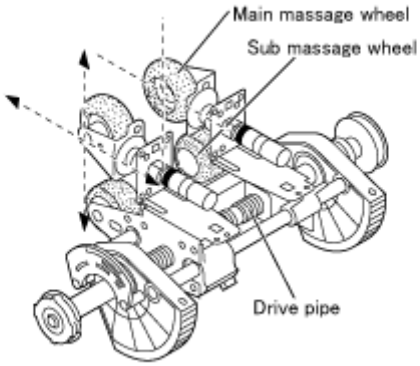 	●The massage block has two main functions, kneading and tapping. These functions are operated by a linkage mechanism and are switched by an electrial clutch system. The tapping function is operated by the rotation of the tapping shaft. This tapping shaft is offset by approximately 30mm on the left and right massage wheels. This tapping shaft will stop at a random position when the massage is functioning. Because of this, the positions of the left and right massage wheels have a maximum discrepancy of 10mm up/down and front/rear. This is normal, and there is no need to be concerned.

TOP PREVIOUS NEXT

12.2 Controller/Massage mechanism block

TOP PREVIOUS NEXT

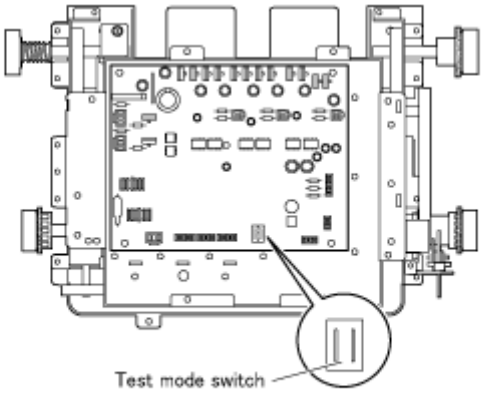

Press the test switch of the main circuit board, and check the massage block operation.

・Operation test method

1. Turn on the On/off switch on the Power source switch box.
2. Do not tun on the On/off button on the Controller.
3. Short-circuit the Test mode switch in the figure, then the operation test method starts.

●After finishing the operation test method, turn off the On/off switch on the Power switch box, then turn it on again to start the normal operation.

・Contents of Massage block test operation

1. The Massage block protrudes at its maximum width and at its weakest position and operates the back rolling.
2. The Massage block moves to the highest position, and operates the back rolling to the lowest position.
3. The Massage block moves to the middle with the back rolling, and operates the Shiatsu massage and the Swedish massage, and Kneading at one stroke each.
4. The Massage block changes the intensity mode from the strongest to the weakest while tapping.
5. The Massage block changes the width of the massaging from the widest to the narrowest to the widest while operating the Swedish massage.
6. The Massage block moves to the lowest position operating back rolling + kneading +vibration.
7. The Massage block moves to the highest position operating back rolling + Swedish.
8. The Massage block retracts.

●The retracting position will be the lowest, the widest, and the weakest.

●If something abnormal happens in the Massage block test mode such as the motor stall, the Massage block test mode ends, however the Controller test mode continues.

・Contents of Controller test operation

1. Start the Massage block test mode and at the same time confirm that all the LEDs of the Controller light up and it buzzes twice.
2. Push all buttons in turn and confirm that each LEDs light up.

You can check the data connection from the Chair to the Controller and from the Controller to the Chair in the Controller test mode.
If there is something wrong with the data transmission of the Controller, LEDs do not light nor blink.
In this case, there are the possibilities that he Controller, the Connecting cord for controller, and the Connecting cord for power supply are disconnected.

Checking procedure	Checking method		Remedy
No motor operation	*Upon turning on the Controller on/off switch, check that the operation lamp (red) of the Controller lights.		
Check the Power cord.	Check that the Power cord is not disconnected.	NG	Replace the Power cord.
OK			
Check the Fuses.	Check that the Fuses are not blown out.	NG	Replace the Fuses.
OK			
Check the Micro switch.	Check that the Micro switch connects properly.	NG	Replace the Micro switch
OK			
Check the Connecting cord for power supply A	Check that the Connecting cord for power supply A is not disconnected between each lead wires.	NG	Replace the Connecting cord for power supply A
OK			
Check the Sub circuit board	Check the voltage between ① and ③ of the red connector (CN111). There should be about AC100V.	NG	Replace the Sub circuit board.
OK			
Check the Power source transformer.	Check the transformer input and output voltage. ・Input voltage: There should be AC100V between ① and ③ of white connector (CN106) in the sub circuit board. ・Output voltage: Output side of transformer.	NG	Replace the Power source transformer.
OK			
Check the Connecting cord for power source.	Check that the Connecting cord for power supply A is not disconnected between each lead wires. There should be AC100V between ① and ③ of red connector (CNlf2) in the Main circuit board. Check the Connecting cord for power source by bending.	NG	Replace the Connecting cord for power source
OK			
Check the motor.	Check the resistance of the motor coil. If there is approx. 35Ω between the Intensity motor green2P(CN11), the Width motor yellow2P(CN9), and the Up/down motor red2P(CN10)①to②.	NG	Replace the Connecting cord for power source
OK			
Check the Main circuit board.	Check the short circuit of FET for motor operation. It is OK if it is 1MΩ or more between D to S, and between D to G.	NG	Replace the Main circuit board.
No tapping(vibrating) operation			
Check the Width driving block	It is OK if it is approx. Sollenoid 13Ω between ① to ③ in the CN4 and CN5 in the Main circuit board.	NG	Replace the Width driving block or the Sollenoid block.

Connector No.(color)	Pin No.	Output voltage
CN105 (white)	①-③	AC12±1V

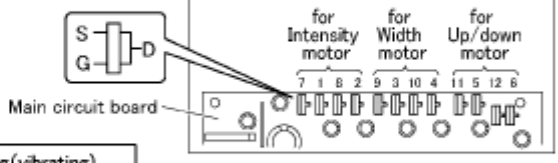

for Intensity motor	FET7,1,8,2
for Width motor	FET9,3,10,4
for Up/down motor	FET11,5,12,6

Checking procedure	Checking method	Remedy
The massage block moves, but after a few seconds the controller LED begins to blink and then the massage block stops.		
Check the following parts: • Intensity motor • Width motor • Up/down motor	After Controller was changed to manual operation, check the output voltage between the following connectors in main circuit board. • Intensity motor • Width motor • Up/down motor } Output voltage about DC 140±5V	NG → Replace the Main circuit board.
	OK ↓ The resistance on each motors should be approx. 35Ω.	NG → Replace the defective motor.
Check the following parts: • Intensity sensor • Width sensor • Protrusion sensor • Width revolution sensor • Intensity/Up/down revolution sensor	OK ↓ Check the short circuit of FET for motor operation. Check the resistance between D-S, D-G. If it is 1MΩ or more, it is OK.	NG → Replace the Main circuit board.

Check whether the signal of each detector and detection print board is in order ("ON"/"OFF").Check the output voltage of the terminals that accompany the opration position of the adjustment plate and up/down detector gear.
*Check using the manual operation of the Controller.

sensor	sensor measurement terminal (Pin No. / Lead wire color / Ground)	Output voltage of the sensor
Intensity sensor	sensor - (1) ④ (Orange) - Ⓖ	Check if there is the output voltage of high-low(5V-0V) by the tester. (It is advisable to use the analog tester.)
Up/down sensor		
Width sensor	sensor - (2) ⑤ (Yellow) - Ⓖ	
Width revolution sensor		
Intensity/Up/down revolution sensor	sensor - (3) ⑥ (Green) - Ⓖ	

NG ↓ Replace the Sensor and the sensor print board.

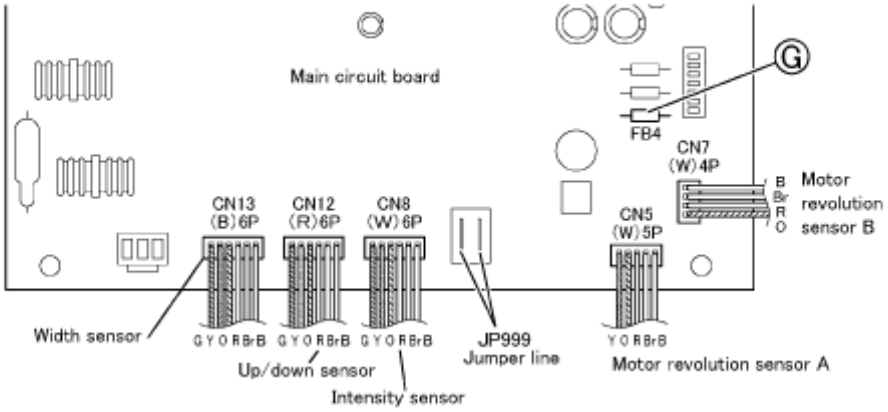

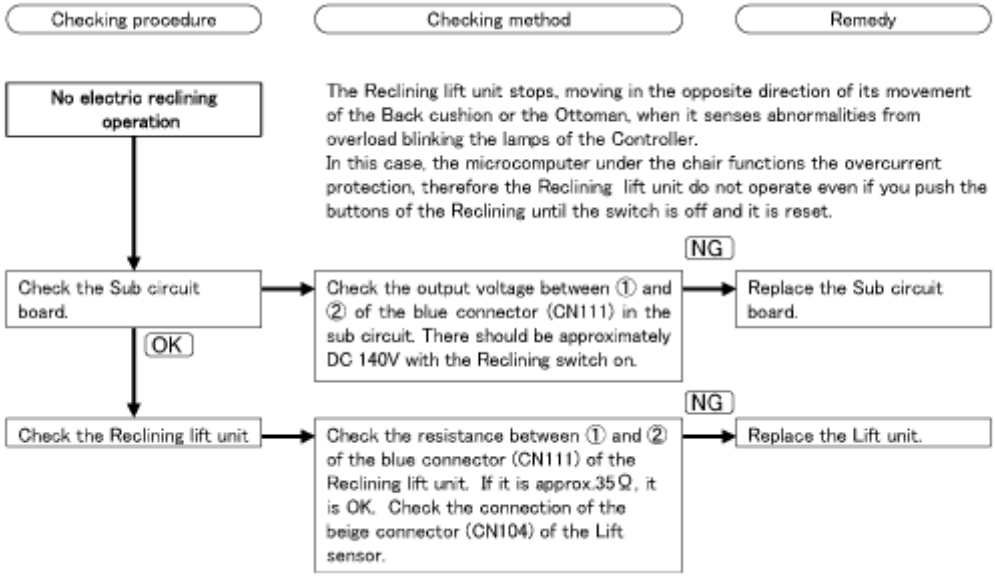

TOP PREVIOUS NEXT

12.3 Air bags

TOP PREVIOUS NEXT

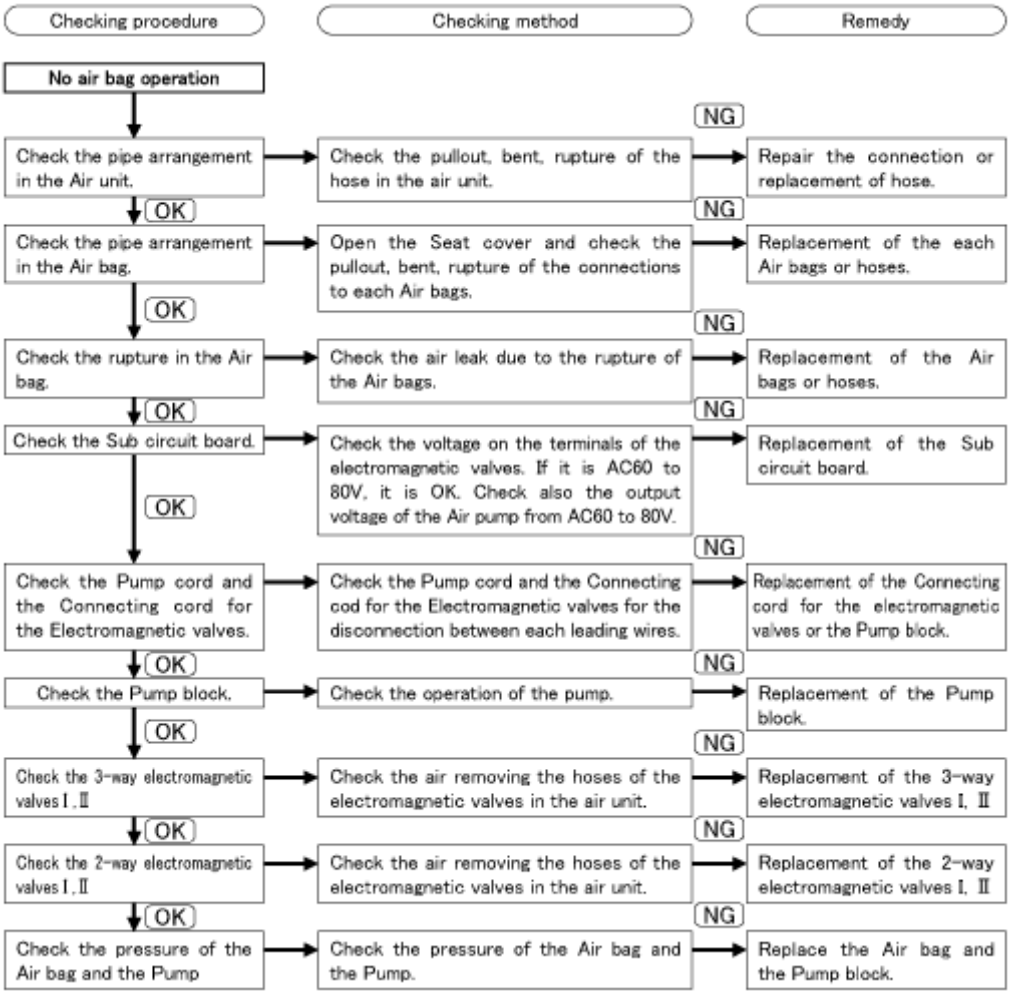

TOP PREVIOUS NEXT

13.1 Air bag and the Pump block

TOP PREVIOUS NEXT

1. Follow the procedure 10-2 Removing the Head rest, Back rest cushion, Arm rest 4.
2. Disconnect either hose of the 2-row hoses.

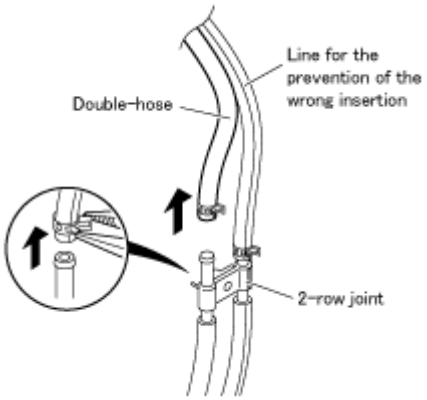

3. Cut the Insulated tie of the Hose plug and remove the Hose plug.

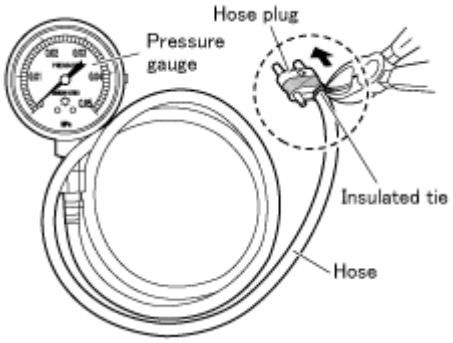

4. Insert the Hose of the Pressure gauge to the T-shape joint.

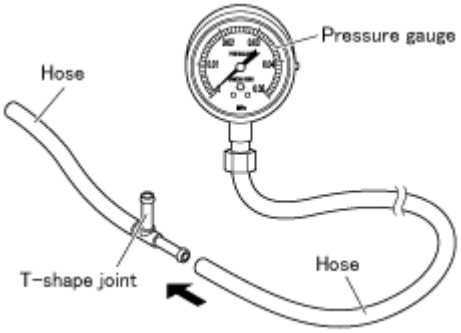

5. Insert the hose that you removed in the 2. to the T-shape joint and the other end to the 2-row joint.

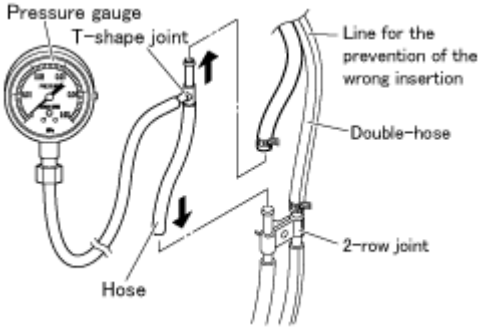

6. Push the On/off button and push the Leg massage button.

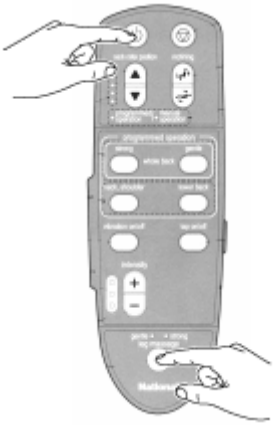

7. Check the pressures at three levels by the intensity adjustment of the Controller. If the pressure values are in the range of the tolerance, the Air bag and the Pump unit are normal.

   If the pressure values are low, check the pressure of the Pump unit itself and judge the Air bag and the Pump unit.

   If the pressure values are low, check the pressure of the Pump unit itself and judge the Air bag and the Pump unit.

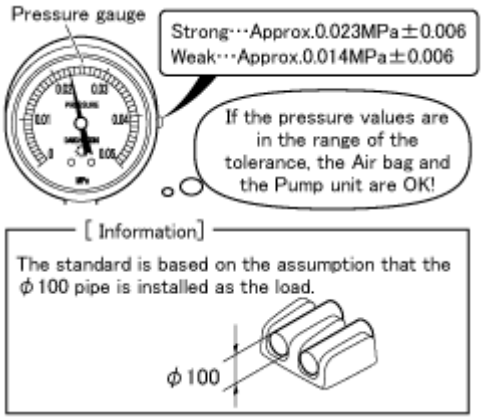

TOP PREVIOUS NEXT

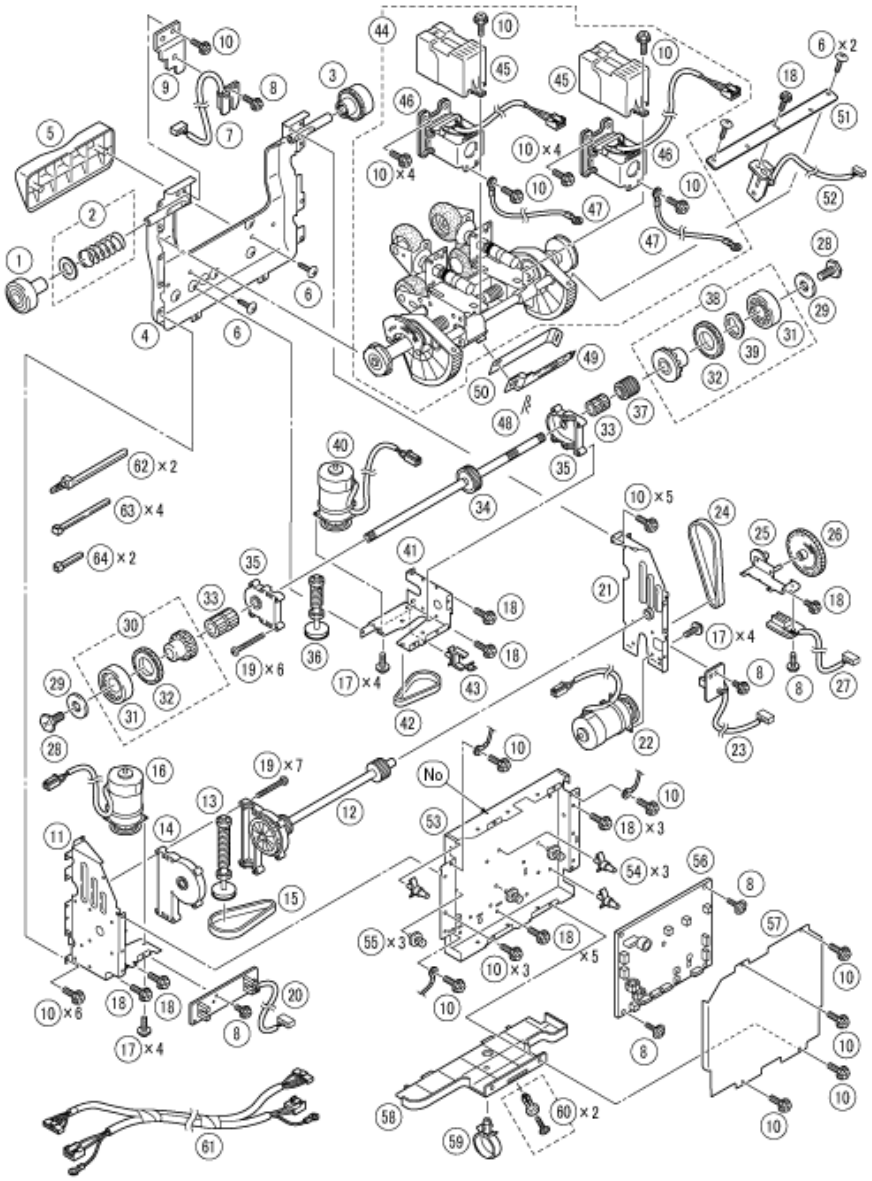
No

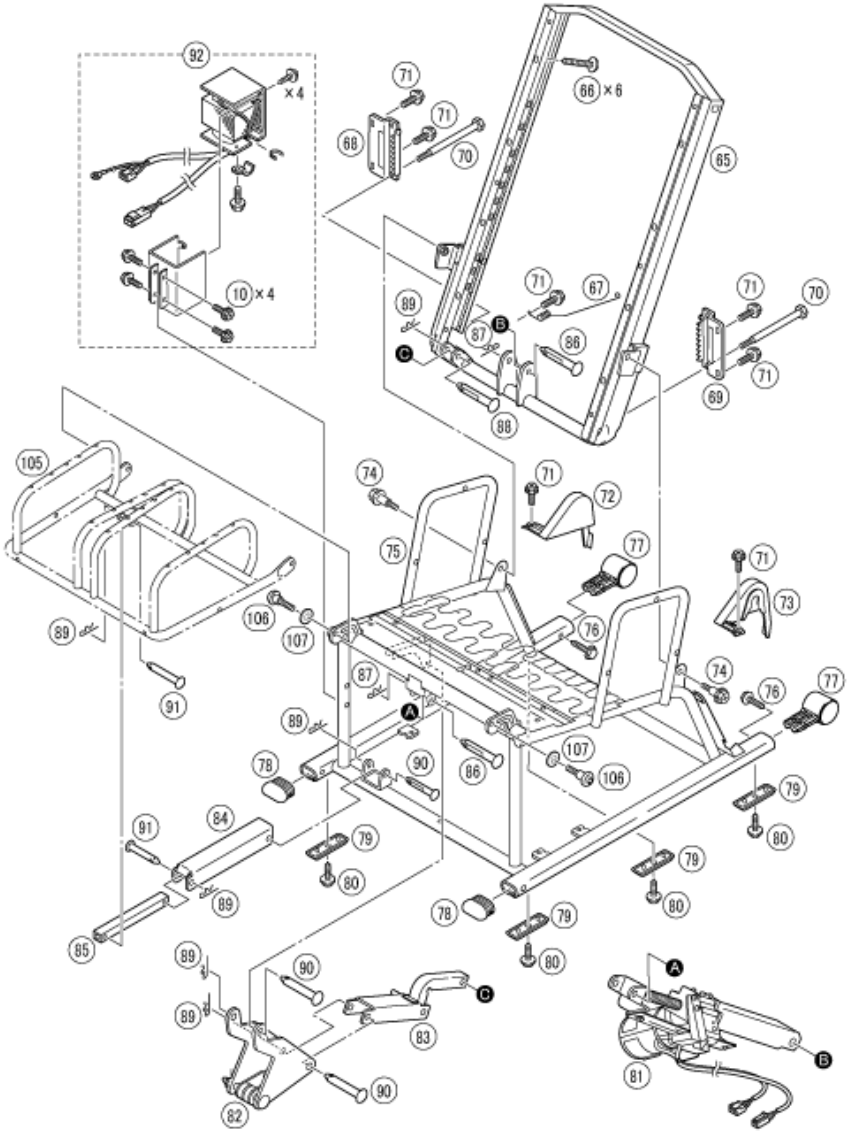
92
×4
10 ×4
71
66 ×6
68
70
65
67
89
87
86
88
69
105
74
72
75
77
73
106
107
76
91
78
90
84
79
80
85
83
82
81
A
B
C

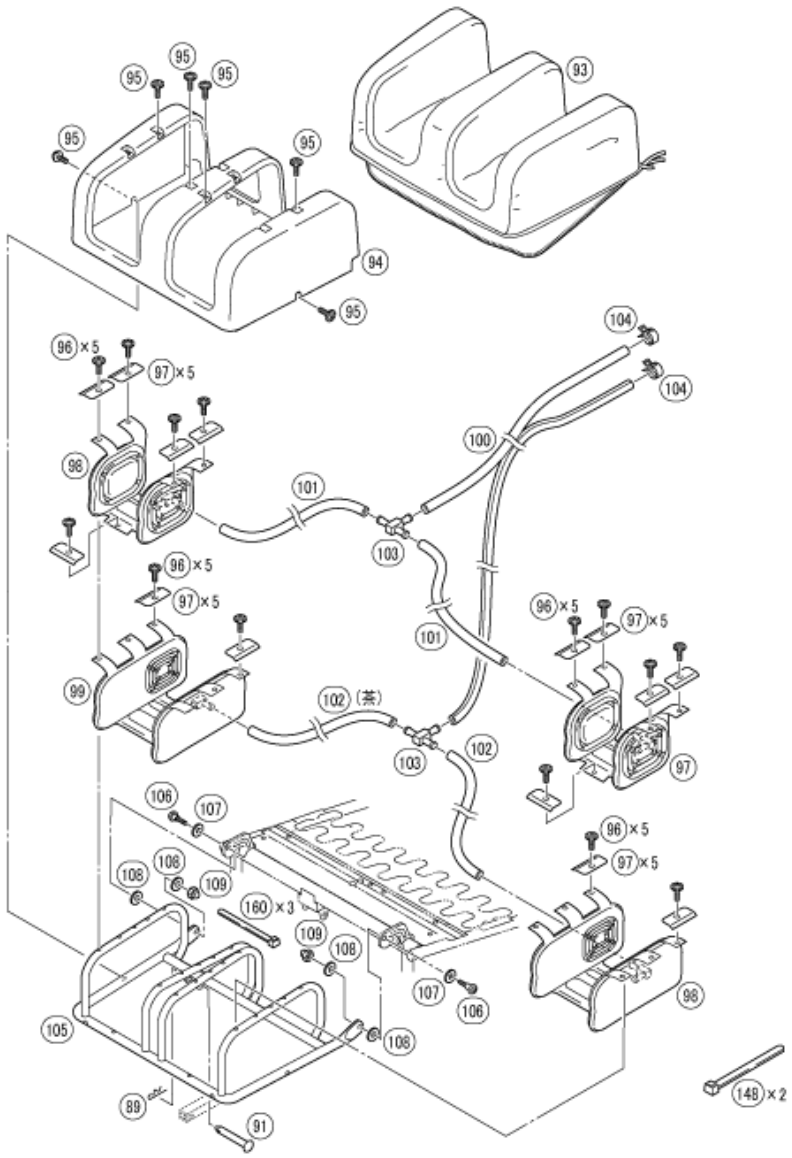
95
93
94
96 × 5
97 × 5
98
104
100
101
103
99
102 (茶)
102
97
106
107
108
109
160 × 3
105
89
91
148 × 2

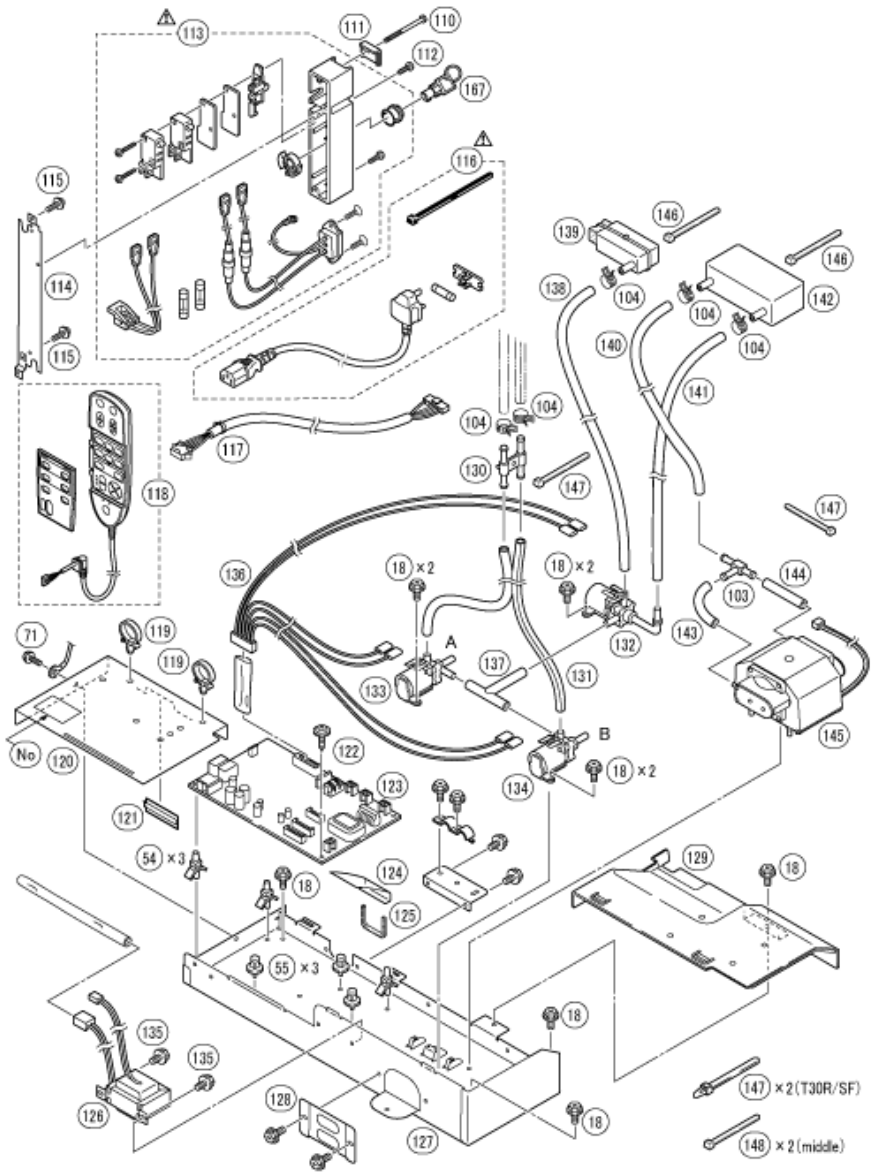
113
111
110
112
167
116
115
114
115
139
146
146
138
104
104
142
140
104
141
104
104
117
130
147
118
147
136
18 × 2
18 × 2
144
103
71
119
119
A
132
143
137
133
131
145
No
120
122
B
18 × 2
123
134
121
54 × 3
124
129
18
18
125
55 × 3
18
135
135
147 × 2 (T30R/SF)
126
128
127
18
148 × 2 (middle)

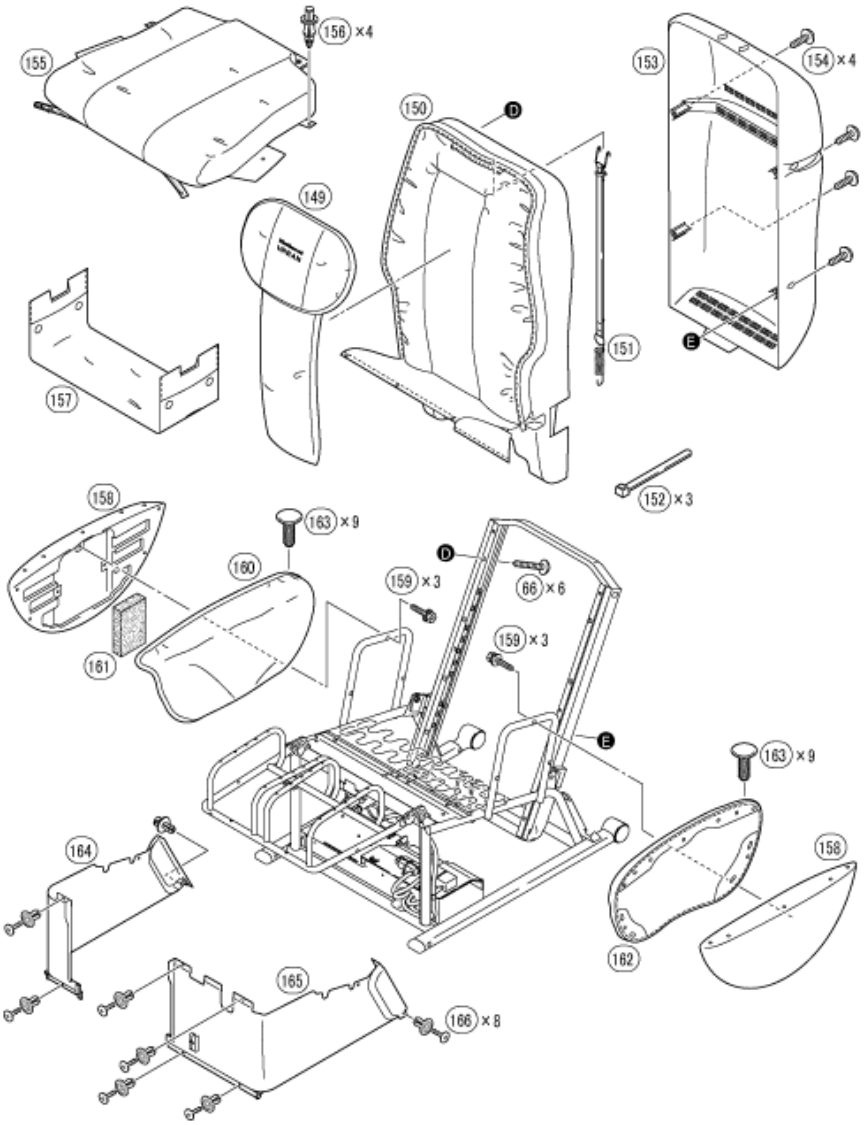
155
156 ×4
153
154 ×4
150
D
149
151
E
157
152 ×3
158
163 ×9
160
159 ×3
66 ×6
D
159 ×3
161
E
163 ×9
164
158
162
165
166 ×8

15 REPLACEMENT PARTS LIST

TOP PREVIOUS

NOTES: As long as the destinations or the Massage loungers to which each parts should be installed are not specified, each parts can be installed to any EP1260 Massage loungers.

Ref.No.	Part No.	Part Name & Description	Remarks		Per Unit
1	WEP2200L1967	GUIDE ROLLER			1
2	WEP2200L0167	GUIDE ROLLER SPRING SET			1
3	WEP760L0157	GUIDE ROLLER ASSEMBLY			1
4	WEP2200L0047	MAIN FRAME			1
5	WEP2200L0067	PROTECTION COVER			1
6	WEP2200L9697	SCREW (T4-16)			4
7	WEP1260L2268	INTENSITY ADJUSTMENT SENSOR			1
8	WEP590L6017	SCREW (CUP.S.K3-6)			4
9	WEP2200L0057	INTENSITY SENSOR PLATE			1
10	WEP2000L9567	SCREW (CUP.S.K4-10)			1
11	WEP1260L0008	INTENSITY MOTOR PLATE			1
12	WEP2200L1347	INTENSITY DRIVE SHAFT			1
13	WEP2200L1417	INTENSITY WORM SHAFT			2
14	WEP2200L1787	INTENSITY GEAR BOX A			1
15	WEP2200L1127	INTENSITY BELT			1
16	WEP1260L1008	INTENSITY MOTOR			2
17	WEP592AL9597	SCREW(CUP.S.K5-10)			2
18	WEP573L6627	SCREW (CUP.S.K4-6)			2
19	WEP2200L9677	SCREW (M4-40)			1
20	WEP2200L2197	REVOLUTION SENSOR			1
21	WEP1260L0018	WIDTH MOTOR PLATE			1
22	WEP1260L1018	WIDTH MOTOR			1
23	WEP2200L2207	WIDTH REVOLUTION SENSOR			1
24	WEP2200L1107	WIDTH BELT			1
25	WEP2200L1847	UP/DOWN SENSOR PLATE			4
26	WEP1061L1397	UP/DOWN SENSOR GEAR			1
27	WEP2200L2187	UP/DOWN SENSOR			1
28	WEP596L6057	UP/DOWN SHAFT BOLT			1
29	WEP579L3530	FITTING			1
30	WEP2200L1447	PINION B BLOCK			5
31	WEP545H1937	GUIDE ROLLER B			1
32	WEP578AL0317	RUBBER RING			1
33	WEP2200L0337	UP/DOWN SHAFT B			1
34	WEP2200L0377	UP/DOWN SHAFT			2
35	WEP2200L1797	UP/DOWN GEAR BOX			1
36	WEP2200L1427	UP/DOWN WORM SHAFT			1
37	WEP2200L0327	UP/DOWN SENSOR GEAR			1
38	WEP2200L1457	PINION C BLOCK			3
39	WEP2200L1907	PINION C SPRING			1
40	WEP1260L1028	UP/DOWN MOTOR			1
41	WEP1260L0028	UP/DOWN MOTOR PLATE			1
42	WEP2200L3417	UP/DOWN BELT			1

43	WEP2200L0537	WIRE CLIP 1A58			1
44	WEP1260L4608	WIDTH DRIVING BLOCK			1
45	WEP1260L3108	SOLLENOID COVER			1
46	WEP1260L4188	SOLLENOID BLOCK			1
47	WEP1260L2948	GROUND WIRE			1
48	WEP1004S0358	SNAP PIN SSP-5			1
49	WEP2200L0478	WIDTH SENSOR PLATE			1
50	WEP2200L3047	WIDTH SENSOR GREASE COVER			1
51	WEP2200L3547	WIDTH SENSOR PLATE B			2
52	WEP1260L2278	WIDTH SENSOR			2
53	WEP2200L0037	P.C.B.PLATE			2
54	WEP2110L0517	CIRCUIT BOARD SPACER			1
55	WEP567ED3467	BUSH C FOR P.C.B			1
56	WEP1260L2108	MAIN CIRCUIT BOARD W/COMPONENT			1
57	WEP2200L0247	COVER FOR P.C.B.			1
58	WEP2200L0547	MASSAGE MECHANISM COVER			1
59	WEP1010L0598	COVER CLIP			1
60	WEP2110L0427	PLASTIC RIVET 21M2			1
61	WEP1260L2058	CONNECTING CORD FOR POWER SUPPLY			2
62	WEP005W8537	INSULATED TIE (MEDIUM T30/SF)			1
63	WEP004W8517	INSULATED TIE (MEDIUM)			1
64	WEP004W8507	INSULATED TIE (SMALL)			2
65	WEP1061L0087	BACK FRAME			1
66	WEP757L9687	SCREW (T4-16)			1
67	WEP1800L0687	CORD WIRE			1
68	WEP1061L0767	RAIL PIECE RIGHT			1
69	WEP1061L0777	RAIL PIECE LEFT			2
70	WEP2110L6347	SCREW (M4-56.2)			1
71	WEP2000L9567	SCREW (CUP.S.K4-10)			1
72	WEP1061K3157	HINGE COVER RIGHT			1
73	WEP1061K3167	HINGE COVER LEFT			2
74	WEP2200S6017	BOLT			1
75	WEP1061K0097	UNDER PIPE			1
76	WEP2005K6537	SCREW (6ANGLE.M5-16)			1
77	WEP1061K3907	CASTOR			3
78	WEP2110K3187	PIPE END			1
79	WEP578K3377	SEAT PLATE			1
80	WEP760N9607	WASHER-HEAD TAPPING SCREW (K4-10)			1
81	WEP1260L1528	OTTOMAN LIFT UNIT			1
82	WEP1061L1547	OTTOMAN ROLLER LINK			1
83	WEP1061L1587	OTTOMAN INTERLOCK LINK			1
84	WEP1061L1597	OTTOMAN LINK A			1
85	WEP1061L1607	OTTOMAN LINK B			1
86	WEP2200L0907	HINGE PIN LARGE			2
87	WEP589L0351	SNAP PIN LARGE			2
88	WEP2000L0937	HINGE PIN D			1
89	WEP585H0368	SNAP PIN			6
90	WEP2100L0417	OTTOMAN LIFT PIN LONG			3
91	WEP2200L0387	FRONT SHAFT			2
92	WEP1260L2238	TRANSFORMER INSTALLATION BLOCK (FOR TAIWAN)			1
92	WEP1260L2239	TRANSFORMER INSTALLATION BLOCK (FOR EP1260K400,KOREA ,CHINA)			1

93	WEP1260K3757	AIR OTTOMAN COVER			1
94	WEP2200L0557	OTTOMAN COVER			1
95	WEP596L9567	SCREW (CUP.S.K4-10)			6
96	WEP596L9577	SCREW (CUP.S.K4-16)			14
97	WEP2200L0587	AIR BAG PLATE			14
98	WEP2200L0847	AIR BAG SMALL			2
99	WEP2200L0827	AIR BAG LARGE			2
100	WEP2200L0687	2-ROW HOSE			1
101	WEP2200L0697	HOSE A			2
102	WEP2200L0707	HOSE B			2
103	WEP2200L0127	T-SHAPED JOINT 2			2
104	WEP2800L0477	HOSE CLAMP			5
105	WEP2200L0347	OTTOMAN PIPE			1
106	WEP1260L6808	HINGE PIN B			2
107	WEP757L6987	POLYETHYLENE WASHER			2
108	WEP2000L6987	FLAT WASHER			4
109	WEP2100L6937	U NUT			2
110	WEP1260L6109	SCREW (S.K3-45)			1
111	WEP2110H3127	BUSHING COVER			1
112	WEPT211K9087	TAPPING SCREW (K3-10)			1
113	WEP2110K2008	POWER SOURCE SWITCH BLOCK			1
114	WEP1061L0077	POWER SOURCE BOX LID			1
115	WEP1061L6627	SCREW (CUP.S.K4-6)			2
116	WEP1260L2068	POWER CORD (TAIWAN)			1
116	WEP1260L2078	POWER CORD FOR EP1260K400			1
116	WEP1260L2918	POWER CORD (KOREA)			1
116	WEP1260L2928	POWER CORD (CHINA)			1
117	WEP1260L2958	CONNECTING CORD FOR CONTROLLER			1
118	WEP1260K4458	CONTROLLER BLOCK (TAIWAN)			1
118	WEP1260K4459	CONTROLLER BLOCK FOR EP1260K400			1
118	WEP1260K4451	CONTROLLER BLOCKÅiKOREA)			1
118	WEP1260K4452	CONTROLLER BLOCK (CHINA)			1
119	WEP2000L0717	ROD HOLDER C			2
120	WEP2110L0267	UNDER BOX TOP/RIGHT			1
121	WEP2110L3758	EDGE GUARD TOP			1
122	WEP2000L6017	SCREW (CUP.S.M3-5)			1
123	WEP1260L2118	SUB CIRCUIT BOARD			1
124	WEP2110L0227	HEATPROOF SHEET			1
125	WEP2110L3527	EDGE GUARD			1
126	WEP1260L2638	POWER SOURCE TRANSFORMER			1
127	WEP1260L3517	UNDER BOX BOTTOM			1
128	WEP1260L3137	PROTECTION BOARD FOR HOSE			1
129	WEP1260L0277	UNDER BOX TOP/LEFT			1
130	WEP2200L0147	2-ROW JOINT			1
131	WEP1260L0687	2-ROW HOSE G			1
132	WEP2200L2457	3-WAY ELECTROMAGNETIC VALVE			1
133	WEP2200L2447	2-WAY ELECTROMAGNETIC VALVE A			1
134	WEP2200L2437	2-WAY ELECTROMAGNETIC VALVE B			1
135	WEP578L9537	SCREW (CUP.S.K4-8)			2
136	WEP2200L2907	CONNECTING CORD FOR ELECTROMAGNETIC VALVE			1
137	WEP2200L0797	T-SHAPED HOSE			1

138	WEP1260L0667	HOSE BROWN			1
139	WEP1260L0257	SILENCER			1
140	WEP1260L0677	HOSE BLACK			1
141	WEP1260L0807	HOSE GRAY			1
142	WEP1260L0287	SURGE TANK			1
143	WEP1260L0727	HOSE PURPLE 140			1
144	WEP1260L0737	HOSE PURPLE 45			1
145	WEP2200L4477	PUMP UNIT			1
146	WEP005W8527	INSULATED TIE (LARGE)			3
147	WEP005W8537	INSULATED TIE (MEDIUM T30/SF)			2
148	WEP005W8517	INSULATED TIE (MEDIUM)			4
149	WEP1061K3617	BACK CUSHION WITH PILLOW			1
150	WEP1061K3658	MASSAGE WHEEL COVER			1
151	WEP1061L0857	CENTER BELT			1
152	WEP005W8527	INSULATED TIE (LARGE)			3
153	WEP1260K3108	REAR COVER (TAIWAN)			1
153	WEP1260K3118	REAR COVER (FOR EP1260K400)			1
153	WEP1260K3128	REAR COVER (KOREA)			1
153	WEP1260K3138	REAR COVER (CHINA)			1
154	WEP2200L9697	SCREW (T4-16)			4
155	WEP1061K3687	SEAT			1
156	WEP2010L0517	RIVET			4
157	WEP1061L3637	SEAT COVER			1
158	WEP1061K3767	SIDE COVER			2
159	WEP1061L6007	SCREW (6ANGLE.M5-30)			6
160	WEP1061K3697	ARMREST RIGHT			1
161	WEP1061L3657	ARM PIPE CUSHION			1
162	WEP1061K3707	ARMREST LEFT			1
163	WEP1061L0487	BRUSH CLIP 5347			18
164	WEP1061K3777	UNDER COVER RIGHT			1
165	WEP1061K3787	UNDER COVER LEFT			1
166	WEP596K0457	RIVET			8
167	WEP589S3289	KEY			1
	WEP1260L8008	PACKAGING (TAIWAN, KOREA)			1
	WEP1260L8008	PACKAGING (FOR EP1260K400)			1
	WEP1260L8028	PACKAGING (CHINA)			1
	WEP1260L8108	MANUALS (TAIWAN)			1
	WEP1260L8518	MANUALS (FOR EP1260K400)			1
	WEP1260L8538	MANUALS (KOREA)			1
	WEP1260L8548	MANUALS (CHINA)			1
	WEP1260L4008	MASSAGE MECHANISM BLOCK			1

TOP PREVIOUS