Order Number KAD1704001CE

Service Manual

Meat Grinder

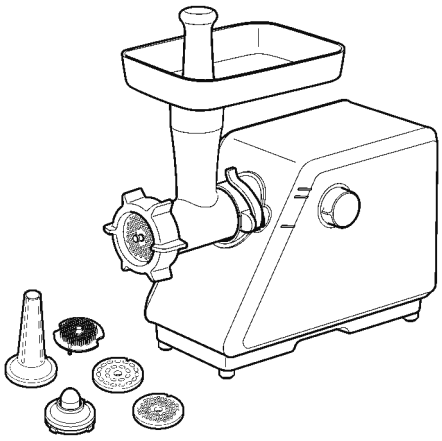

Model No. MK-ZJ3500KTN

Model No. MK-ZJ2700KTN

Model No. MK-ZJ3500KTZ

Model No. MK-ZJ2700KTZ

Chassis MK-ZJ3500

Product Color Black (K)

Destination MIddle East, Sudan, Nigeria, Egypt, Pakistan

⚠ WARNING

This service information is designed for experienced repair technicians only and is not designed for use by the general public. It does not contain warnings or cautions to advise non-technical individuals of potential dangers in attempting to service a product. Products powered by electricity should be serviced or repaired only by experienced professional technicians. Any attempt to service or repair the product or products dealt with in this service information by anyone else could result in serious injury or death.

IMPORTANT SAFETY NOTICE

There are special components used in this equipment which are important for safety. These parts are marked by ⚠ in the Schematic Diagrams, Circuit Board Diagrams, Exploded Views and Replacement Parts List. It is essential that these critical parts should be replaced with manufacturer's specified parts to prevent shock, fire or other hazards. Do not modify the original design without permission of manufacturer.

•The specifications and the parts of this product are subject to change without notice for performance improvement or other purposes.

TABLE OF CONTENTS

	PAGE
1 Safety Precautions	**2**
2 Specifications	**3**
3 Location of Controls and Components	**4**
4 Operating Instructions	**6**
5 Troubleshooting Guide	**13**
6 Disassembly and Assembly Instructions	**16**
7 Wiring Connection Diagram	**20**
8 Schematic Diagram	**24**
9 Exploded View and Replacement Parts List	**26**

Panasonic®

© Panasonic Corporation 2017 Unauthorized copying and distribution is a violation of law.

1 Safety Precautions

The precautions listed below must be followed in order to prevent accidents during repair and ensure the safety of the product after repair.

■ **The following labels describe the degree of danger and damage that might result through non-compliance with these precautions.**

⚠	**Danger**	This section warns of the urgent danger of death or serious injury.
⚠	**Warning**	This section warns of the risk of death or serious injury.
⚠	**Caution**	This section warns of the risk of injury or damage to property.

■ **The following labels describe the types of rules that need to be followed. (These labels are examples.)**

⚠	This label shows a "reminder" action to be paid attention to.
⊘	This label shows a "prohibited" action.
❗	This label shows a "compulsory" action to be followed without fail.

⚠ Warning

After repair, return wiring to its original condition.

❗ Rotary parts or part extremities that contact lead may cause failure, electrical shock, or fire.

Before repair.

CUT A.C. POWER LINE

Make sure to cut off the power line before disassembly, parts replacement, and assembly.
Otherwise, electrical shock or injury may occur.

Use a designated part

❗ Make sure to use a designated part when the part is marked in circuit diagrams and parts lists.
Otherwise, smoke, fire, or failure may occur.

Wait until the rotary part has stopped completely.

Do not touch

You may injure your hands even when the part is rotating slowly.

⚠ Caution

Wear gloves for disassembly, replacement and assembly.

Make sure to wear gloves in order to prevent injuries by metal edges and electric shock when the power is turned on.

2 Specifications

2.1. Specifications (MK-ZJ3500 / MK-ZJ2700)

	MK-ZJ3500	MK-ZJ2700
Power supply	220 - 240 V ～ 50 - 60 Hz	
Power consumption	430 - 530 W	400 - 500 W
Dimensions (W × D × H) (approx.)	19.5 x 43.7 x 44.0 cm	
Weight (approx.)	7.5 kg	
Attachments	Cutting plates, Kubbe attachments, Sausage attachment, Cleaning tool	

2.2. Important Information

Important Information

- **Do not grind hard foods such as bones.**
  (They may cause jamming.)
- **Do not grind ginger and other ingredients with hard fiber.**
  (They will not be ground.)
- **Do not operate more than 15 minutes at one time.**
  (It may cause a malfunction.)
- **When operating reverse function, do not operate more than 5 seconds.**
  (It may cause a malfunction.)
- **To avoid jamming, do not force to operate the appliance with excessive pressure. If the appliance jammed due to hard ingredients lodged onto the feed screw or the cutting blade, switch off immediately and clean the appliance. When the circuit breaker activates, switch off.**
  (See P.EN9 “When meat jammed inside of the head”.)
- **Do not fix the cutting blade and the cutting plate when using the kubbe attachments and sausage attachment.**
- **Make sure to clean the appliance after every use.**
  (Otherwise it may cause a malfunction.)

3 Location of Controls and Components

Parts Names and Handling Instructions

■ **Wash all detachable parts before using the appliance for the first time and dry well.(P.EN12-13)**
The cutting plates are coated with petroleum jelly to prevent from rusting.
If it is hard to remove it, please clean them with a nylon brush under running warm water.

■ **The illustrations inside mainly show model MK-ZJ3500.**

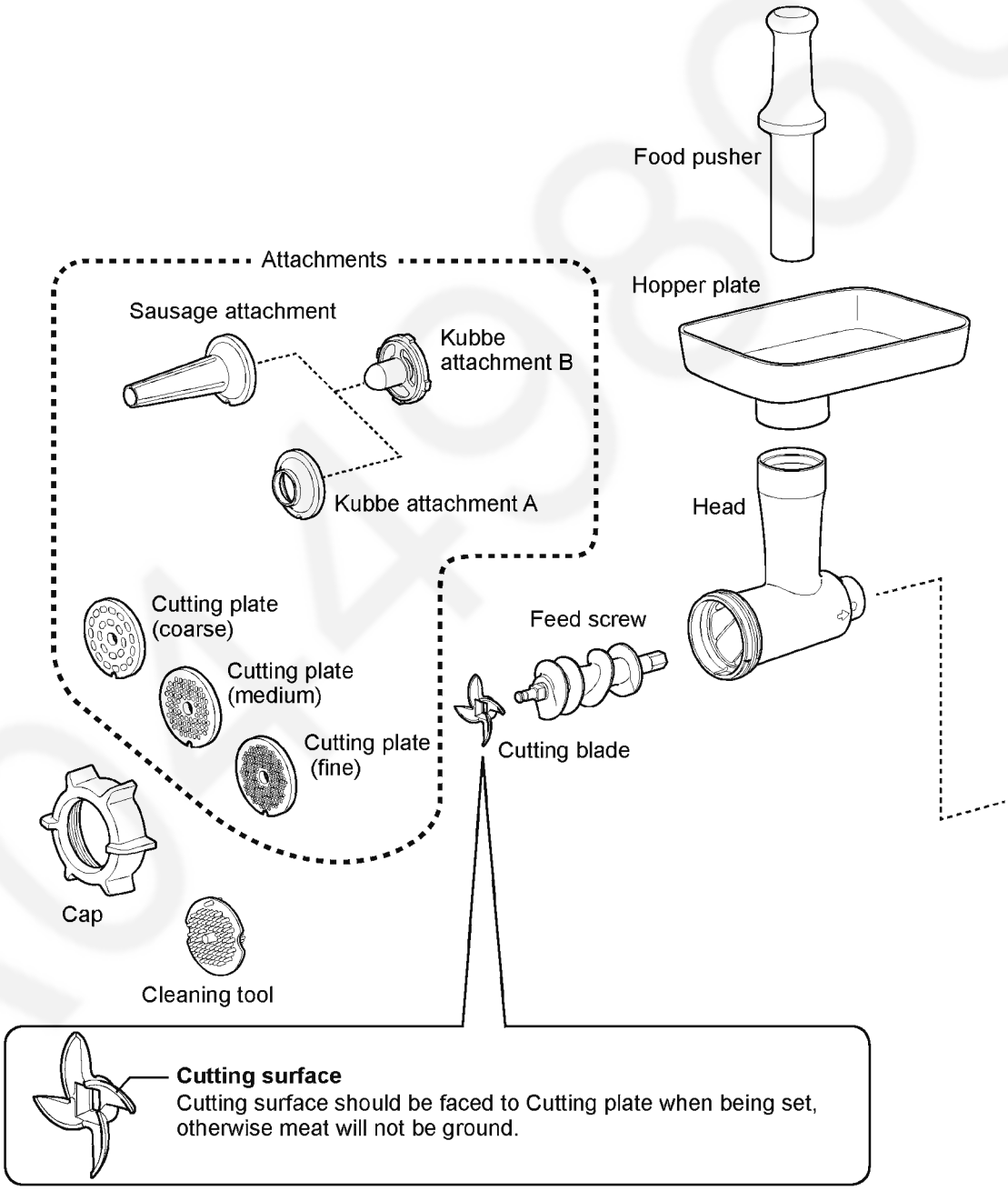

EN6

MK-ZJ3500

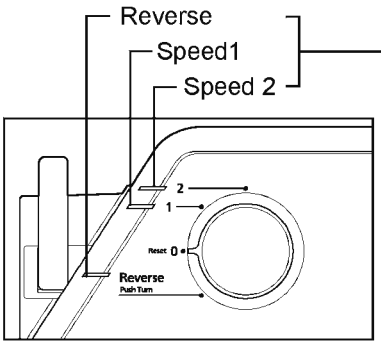

Switch indication	
2	High speed
1	Middle speed
0	Off / Circuit Breaker reset
Reverse	Reverse rotation

Any attachment can be used under any speed setting.
Middle speed is lower rotation than High speed.
It is suitable for lower sound noise situation.

MK-ZJ2700

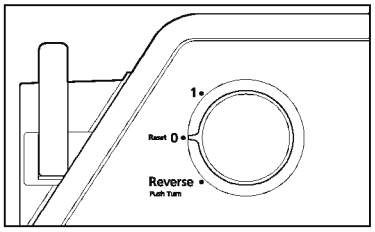

Switch indication	
1	On
0	Off / Circuit Breaker reset
Reverse	Reverse rotation

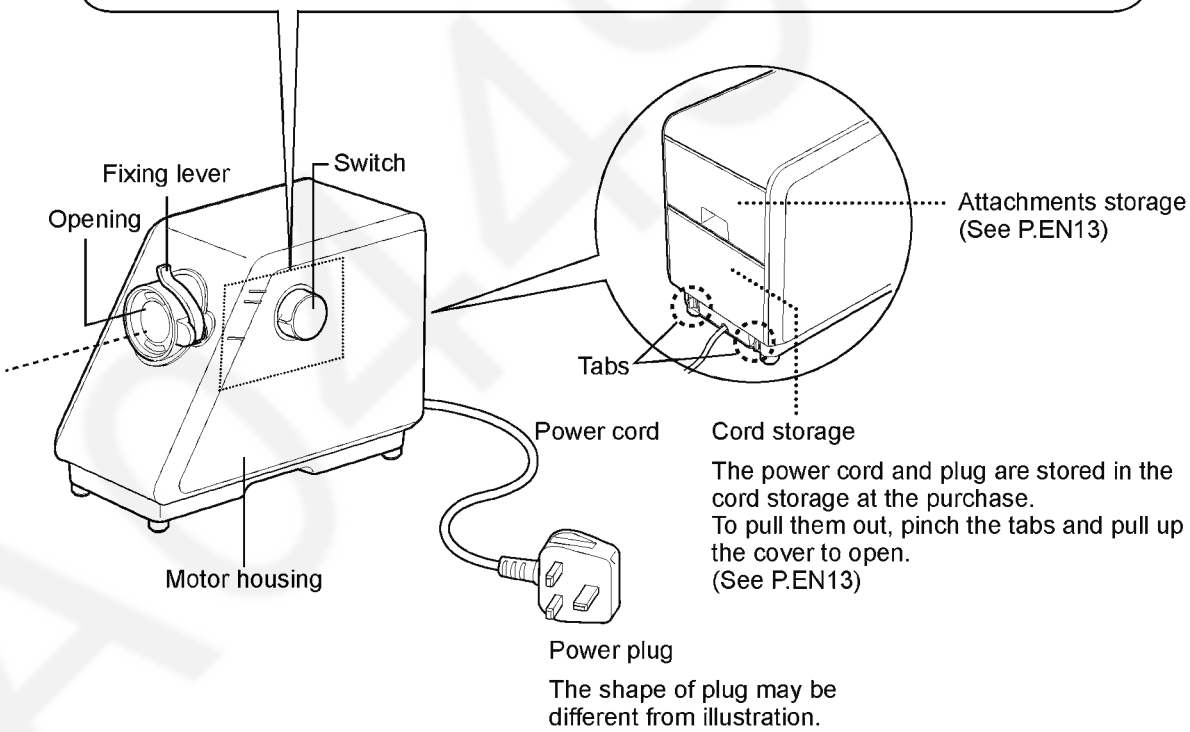

4 Operating Instructions

4.1. How to use

How to Use

To Grind Meat

Unplug when assembling the unit. Before plugging in, ensure the switch is off.

(Attaching)

1 Release the fixing lever and place the head onto the opening of the motor housing.
- Align the head vertically before push fully into the opening.
- If the head is not set properly, the head is needed to turn right and left slightly to get the correct alignment before push in.

Holding the head with one hand and tighten the head by closing up the fixing lever.

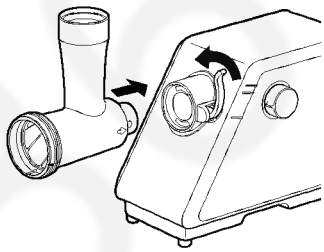

2 Place the feed screw into the head, long end first, by turning the feed screw slightly until it is set into the slot of the head.
- If the feed screw is not set properly, it does not turn.

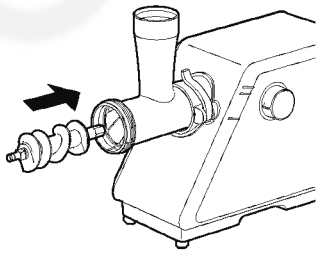

3 Place the cutting blade onto the feed screw shaft with the blade facing the front as illustrated.
- Cutting surface should be faced to the cutting plate when being set, otherwise meat will not be ground.

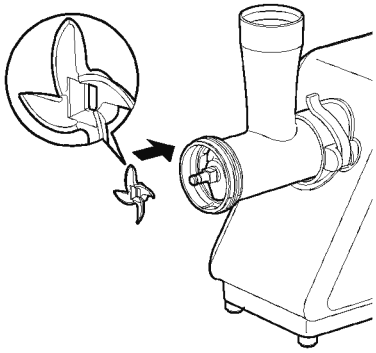

4 Place the desired cutting plate over the cutting blade by fitting its slot onto the feed screw shaft.
- If the cutting plate is not set properly, meat may be leak out around shaft in opening of motor housing. When meat leak out, clean around the shaft in opening of motor housing. Wipe with a well-wrung cloth.

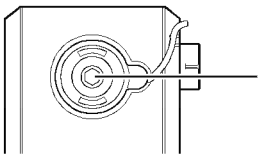

shaft in opening of the motor housing

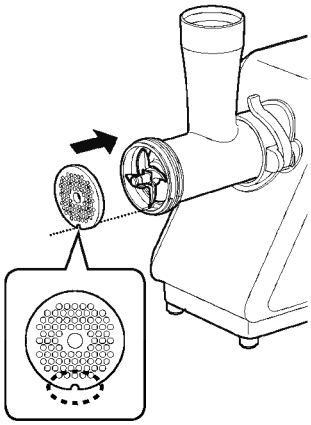

EN8

5 Screw the cap into the head firmly.

Place the hopper plate on the head and fix it into position.

Set the unit on a firm surface.
- The air vents at the bottom and the side of the motor housing should be kept free and not blocked.

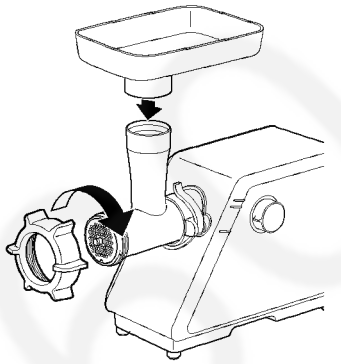

(Grinding Meat)

6 Cut all foods into pieces so that they fit easily into the hopper opening.
Plug in, then switch on.

When the switch is turned on, LED will light up.
(Only MK-ZJ3500)

Place foods on the hopper plate and feed foods into the hopper opening.
- Use the food pusher.
  Please hold the hopper plate with one hand when using the food pusher.
- When grinding nuts, feed handful portion into hopper opening slowly one at a time. (Do not feed them continuously. Otherwise the circuit breaker protection may activate.)
  Use speed 2 (High speed) for grinding nuts. (Only MK-ZJ3500)

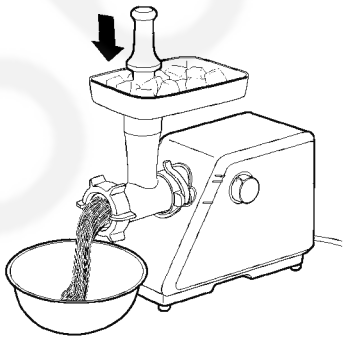

After use, switch off and unplug.

Note:
- The head may wobble slightly during use, but it is normal. Do not over tighten the fixing lever to stop this movement. It may cause damage.

When meat jammed inside of the head

When meat does not come out from the cutting plate due to the jam of bones or other hard ingredient, follow the below steps to release it.

1 Switch off and wait until the motor has stopped completely.

2 Hold on to the motor housing then push in and turn the switch to “Reverse” for a few seconds. (Do not turn it more than 5 seconds.)
When the switch is turned on, LED will light up. (Only MK-ZJ3500)
Then turn the switch back to “Off”.

3 Unplug and detach the parts by reversing steps on “To Grind Meat” from 3-5 to remove ingredients in the head.

4 Attach the parts again and continue grinding meat.

How to Use

To Use the Sausage Attachment

Meat should be ground and seasoned before making sausage links. (See P.EN8 “To Grind Meat”.)
Attach the coarse cutting plate to the grinder. For finer textured sausages, use the fine cutting plate.
Detach by reversing steps on “To Grind Meat” from 3-5 to remove the cutting plate and the cutting blade.

1 Place the kubbe attachment B and the sausage attachment onto the feed screw shaft together.

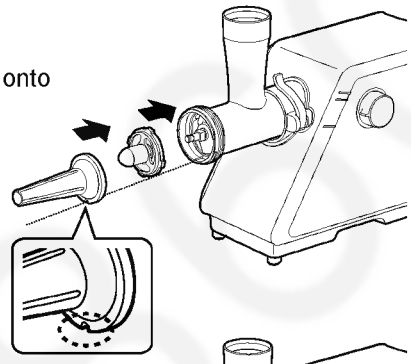

2 Screw the cap into the head firmly.

Place the hopper plate on the head and fix it into position.

Set the unit on a firm surface.
- The air vents at the bottom and the side of the motor housing should be kept free and not blocked.

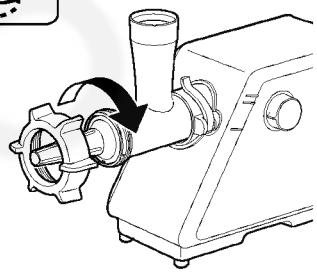

3 Cut casing into 60 or 90 cm lengths.
Put and gather all of casing over the sausage attachment except the last 10-15 cm as shown in the illustration.

Plug in, then switch on.
When the switch is turned on, LED will light up. (Only MK-ZJ3500)

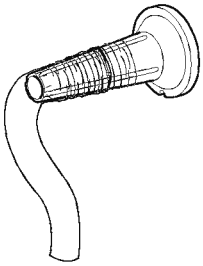

4 Place seasoned meat into the hopper plate and press it through grinder with food pusher. Stuff casing naturally with little resistance as the sausage comes out of the spout.
To make a link, pinch at desired length and press the sausage meat back a little.
Then twist 3-4 times. Pinch the next sausage and twist the sausage in the opposite direction 3-4 times to secure the link.
When the casing is filled, tie securely at the end with a string.

- Never push the food mixture into the grinder with your fingers. Always use the food pusher.
- When the meat is forced into the casing too tightly, the sausage is likely to break immediately. If necessary, prick tiny holes at the end of the casings to let air escape.

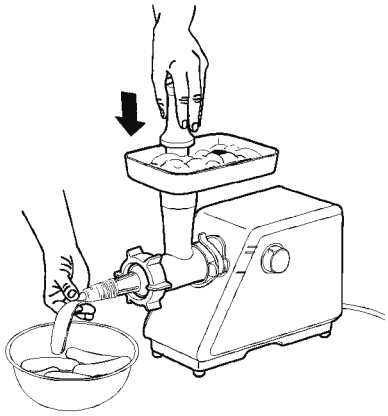

After use, switch off and unplug.

To Make Kubbe

English

-Recipe-

(Stuffing)

100 g	mutton
1 1/2 tablespoons	olive oil
1 1/2 tablespoons	onion (cut finely)
1/3 teaspoon	all spice
1/2 teaspoon	salt
1 1/2 tablespoons	flour

Grind mutton once or twice.

Fry onion until brown and add minced mutton, all spice, salt and flour.
Grind the mixture three times.

(Outer shell)

450 g	lean meat
150-200 g	flour
1 teaspoon	all spice
1	nutmeg
a pinch	powdered red pepper
dash	pepper

Grind meat three times and mix all ingredients together in a bowl.

- More meat and less flour for outer shell creates better consistency and taste.

Detach by reversing steps on “To Grind Meat” from 3 - 5 to remove the cutting plate and the cutting blade.

1 Place the kubbe attachments A and B onto the feed screw shaft together.

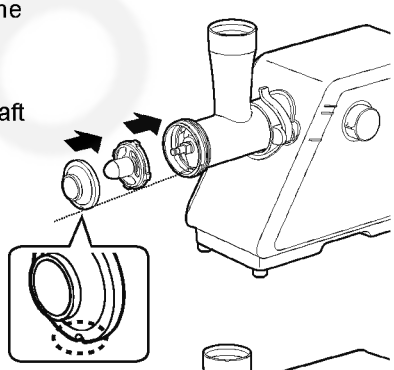

2 Screw the cap into the head firmly.
- The air vents at the bottom and the side of the motor housing should be kept free and not blocked.

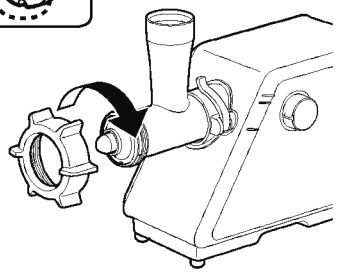

3 Following the step 6 on “To Grind Meat” then make short cylindrical outer shells.

Form kubbe as illustrated below and deep fry.

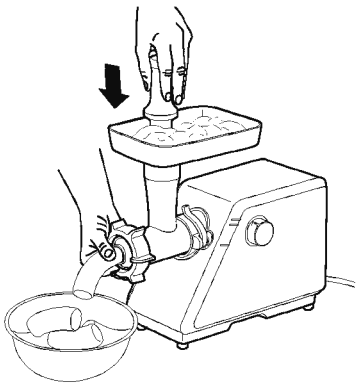

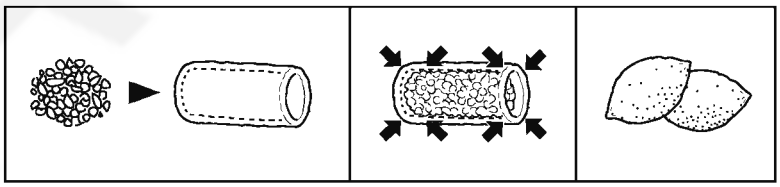

EN11

4.2. After use

After Use

Before detaching parts, make sure that the motor has stopped completely, then disconnect the plug from the outlet.

Note

- Do not use benzine, thinner, alcohol, bleach, polishing powder or metal brush otherwise the surface will be damaged.
- Do not use a dishwasher.

Detaching

Detach by reversing steps from 1-5 of P.EN8-9 (Attaching).

When it is hard to remove the cap, place a screwdriver between the protrusions and unscrew.

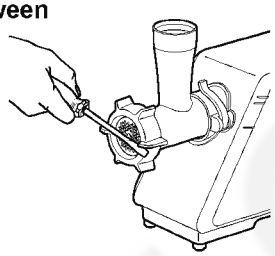

When it is hard to remove the cutting plate, place a screwdriver between the cutting plate and the head as illustrated and lift up.

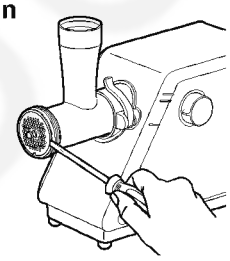

Cleaning

■ **Remove meat and other foods before cleaning.**

Cap

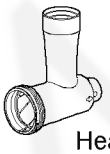

Head

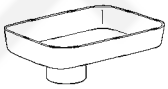

Hopper plate

Wash with diluted dish soap (neutral) and a soft sponge, and dry well.

- Leaving the parts wet after cleaning may cause corrosion.

Feed screw

Cutting blade

Cutting plates

Wash with diluted dish soap (neutral) and a soft sponge, and dry well.

- Leaving the parts wet after cleaning may cause corrosion.

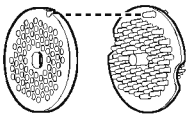

<Easy cleaning for the fine and medium cutting blades>
It is easy to remove the remaining ingredients from holes of the cutting plates by pressing them out with the cleaning tool.

<To keep better condition>
Rubbing a little vegetable oil after washing and drying will help prevent them from rusting and keep them lubricated.

EN12

Food pusher

Sausage attachment

Kubbe attachment A

Kubbe attachment B

Cleaning tool

Wash with diluted dish soap (neutral) and a soft sponge, and dry well.

- Use a brush to clean the cleaning tool.

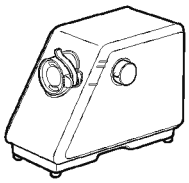
Motor housing

Wipe with a well-wrung cloth.

Storing

< Cord storage >

① Pinch the tabs as illsutration on the right and pull up the cover to open.
② Store the power cord and power plug and close the cover.
- When you store in or out the power cord and power plug from storage, lower your sight and do not let the power plug prong touch the power cord.
- You hear a sound when it is closed firmly.

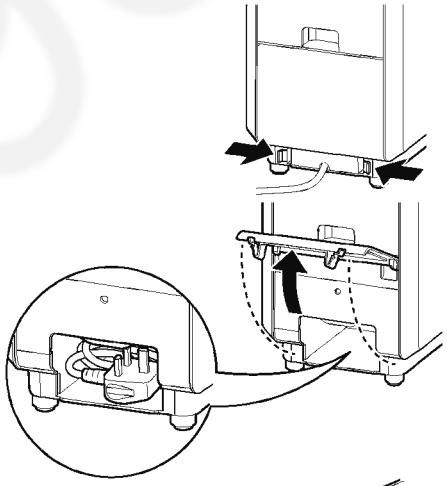

< Attachments storage >

(for cutting plates/kubbe attachment A and B/ sausage attachment/cleaning tool)

① Pull the storage out and lift it up to remove the storage.
② Place the attachments as illustration on the right.
- Reversing steps to attach the storage.
  Push the strage in until you hear the sound.

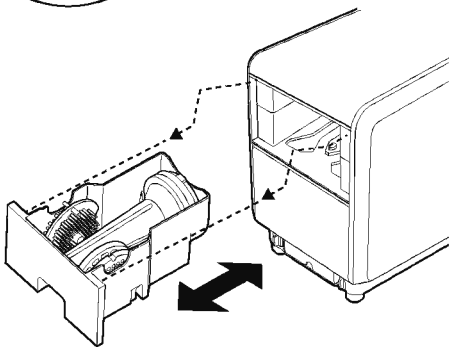

4.3. Troubleshooying / Circuit Breaker Protection

Troubleshooting

Please check following points before arranging for service.

Problem	Cause and Action
The appliance does not run after the switch is turned on.	●Is the power plug inserted into an outlet? ► Insert the power plug into an outlet.
The appliance stopped suddenly.	●The circuit breaker protection is activated. • You have used prohibited ingredients. • The volume of ingredients is too large. • The ingredients are too hard. ► See “Circuit Breaker Protection” (See below).
The switch does not turn.	●This is a malfunction. ► Please contact the service center for repair.
The LED light is not on even the appliance is in use. (Only MK-ZJ3500)	
The LED light is on but the appliance does not start. (Only MK-ZJ3500)	
The feed screw is not turning even the motor is on.	

Circuit Breaker Protection

When the circuit breaker automatically stops motor due to overloading, follow the below steps.

1. Switch off to reset the circuit breaker.
2. Unplug and detach the parts by reversing steps on “To Grind Meat” from 3-5 to remove ingredients in the head.
3. Attach the parts again and continue grinding meat.

EN14

5 Troubleshooting Guide

5.1. SYMPTOM : Switch turned on, but motor failure to start.

Check part	Check point	Remedy
Power plug	It's checked whether a power plug is put in an outlet.	A power plug is put in an outlet.
Power cord	Breaking of power cord is checked.	Replace power cord
Breaker	Breaking of breaker is checked.	Replace breaker
Rotary switch	Breaking of rotary switch is checked.	Replace rotary switch
Reshuffling switch	Breaking of reshuffling switch is checked.	Replace reshuffling switch
Motor comp	Breaking of motor comp is checked.	Replace motor comp
P.C.B.(power)	A substrate is checked. Cracks of a substrate are checked.	Replace P.C.B.(power)

5.2. SYMPTOM : LED doesn't light up.

Check part	Check point	Remedy
Power plug	It's checked whether a power plug is put in an outlet.	A power plug is put in an outlet.
Power cord	Breaking of power cord is checked.	Replace power cord
Breaker	Breaking of breaker is checked.	Replace breaker
Rotary switch	Breaking of rotary switch is checked.	Replace rotary switch
Reshuffling switch	Breaking of reshuffling switch is checked.	Replace reshuffling switch
Cable unit	Breaking of cable unit is checked.	Replace cable unit
P.C.B.(LED)	A substrate is checked. Cracks of a substrate are checked.	Replace P.C.B.(LED)

5.3. SYMPTOM : A breaker moves during driving, and it doesn't revolve (overloaded).

Check part	Check point	Remedy
-	Too hard meat being fed.	Take out the hard meat.
-	Too much meat being fed at once.	Reduce the meat feed rate.
-	Used for too long continuously.	Follow the specified operating time.
Motor comp	Branding of a motor Rock of a motor	Replace motor comp

5.4. SYMPTOM : Motor running, but feed screw failure to turn.

Check part	Check point	Remedy
Motor comp	Gears worn out.	Replace motor comp
Motor comp	Gears damaged.	Replace motor comp
Feed screw	Feed screw worn out.	Replace the feed screw.
Feed screw	Feed screw damaged.	Replace the feed screw.

5.5. SYMPTOM : Motor running too noisy and meat grinding too slow.

Check part	Check point	Remedy
Motor comp	Carbon brush worn out.	Replace motor comp
Motor comp	Gears worn out or damaged.	Replace motor comp
Cutting blade or Cutting plate	Cutting blade or cutting plate worn out.	Replace the cutting blade or cutting plate.

5.6. SYMPTOM : Motor running noise unusual.

Check part	Check point	Remedy
Motor comp	Foreign mater caught in gears.	Replace motor comp
Motor comp	Gears worn out or damaged.	Replace motor comp

5.7. SYMPTOM : Smell of burning from motor.

Check part	Check point	Remedy
Motor comp	Branding of a motor Rare short circuit of a motor	Replace motor comp

5.8. Check point

[MK-ZJ3500]

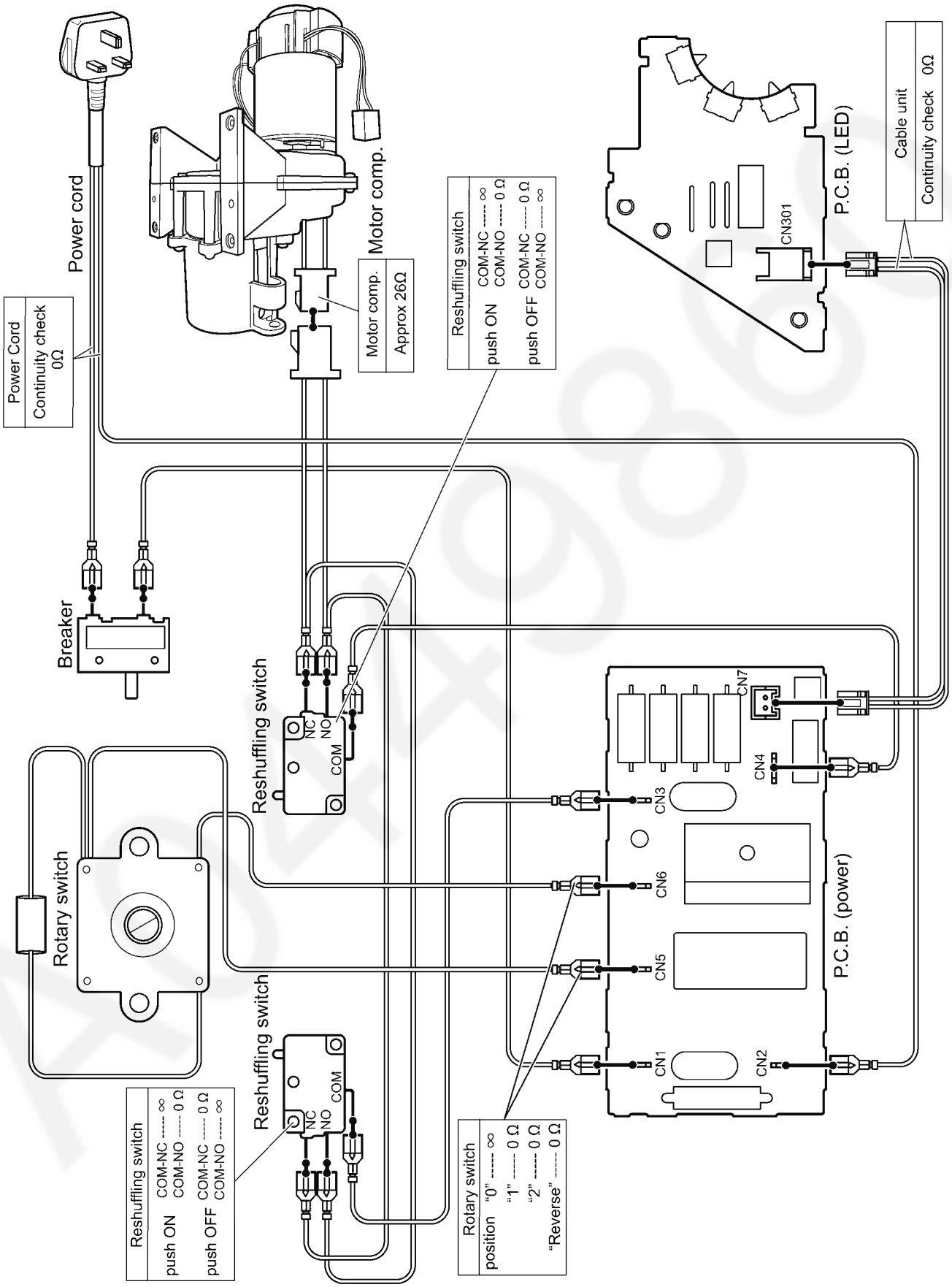

[MK-ZJ2700]

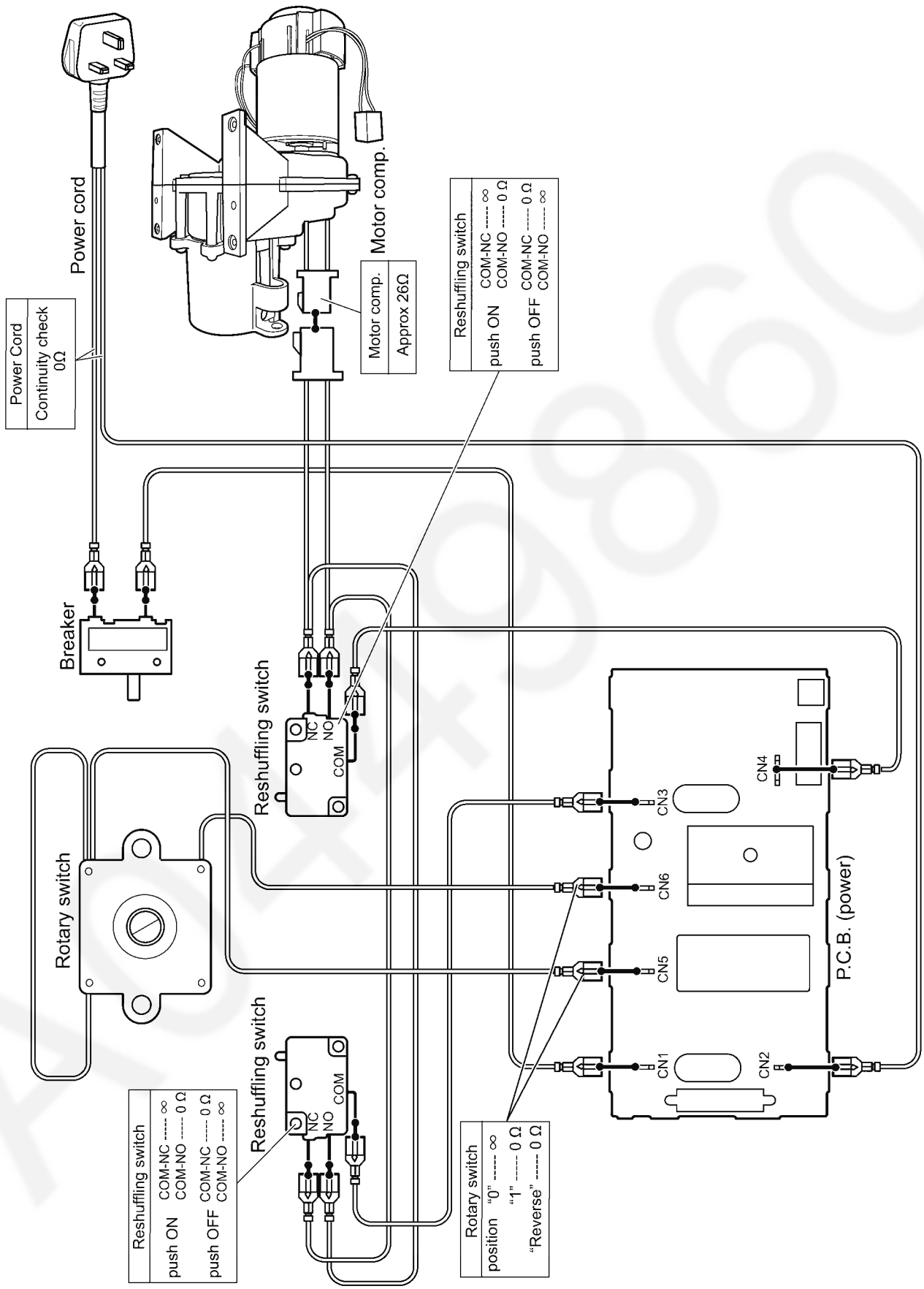
Power cord
Power Cord
Continuity check
0Ω
Motor comp.
Motor comp.
Approx 26Ω
Reshuffling switch
push ON COM-NC ----- ∞
COM-NO ----- 0 Ω
push OFF COM-NC ----- 0 Ω
COM-NO ----- ∞
Breaker
Reshuffling switch
NC
NO
COM
Rotary switch
Reshuffling switch
NC
NO
COM
Reshuffling switch
push ON COM-NC ----- ∞
COM-NO ----- 0 Ω
push OFF COM-NC ----- 0 Ω
COM-NO ----- ∞
Rotary switch
position "0" ----- ∞
"1" ----- 0 Ω
"Reverse" ----- 0 Ω
CN1
CN2
CN3
CN4
CN5
CN6
P.C.B. (power)

6 Disassembly and Assembly Instructions

⚠ Caution	
⚠	**Be careful not to injure youself on the metal edge during disassembly, replacement, or assembly.** Make sure to wear gloves.

⚠ Warning	
!	Pull the faston terminals straight out without twisting.

For assembly, refer to the Assembly Instructions, and perform the procedures in the opposite order of disassembly.

6.1. Attachment

1. Remove the Fixing lever for removal of the Grinder head section.

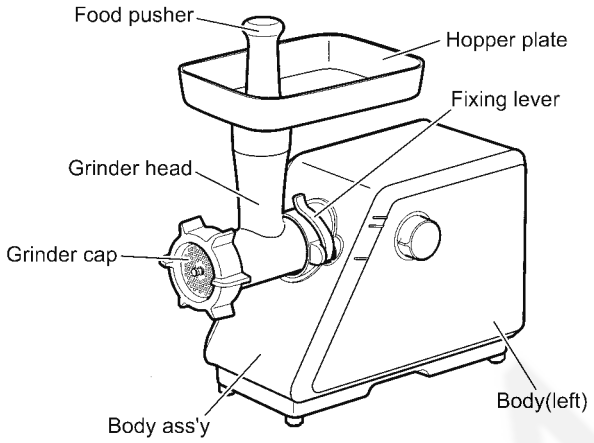

6.2. Storage part for attachment

1. Storage part for attachment in the body rear is drawn out and removed from the Body ass'y.

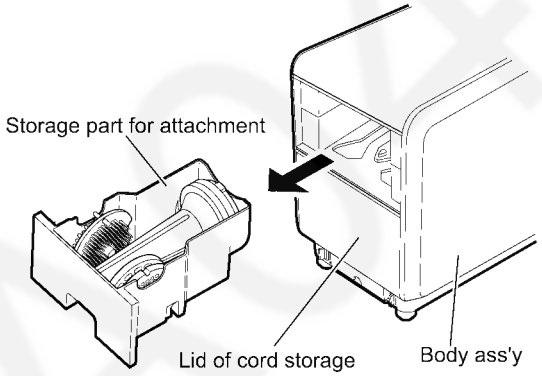

6.3. Lid of cord storage

1. Lift the Lid of cord storage, decide to push a hinge part of a lid inside and remove a lid from the Body ass'y.
2. Power cord is drawn out.

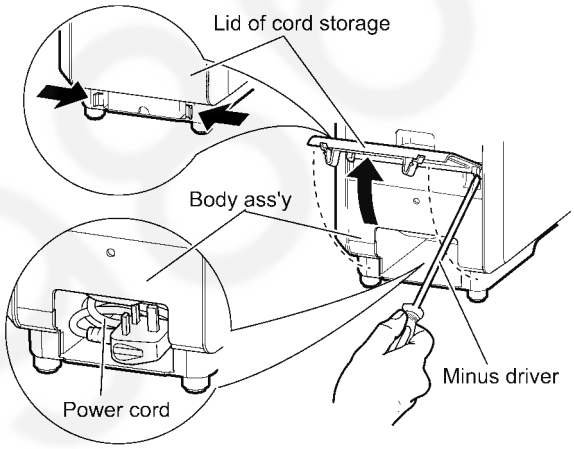

6.4. Switch knob

1. The body stave, and remove the Switch Knob using a minus driver.

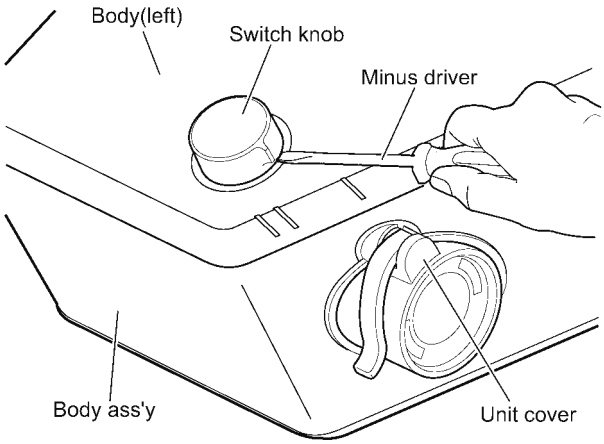

6.5. Bottom plate

1. Remove the torx screws (T20 / 8 pcs.) from the Bottom plate for removal there of

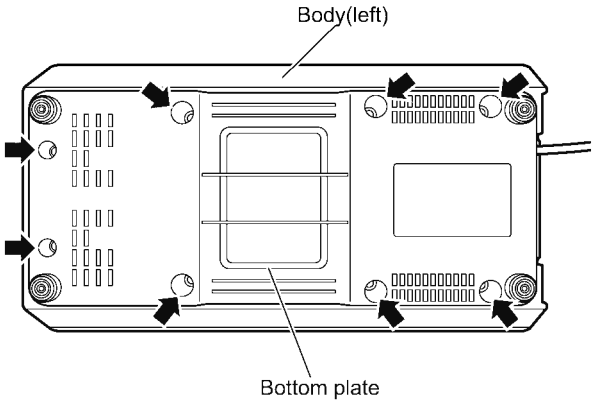

6.6. Cord box

1. Power cord is removed from a stopper part and the Cord box is removed from the Body ass'y.

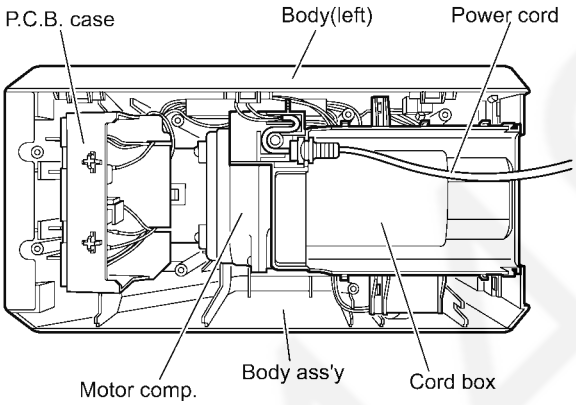

6.7. Body(left)

1. A minus driver is put in a gap of the Body ass'y and the Body(left) and Body(left) is removed from the Body ass'y while open the clows of Body(left).

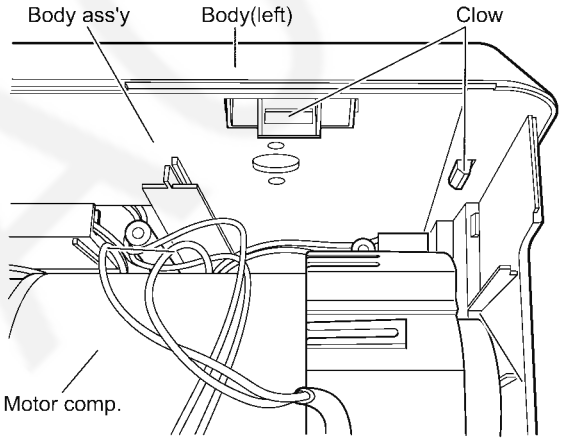

6.8. P.C.B. (power)

1. Disconnect the connector from the P.C.B. (power).
2. Disconnect the fasuton terminals from the P.C.B. (power).
3. The P.C.B. case is taken out from the Body ass'y and a lead line is removed from a cord clamp.
4. A fixed screw (1) is removed and the P.C.B. (power) is removed from the P.C.B. case.

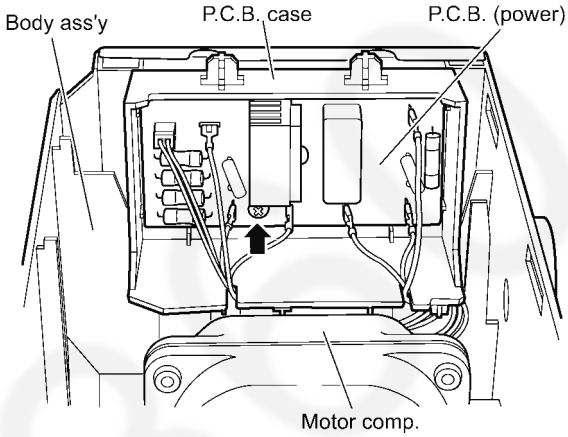

6.9. Switch unit

1. The fixed screws (3 pcs.) are removed, switch unit, temporary removal trout.

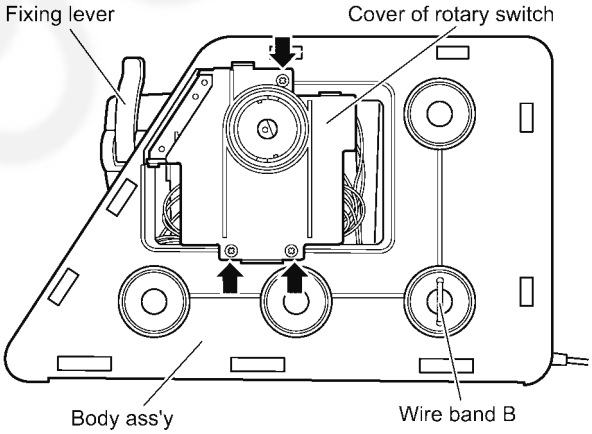

6.9.1. Resolution of switch unit

Cover of rotary switch

• Cover of rotary switch is removed while forcing clows.

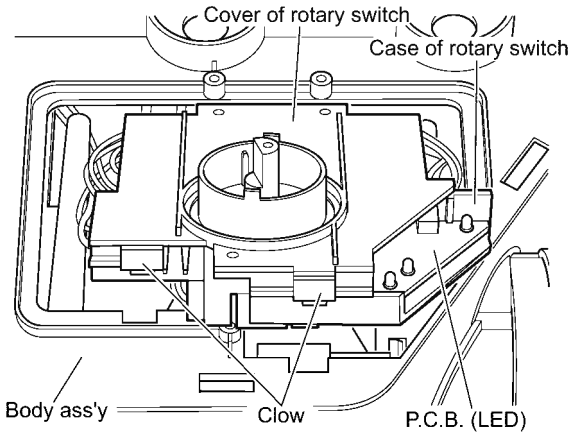

Switch cam
- Remove the Switch cam Spring for switch cam and Spring for breaker.

P.C.B. (LED)
- A clow is opened and the P.C.B. (LED) is removed.
- Disconnect the connector from the P.C.B. (LED).

Breaker
- A clow is opened and the Breaker is removed.
- Disconnect the fasuton terminals from the Breaker.

Reshuffling switch (Microswitch)
- The Reshuffling switch is taken out from the Case of rotary switch.
- Disconnect the fasuton terminals from the Reshuffling switch.

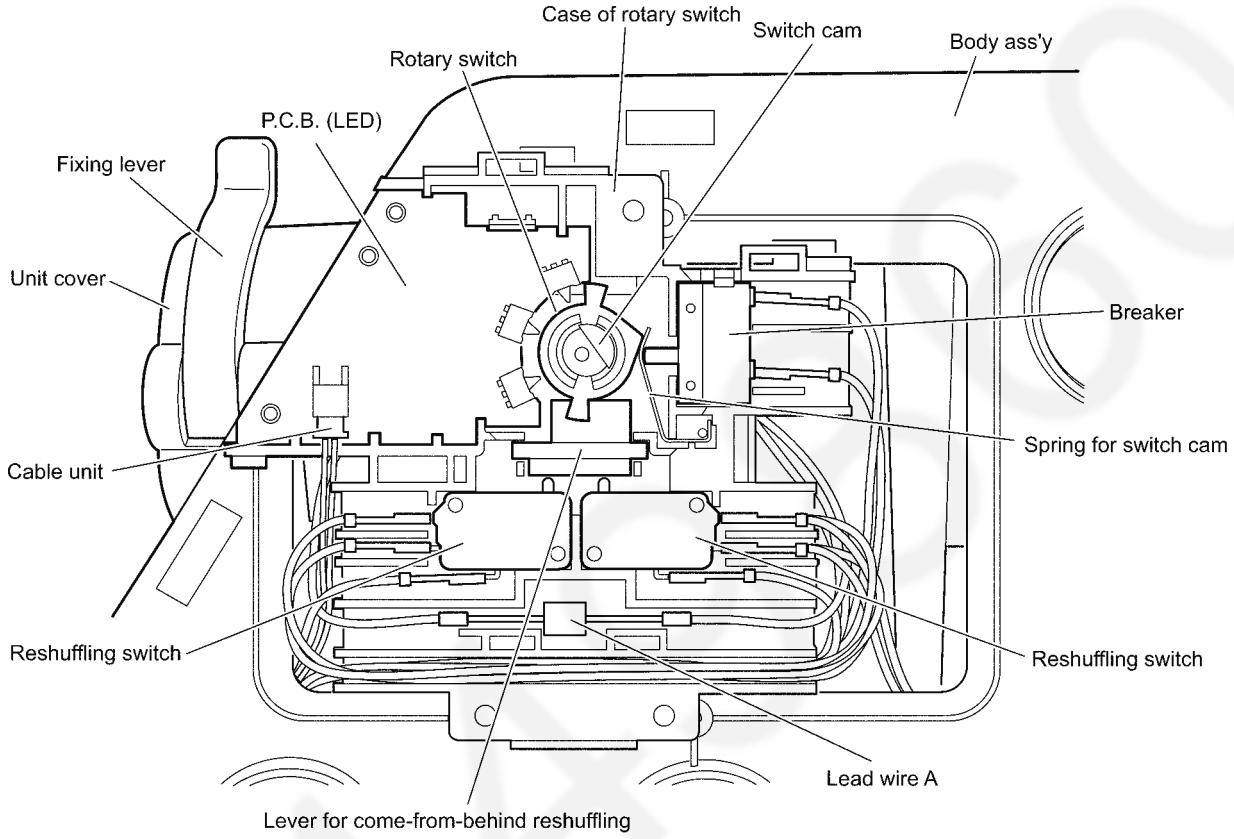

6.10. Motor comp.

1. Open the clows of the Unit cover from the boss of the Motor comp..

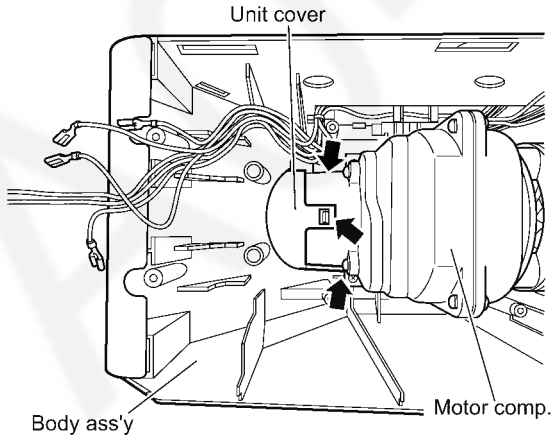

2. Remove a Unit cover from the Motor comp..
3. The Handle shaft is removed and the Fixing lever is removed.

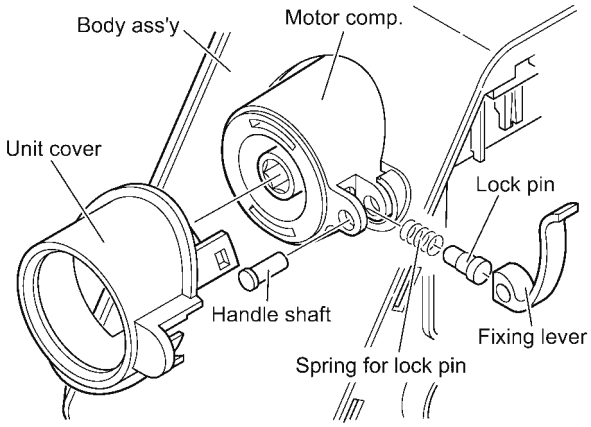

4. The fixed screws (3 pcs.) are removed, switch unit, temporary removal trout.
5. The Wire band B on which a condenser is being fixed is cut.

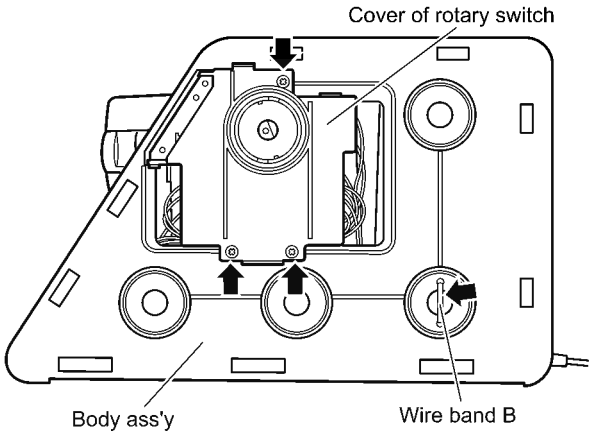

6. The Protection tube is shifted and a connector of the Motor comp. is removed.
7. Remove a fixed screw (4 pcs.)

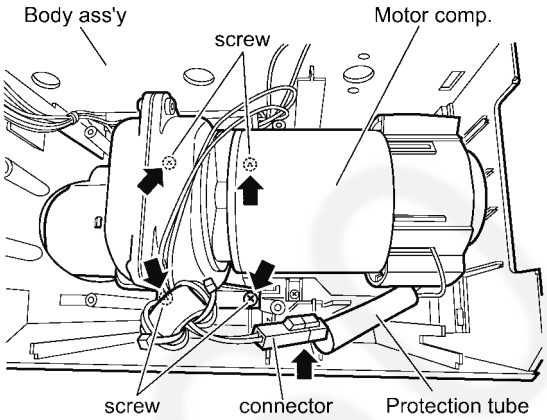

8. Remove the Motor comp. from the Body ass'y.

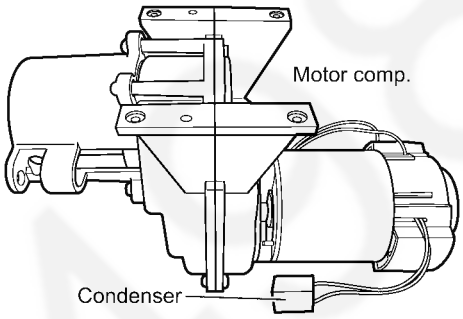

• Motor comp.

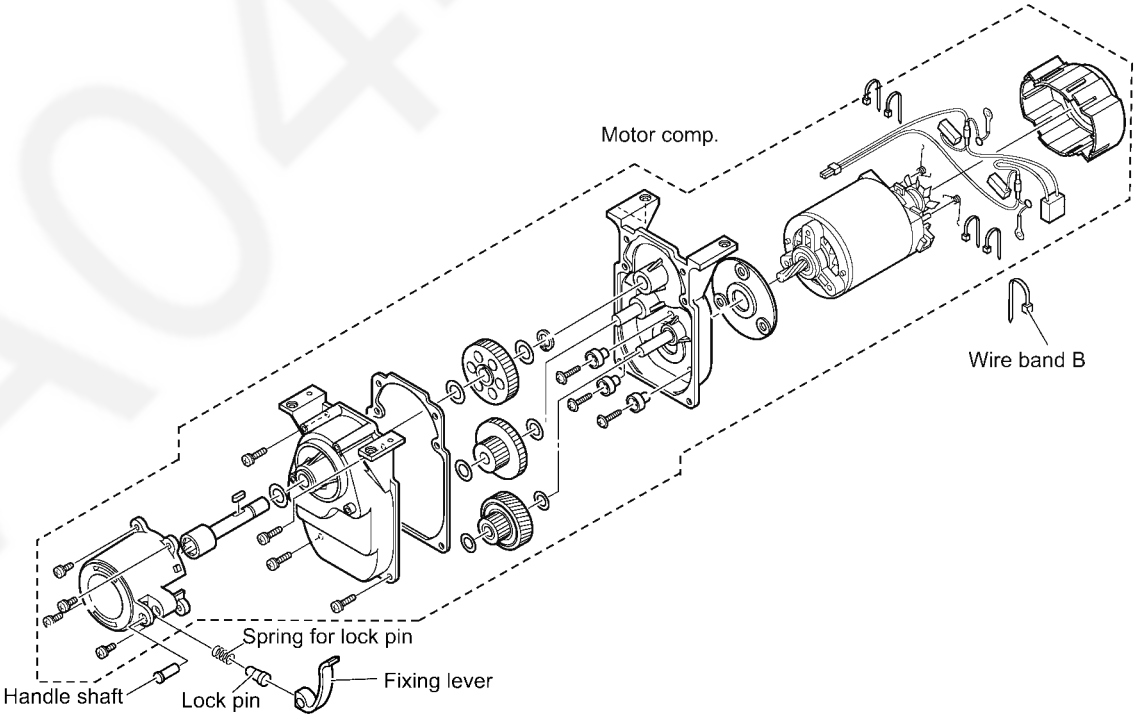

7 Wiring Connection Diagram

7.1. Actual wiring diagram

[MK-ZJ3500]

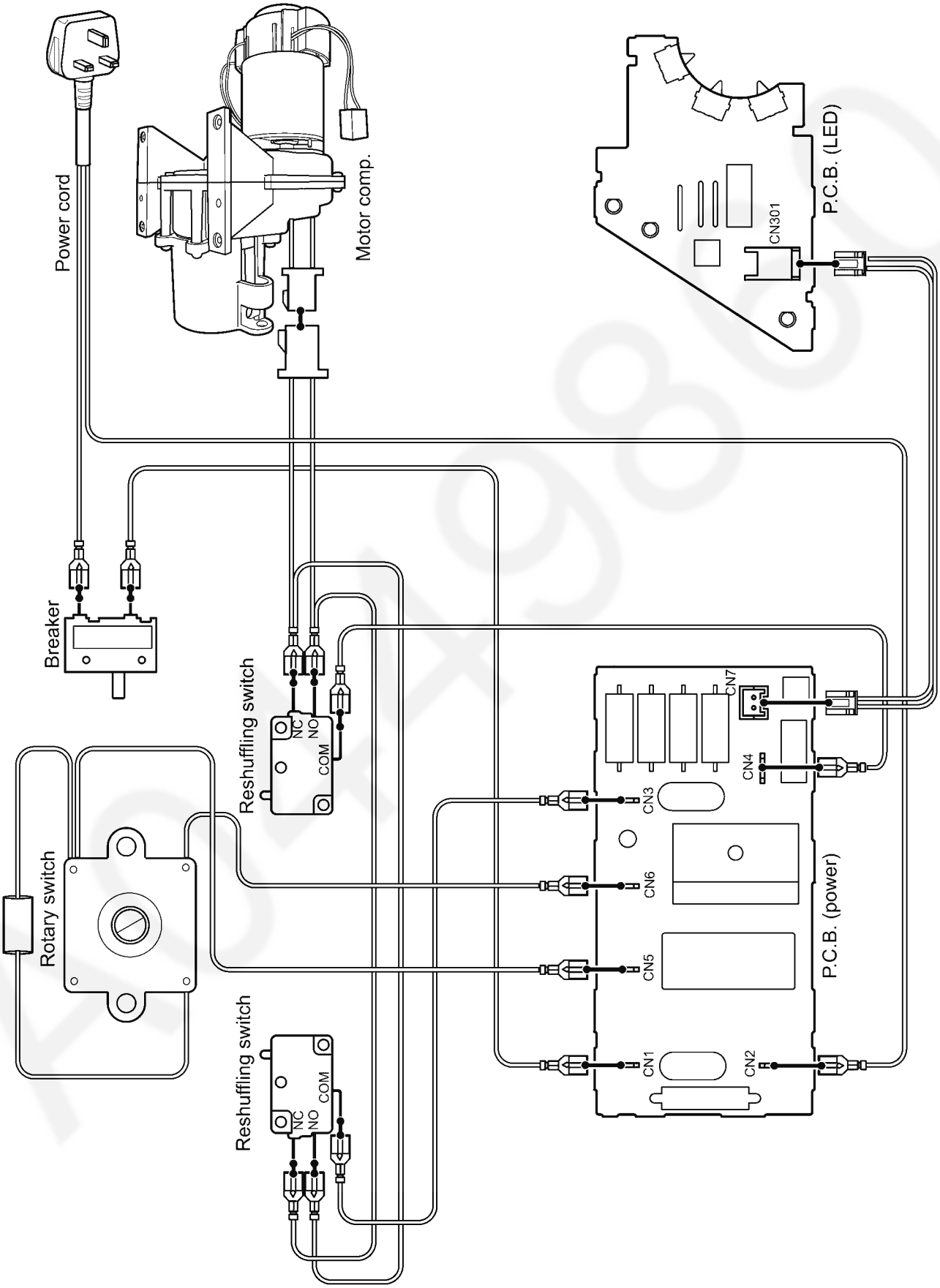

[MK-ZJ2700]

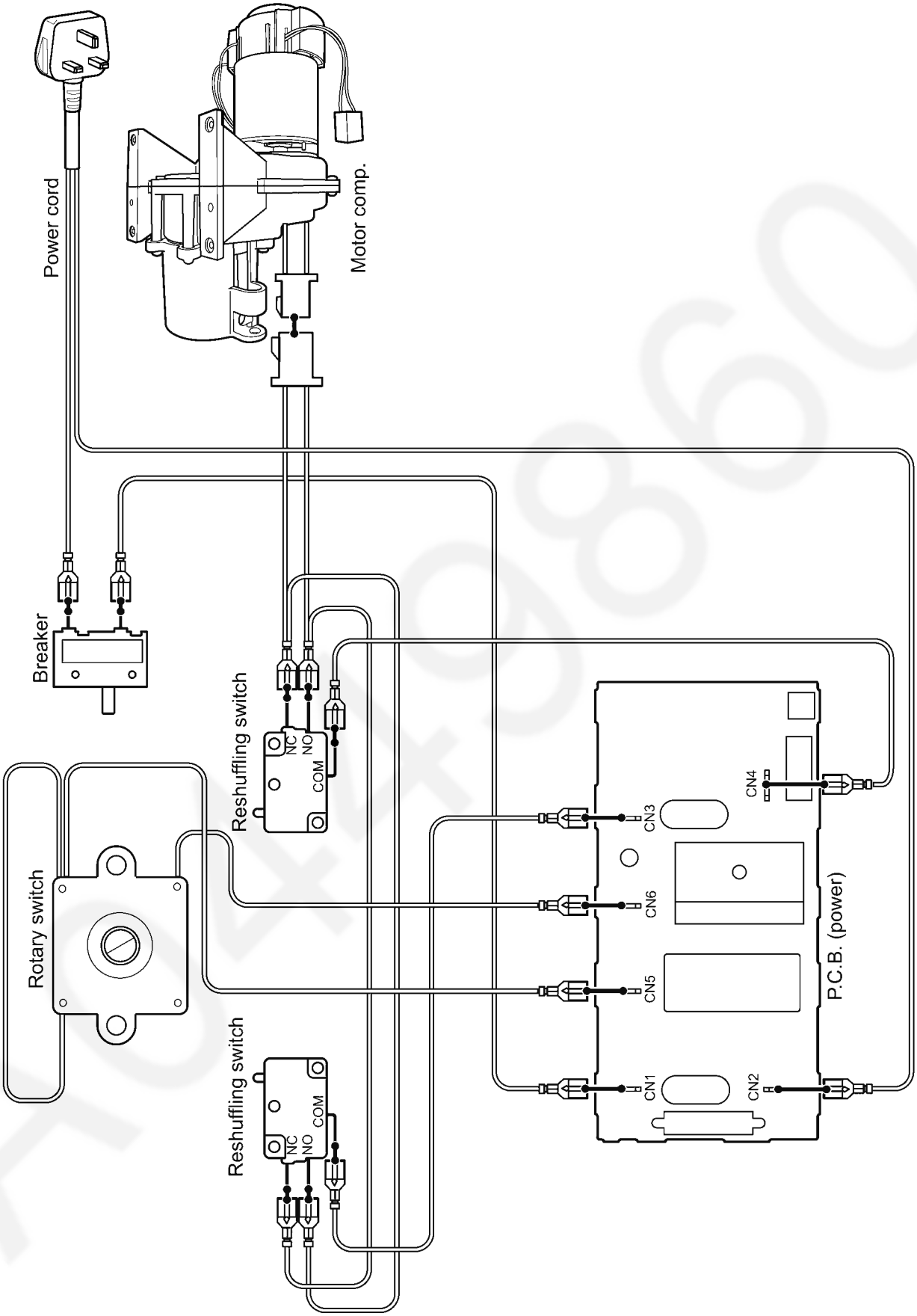
Power cord
Motor comp.
Breaker
Reshuffling switch
NC
NO
COM
Rotary switch
Reshuffling switch
NC
NO
COM
CN4
CN3
CN6
CN5
CN1
CN2
P.C.B. (power)

7.2. Wiring processing figure

[MK-ZJ3500]

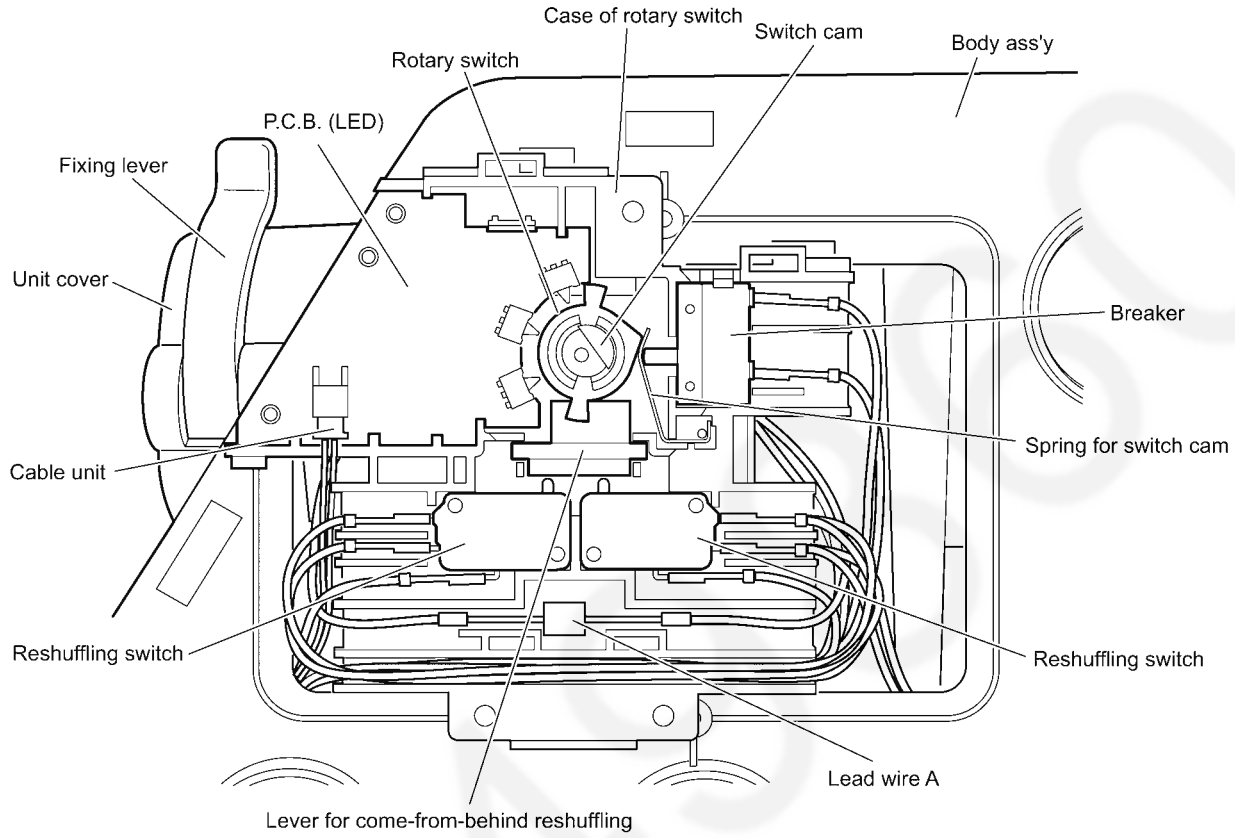

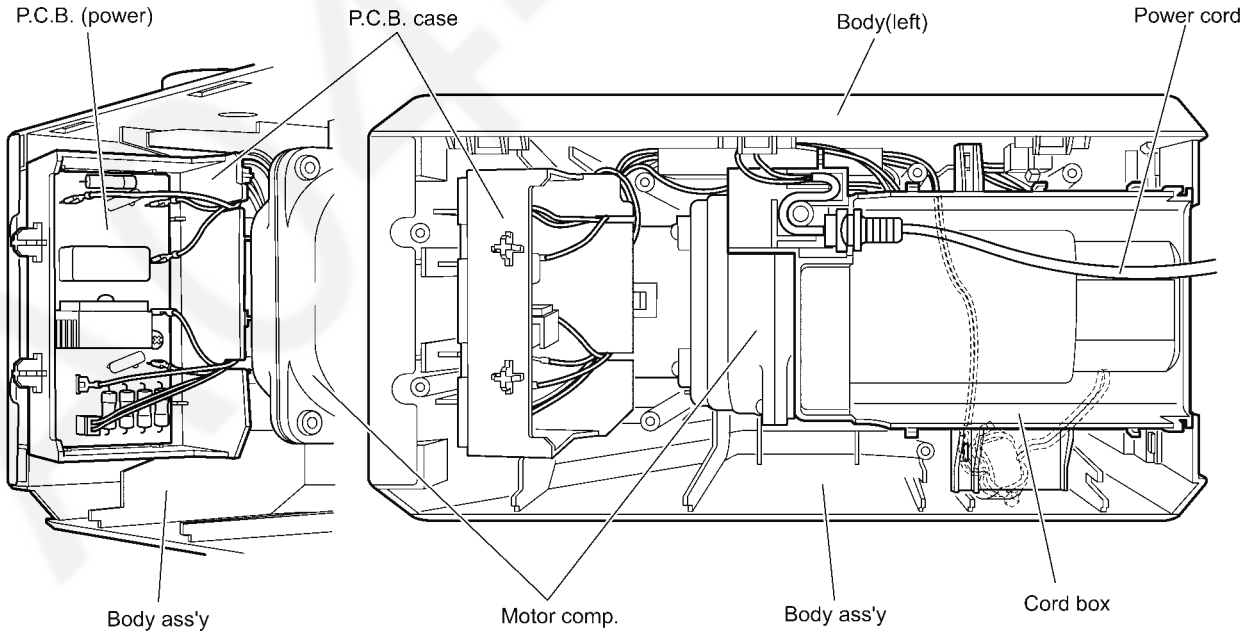

[MK-ZJ2700]

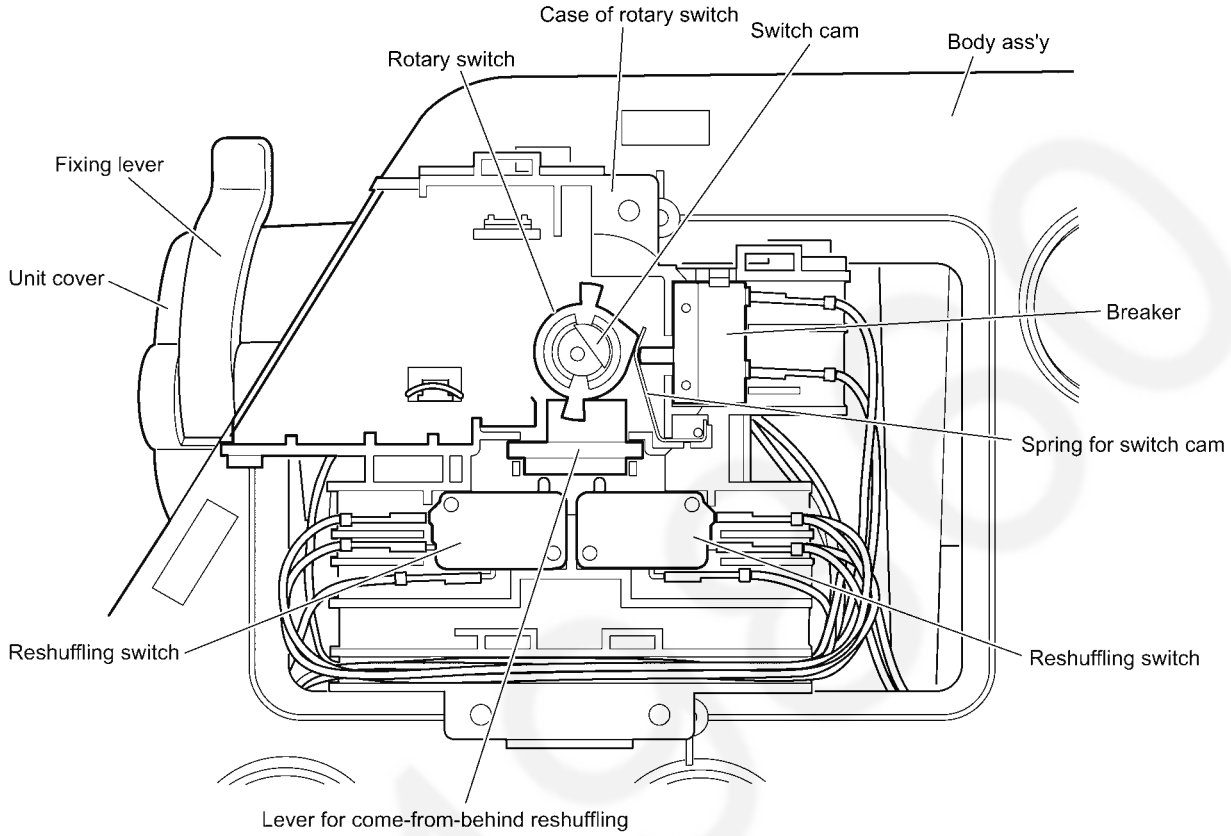
Case of rotary switch
Switch cam
Body ass'y
Rotary switch
Fixing lever
Unit cover
Breaker
Spring for switch cam
Reshuffling switch
Reshuffling switch
Lever for come-from-behind reshuffling

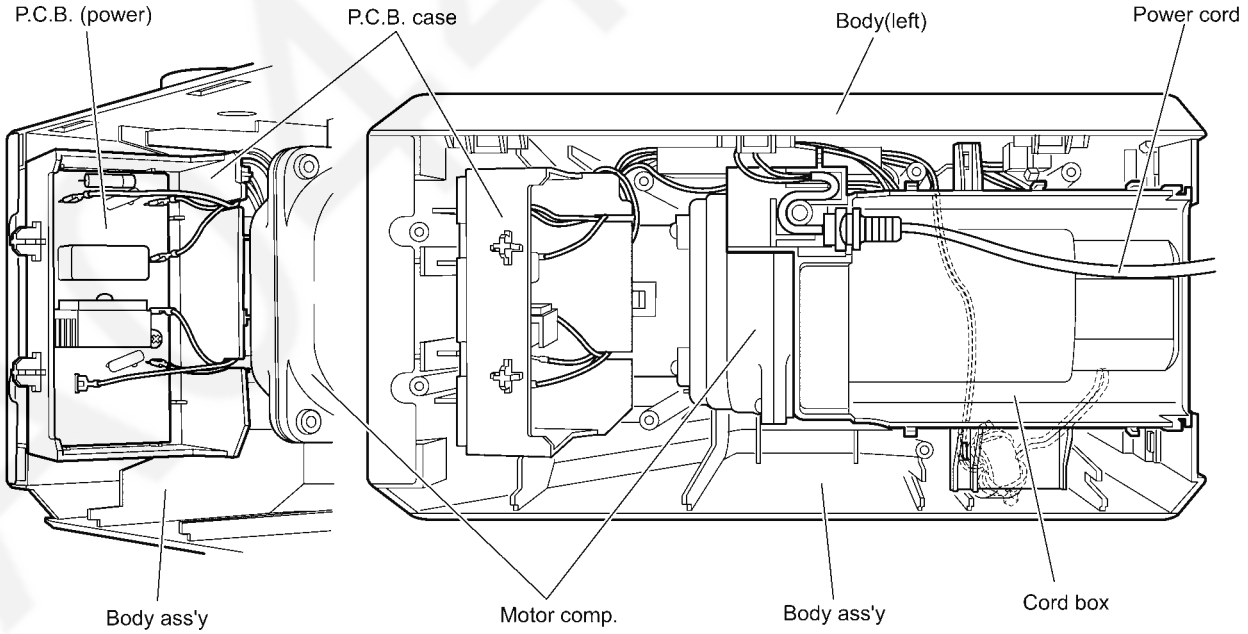
P.C.B. (power)
P.C.B. case
Body(left)
Power cord
Body ass'y
Motor comp.
Body ass'y
Cord box

8 Schematic Diagram

8.1. Circuit diagram

[MK-ZJ3500]

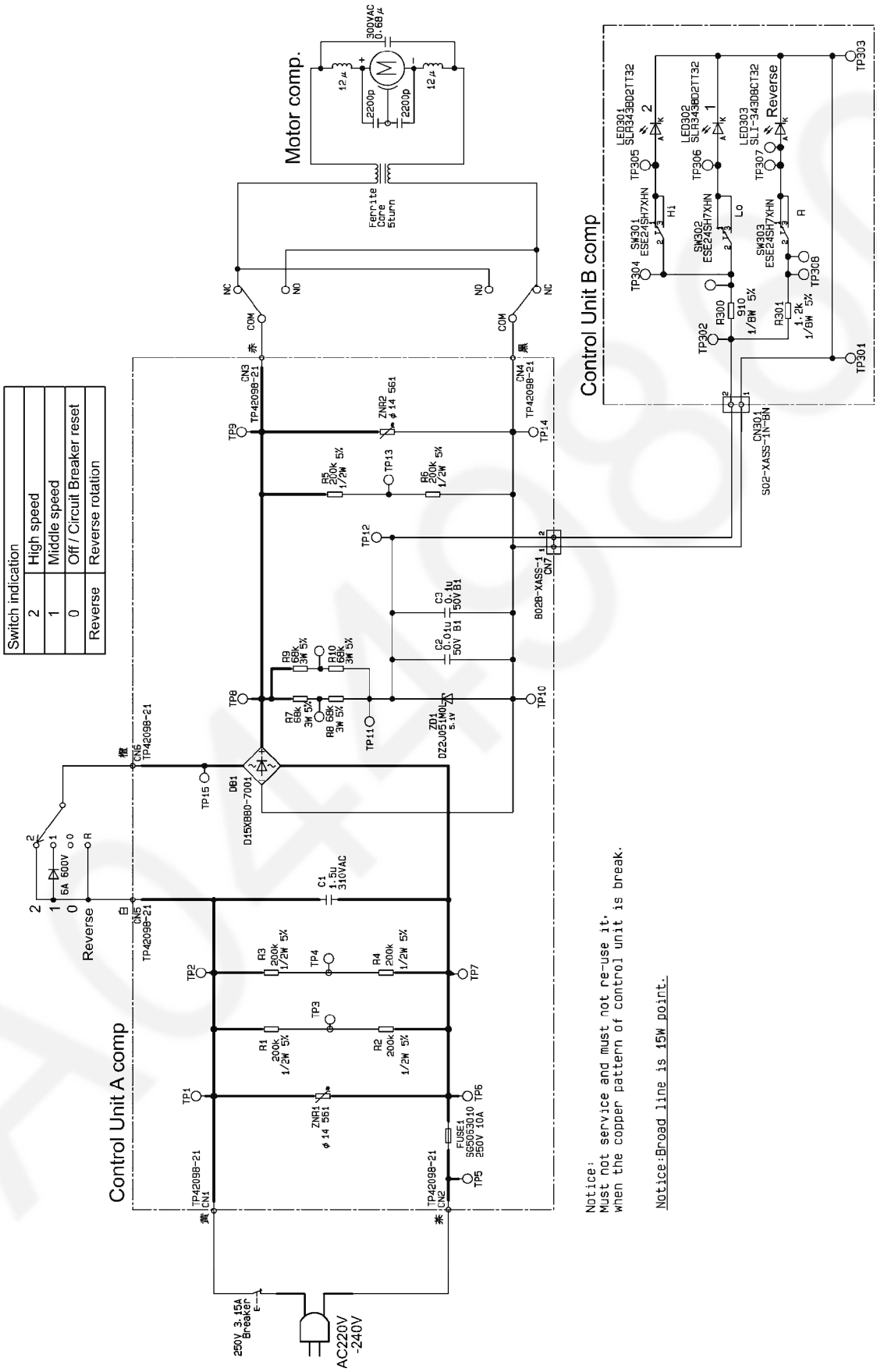

[MK-ZJ2700]

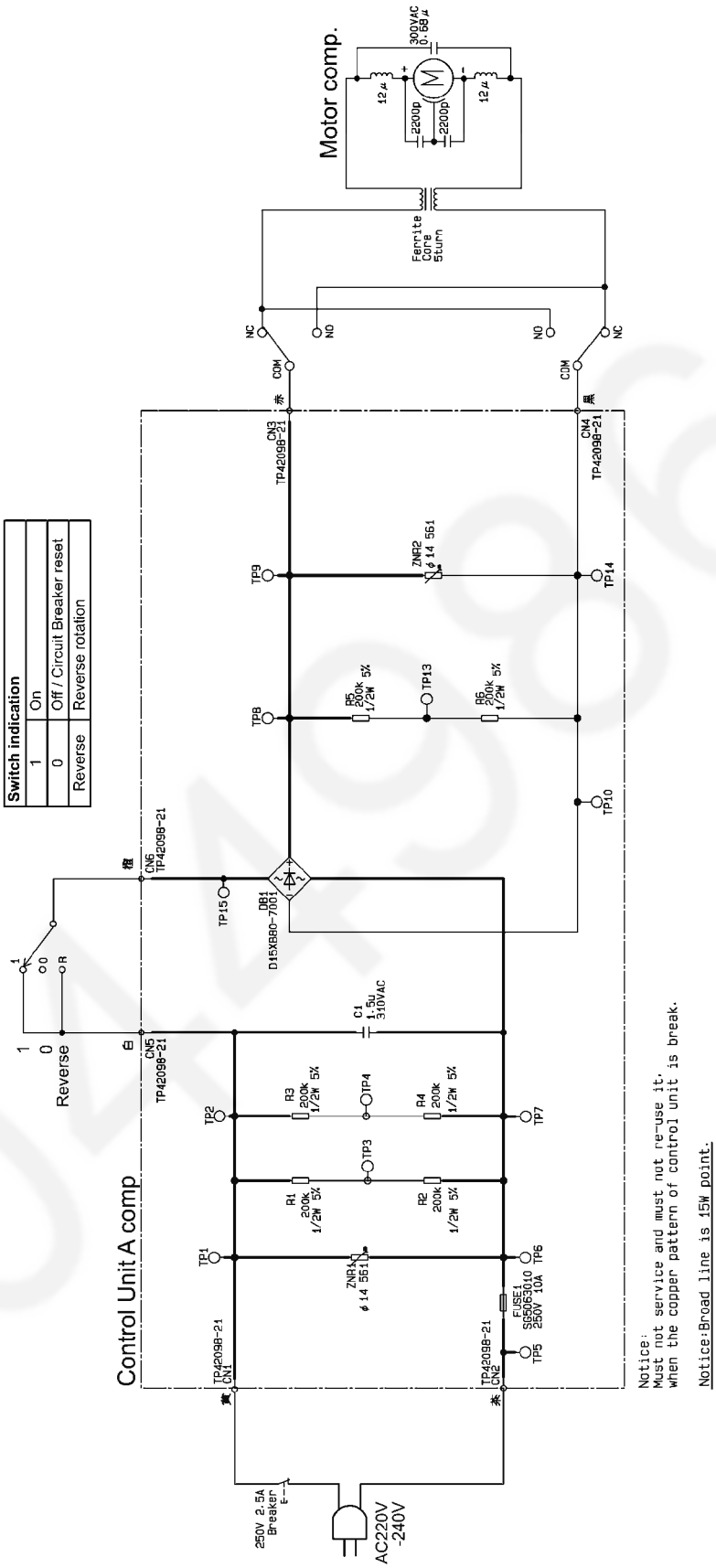
Motor comp.
300VAC 0.68μ
12μ
2200p
2200p
12μ
Ferrite core 5turn
NC
NO
NO
NC
COM
COM
赤
黒
CN3 TP4209B-21
CN4 TP4209B-21
ZNR2 φ14 561
TP9
TP14
TP8
R5 200k 1/2W 5%
TP13
R6 200k 1/2W 5%
TP10
Switch indication
1 On
0 Off / Circuit Breaker reset
Reverse Reverse rotation
橙
CN6 TP4209B-21
TP15
DB1 D15XB80-7001
1
0
R
Reverse
白
CN5 TP4209B-21
C1 1.5U 310VAC
TP2
R3 200k 1/2W 5%
TP4
R4 200k 1/2W 5%
TP7
TP3
R1 200k 1/2W 5%
R2 200k 1/2W 5%
TP1
ZNR1 φ14 561
FUSE1 SG6G510 250V 10A
TP6
TP5
Control Unit A comp
TP4209B-21 CN1
TP4209B-21 CN2
黒
赤
250V 2.5A Breaker
AC220V -240V
Notice:
Must not service and must not re-use it.
when the copper pattern of control unit is break.
Notice:Broad line is 15W point.

9 Exploded View and Replacement Parts List

9.1. Parts Exploded View : MK-ZJ3500 / ZJ2700 (Body)

The part of the red inducation is an electrical component.

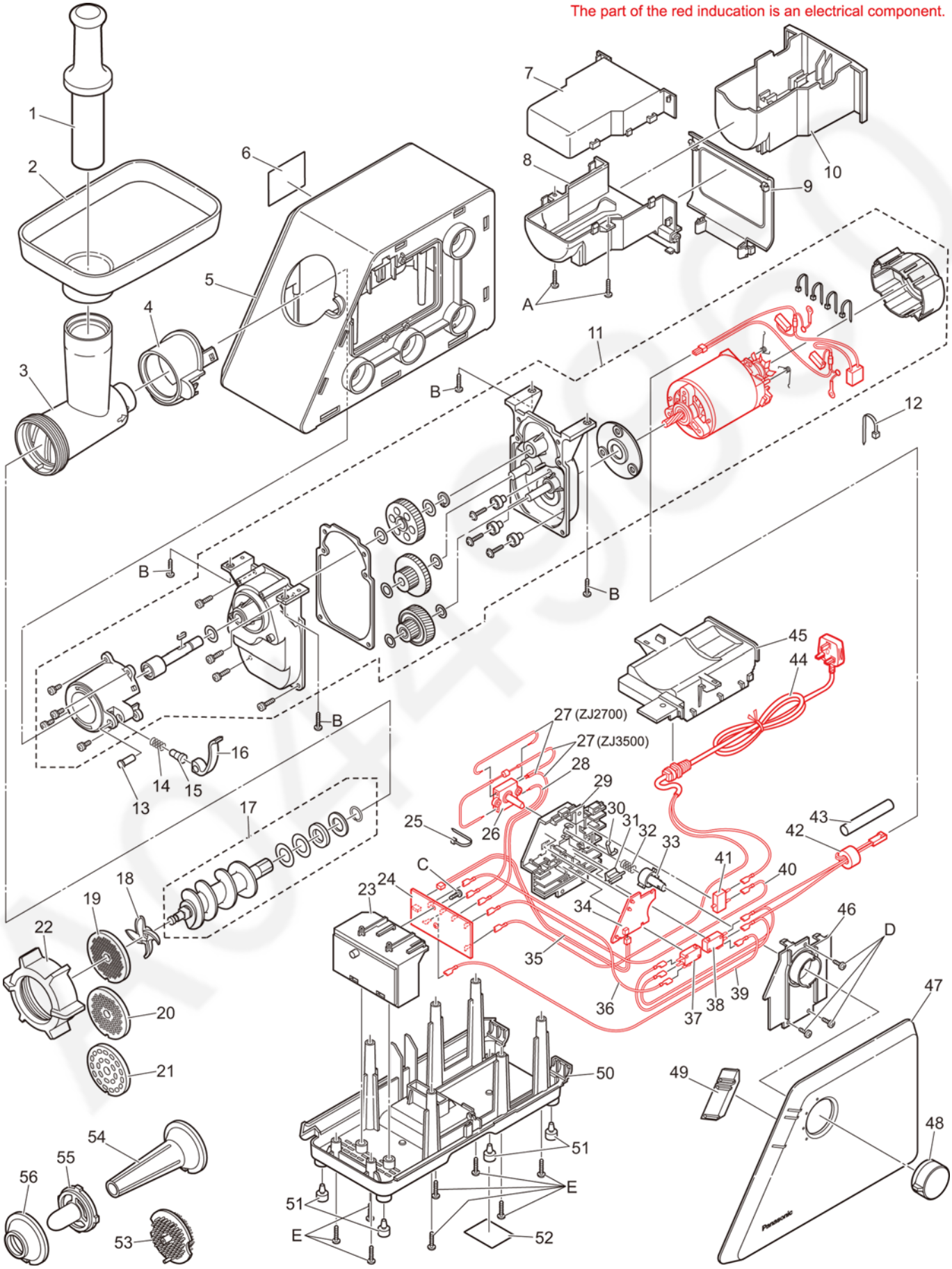

9.2. Replacement Parts List : MK-ZJ3500 / ZJ2700

Notes:Important safety notice

- Components identified by ⚠ mark have special characteristics important for safety.
- " When replacing any of these components use only manufacturer's specified parts."

Safety	Ref. No.	Part No.	Part Name & Description	Pcs/Set				Remarks
				ZJ2700KTZ	ZJ2700KTN	ZJ3500KTZ	ZJ3500KTN	
		< MAIN_PARTS >						
	1	AME04-109-K0	Food pusher	1	1	1	1	
	2	AME03J148	Hopper plate	1	1	1	1	
	3	AME99-109	Grinder head	1	1	1	1	
	4	AMB64J148-K0	Unit cover	1	1	1	1	
	5	AMB99J148-K0	Body ass'y	1	1	1	1	
⚠	6	AMY03Y131	Caution label	1	1	1	1	
	7	AMB11J148-K0	Storage part for attach-ment(upper)	1	1	1	1	
	8	AMB12J148-K0	Storage part for attach-ment(bottom)	1	1	1	1	
	9	AMB14J148-K0	Lid of cord storage	1	1	1	1	
	10	AMB22J148-K0	Storage part for attachment	1	1	1	1	
⚠	11	AMA08J14900S	Motor comp.	1	1			
⚠	11	AMA08J14800S	Motor comp.			1	1	
	12	AMP61J148	Wire band B	1	1	1	1	
	13	AME56J148	Handle shaft	1	1	1	1	
	14	MN16J148	Spring for lock pin	1	1	1	1	
	15	AME53J148	Lock pin	1	1	1	1	
	16	AMB65J148	Fixing lever	1	1	1	1	
⚠	17	AMM98C-300	Feed screw	1	1	1	1	
⚠	18	AME19J148	Cutting blade	1	1	1	1	
⚠	19	AME05-123	Cutting plate(fine)	1	1	1	1	
⚠	20	AMM10C-300	Cutting plate(medium)	1	1	1	1	
⚠	21	AMM19C-300	Cutting plate(coarse)	1	1	1	1	
	22	AMM02C-300	Grinder cap	1	1	1	1	
	23	AMB72J-149	P.C.B. case	1	1	1	1	
⚠	24	AMR30J149	P.C.B. (power)	1	1			
⚠	24	AMR30J148	P.C.B. (power)			1	1	
	25	AMP60J148	Wire band A	2	2	2	2	
⚠	26	AMN01J148	Rotary switch	1	1	1	1	
⚠	27	AMP93J149	Lead wire A	1	1			
⚠	27	AMP93J148	Lead wire A			1	1	
⚠	28	AMP89J148	Lead wire C	1	1	1	1	
	29	AMN13J148	Case of rotary switch	1	1	1	1	
	30	AMH36J148	Spring for breaker	1	1	1	1	
	31	AMN04J148	Lever for come-from-behind reshuffling	1	1	1	1	
	32	AMN17J148	Spring for switch cam	1	1	1	1	
	33	AMN15J148	Switch cam	1	1	1	1	
⚠	34	AMR31J148	P.C.B. (LED)			1	1	
⚠	35	AMP81J148	Cable unit			1	1	
⚠	36	AMP88J148	Lead wire D	1	1	1	1	
⚠	37	AMN02J148	Reshuffling switch	1	1	1	1	
⚠	38	AMN02J148	Reshuffling switch	1	1	1	1	
⚠	39	AMP87J148	Lead wire E	1	1	1	1	
⚠	40	AMP84J148	Lead wire H	1	1	1	1	
⚠	41	AMN12J149	Breaker	1	1			
⚠	41	AMN12J148	Breaker			1	1	
⚠	42	AMP82J148	Lead wire for motor	1	1	1	1	
	43	AMP31J148	Protection tube	1	1	1	1	
⚠	44	AMP91J148	Power cord	1		1		AC220V S3 plug
⚠	44	AMP96Q148	Power cord		1		1	AC220V C2 plug
	45	AMB13J148-K0	Cord box	1	1	1	1	
	46	AMN14J148-K	Cover of rotary switch	1	1	1	1	
	47	AMB91J149-K0	Body(left)	1	1			
	47	AMB91J148-K0	Body(left)			1	1	
	48	AMN99J148	Switch knob	1	1	1	1	
	49	AMB62J148	LED cover			1	1	
	50	AMB23J148-K0	Bottom plate	1	1	1	1	
	51	AMM33A-090	Foot	4	4	4	4	
⚠	52	AMY10J149	Rating plate	1				
⚠	52	AMY10Q149	Rating plate		1			
⚠	52	AMY10J148	Rating plate			1		

Safety	Ref. No.	Part No.	Part Name & Description	Pcs/Set				Remarks
				ZJ2700KTZ	ZJ2700KTN	ZJ3500KTZ	ZJ3500KTN	
⚠	52	AMY10Q148	Rating plate				1	
	53	AMD25J148-W0	Cleaning tool	1	1	1	1	
	54	AME07J148-W0	Sausage attachment	1	1	1	1	
	55	AMM96C-300	Kubbe attachment B	1	1	1	1	
	56	AMM24C-300W	Kubbe attachment A	1	1	1	1	
		< SMALL STANDARDIZED METAL PARTS >						
	A	XTN4+25BFJ	Screw	2	2	2	2	
	B	XTN4+25BFJ	Screw	4	4	4	4	
	C	XTN4+10GFJ	Screw	1	1	1	1	
	D	XTN4+10GFJ	Screw	3	3	3	3	
	E	XTN4T20BFJ	Screw	8	8	8	8	
		< PACKING SPECIFICATIONS >						
		AMZ01J149	Outer carton	1	1			
		AMZ01J148	Outer carton			1	1	
		AMZ10J149	POS label	1				
		AMZ10Q149	POS label		1			
		AMZ10J148	POS label			1		
		AMZ10Q148	POS label				1	
		AMZ02J148	Protection A	1	1	1	1	Top
		AMZ03J148	Protection B	1	1	1	1	Bootom
		AMZ22J148	Pad	1	1	1	1	
⚠		AMZ99J148	Operating instructions	1		1		
⚠		AMZ50J148	Operating instructions		1		1	
		AMZ05J148	Patch(hopper plate)	1	1	1	1	
		AMZ06J148	Patch(grinder head)	1	1	1	1	
		XZB15X55A015	Plastic bag	1	1	1	1	For cord

A044900