PSG1504008CE

Service Manual

Speaker System

Model No. SB-MAF6000PU
SB-MAF6000GS
SB-MAG6000PU
SB-MAG6000GS
SB-MAW6000PU
SB-MAW6000GS
SB-MAX6000PU
SB-MAX6000GS

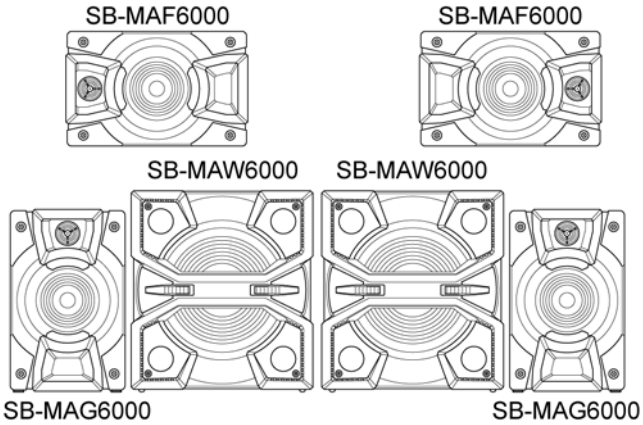

Product Color : (K)... Black Type

⚠ WARNING

This service information is designed for experienced repair technicians only and is not designed for use by the general public. It does not contain warnings or cautions to advise non-technical individuals of potential dangers in attempting to service a product. Products powered by electricity should be serviced or repaired only by experienced professional technicians. Any attempt to service or repair the product or products dealt with in this service information by anyone else could result in serious injury or death.

IMPORTANT SAFETY NOTICE

There are special components used in this equipment which are important for safety. These parts are marked by ⚠ in the Schematic Diagrams, Circuit Board Diagrams, Exploded Views and Replacement Parts List. It is essential that these critical parts should be replaced with manufacturer's specified parts to prevent shock, fire or other hazards. Do not modify the original design without permission of manufacturer.

TABLE OF CONTENTS

PAGE

1 Specifications ---------- **2**
2 Disassembly and Assembly Instructions ---------- **2**
2.1. Type of screws ---------- 3
2.2. Speakers (SB-MAF6000PU/GS, SB-MAG6000PU/GS) ---------- 3
2.3. Subwoofer Speaker (SA-MAW6000PU/GS) -------- 5
3 Wiring Connection Diagram ---------- **9**
3.1. Speakers (SB-MAF6000PU/GS, SB-MAG6000PU/GS) ---------- 9
3.2. Subwoofer Speaker (SA-MAW6000PU/GS) -------- 9
4 Exploded View and Replacement Parts List ---------- **11**
4.1. Cabinet Parts Location (SB-MAF6000PU/GS, SB-MAG6000PU/GS) ---------- 11

PAGE

4.2. Cabinet Parts Location (SA-MAW6000PU/GS) ---------- 12
4.3. Packaging (SB-MAX6000PU/GS) ---------- 13
4.4. Replacement Parts List ---------- 15

Panasonic®

© Panasonic Corporation 2015. All rights reserved. Unauthorized copying and distribution is a violation of law.

1 Specifications

Speakers (SB-MAF6000PU/GS, SB-MAG6000PU/GS)	
Speaker unit(s)	
Tweeter	6 cm cone type
Woofer	20 cm cone type
Impedance	3 Ω
Dimensions (W x H x D)	407 mm x 260 mm x 258 mm
Mass	5.5 kg

Subwoofer Speaker (SA-MAW6000PU/GS)	
Speaker unit(s)	
Super Woofer	30 cm Cone type
Impedance	6 Ω
Dimensions (W x H x D)	402 mm x 450 mm x 386 mm
Mass	13 kg

Notes:

1. Specifications are subject to change without notice.
Mass and dimensions are approximate.
2. Total harmonic distortion is measured by the digital spectrum analyzer.

2 Disassembly and Assembly Instructions

Caution Note:

- This section describes procedures for checking the operation and replacing the main components.
- For reassembly after operation checks or replacement, reverse the respective procedures.
- Special reassembly procedures are described only when required.
- Before carrying out the disassembly process, please ensure all the safety precautions & procedures are followed.
- During the disassembly and/or assembly process, please handle with care as there may be chassis components with sharp edges.
- During replacement of component parts, please refer to the section of “Replacement Parts List” as described in the service manual.
- Select items from the following indexes when disassembly or replacement are required.

Speakers (SB-MAF6000PU/GS, SB-MAG6000PU/GS)

- Disassembly of Front Panel Block
- Disassembly of Tweeter Speaker (SP1)
- Disassembly of Woofer Speaker (SP2)
- Disassembly of Lighting Wire P.C.B. Assembly

Subwoofer Speaker (SA-MAW6000PU/GS)

- Disassembly of Front Panel Block
- Disassembly of Subwoofer Speaker (SP3)
- Disassembly of Lighting Wire P.C.B. Assembly

2.1. Type of screws

2.1.1. Speakers (SB-MAF6000PU/GS, SB-MAG6000PU/GS)

CAUTION NOTE:
Please use original screw and at correct locations.

Below shown is part no. of different screw types used:

- ⓐ : XTB4+16AFJK
- ⓑ : XTB4+10GFJ
- ⓒ : XTB3+10GFJK

2.1.2. Subwoofer Speaker (SA-MAW6000PU/GS)

CAUTION NOTE:
Please use original screw and at correct locations.

Below shown is part no. of different screw types used:

- ⓐ : XTB4+16AFJK
- ⓑ : XTB4+20AFJK
- ⓒ : XTB4+10GFJ
- ⓓ : XTB3+10GFJK

2.2. Speakers (SB-MAF6000PU/GS, SB-MAG6000PU/GS)

2.2.1. Disassembly of Front Panel Block

Step 1 : Remove 4 screws.

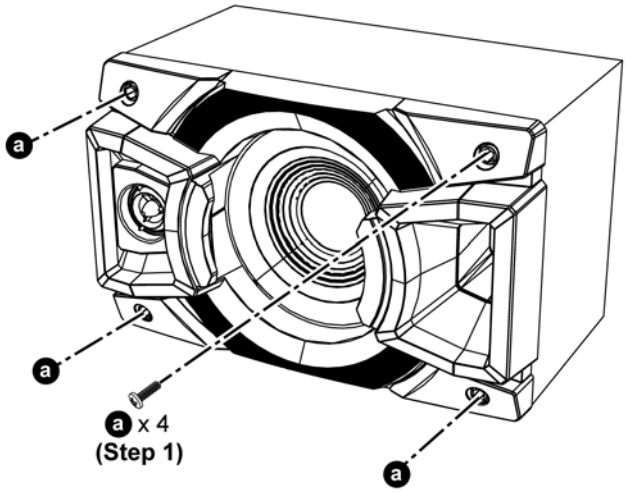

Step 2 : Insert flathead screwdriver into the grooves.
Step 3 : Insert a steel rule between the Front Panel Block and Speaker Cabinet.
Step 4 : Apply light force to push the Front Panel Block.
Caution : Do not exert strong force as it may damage the Front Panel Block
Step 5 : Detach Front Panel Block.

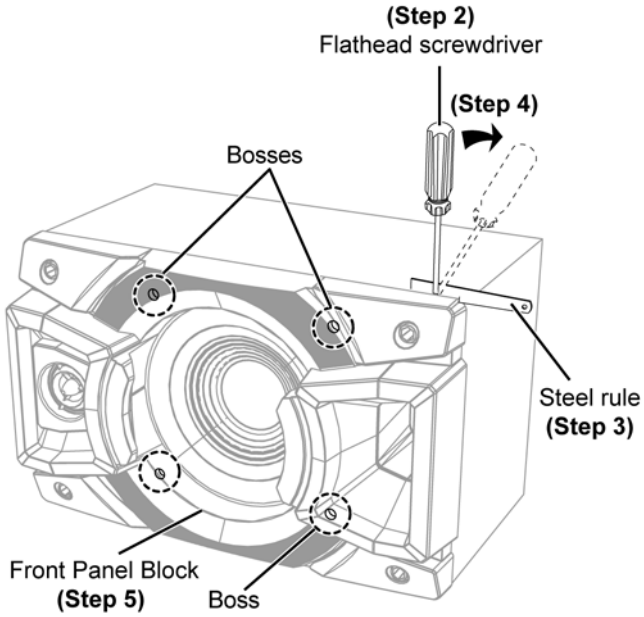

Step 6 : Detach speaker wire.
Step 7 : Lift up the Himelon.
Step 8 : Detach 4P Socket.
Step 9 : Remove Front Panel Block.

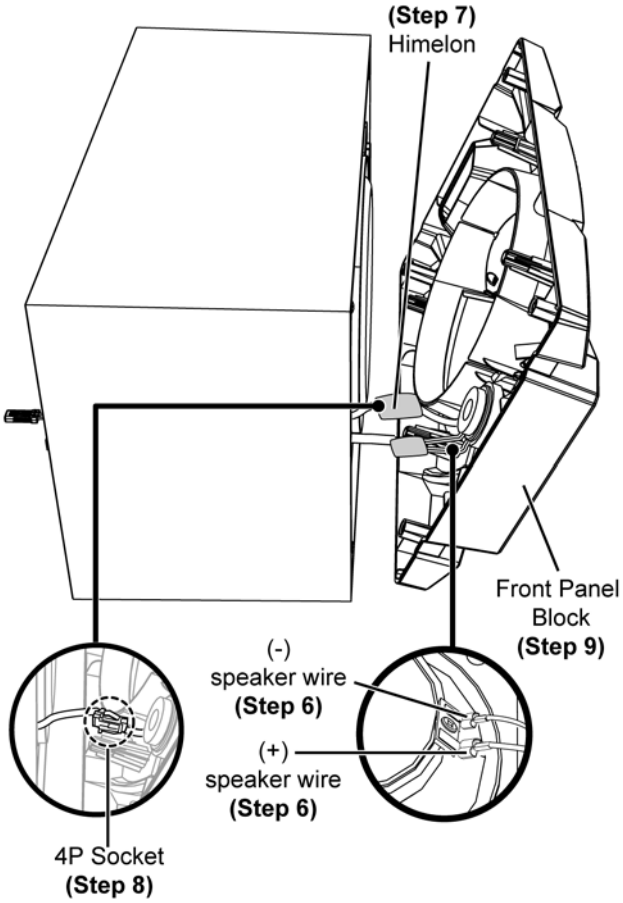

During assembling, please do following
Step 1 : Remove and clean up the bosses and holes.
Step 2 : Align the bosses of Front Panel Block to the holes of Speaker Cabinet.
Step 3 : Press the Front Panel Block tightly.

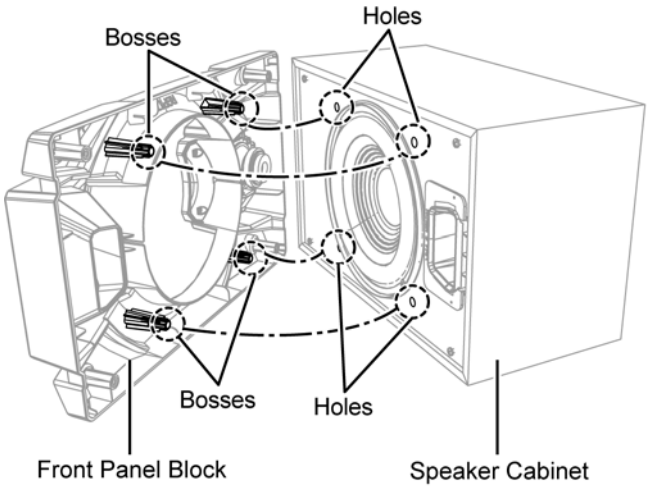

2.2.2. Disassembly of Tweeter Speaker (SP1)

- Refer to “Disassembly of Front Panel Block”

Step 1 : Remove 4 screws.
Step 2 : Remove Tweeter Speaker (SP1).

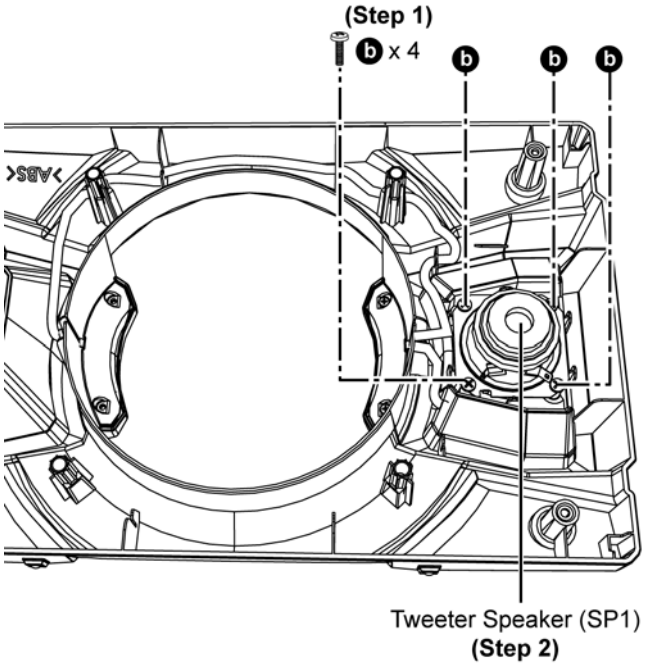

2.2.3. Disassembly of Woofer Speaker (SP2)

- Refer to “Disassembly of Front Panel Block”

Step 1 : Remove 4 screws.

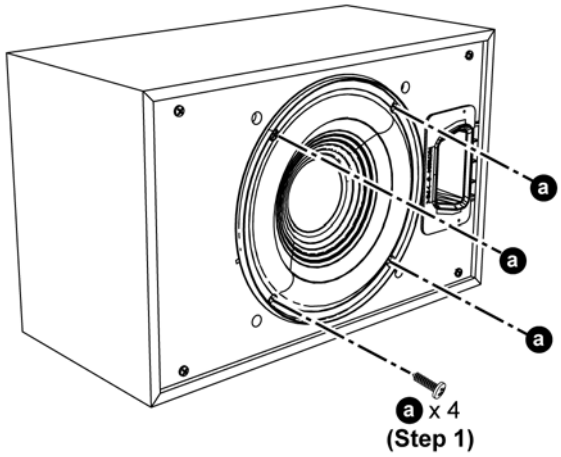

Step 2 : Slightly lift up Woofer Speaker (SP2).
Step 3 : Detach speaker wire.
Step 4 : Remove Woofer Speaker (SP2).

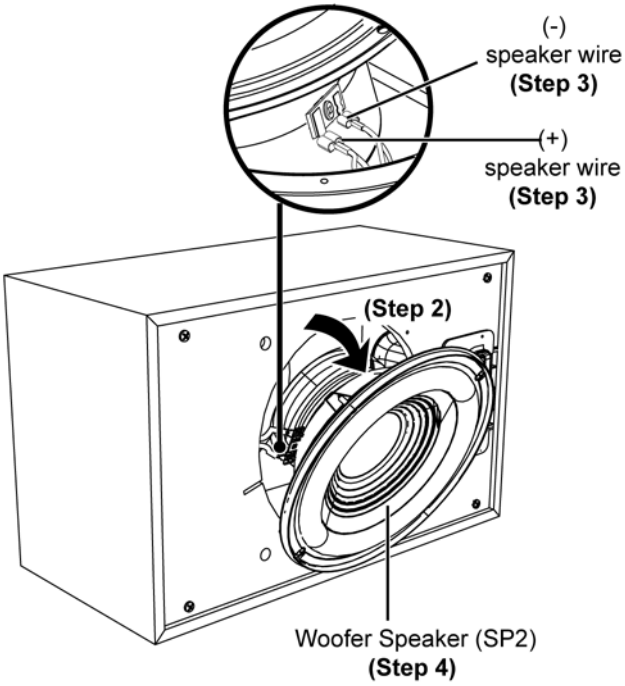

2.2.4. Disassembly of Lighting Wire P.C.B. Assembly

- Refer to “Disassembly of Front Panel Block”

Step 1 : Remove 4 screws.
Step 2 : Release wire from the slots.
Step 3 : Remove Lighting Wire P.C.B. Assembly Unit.

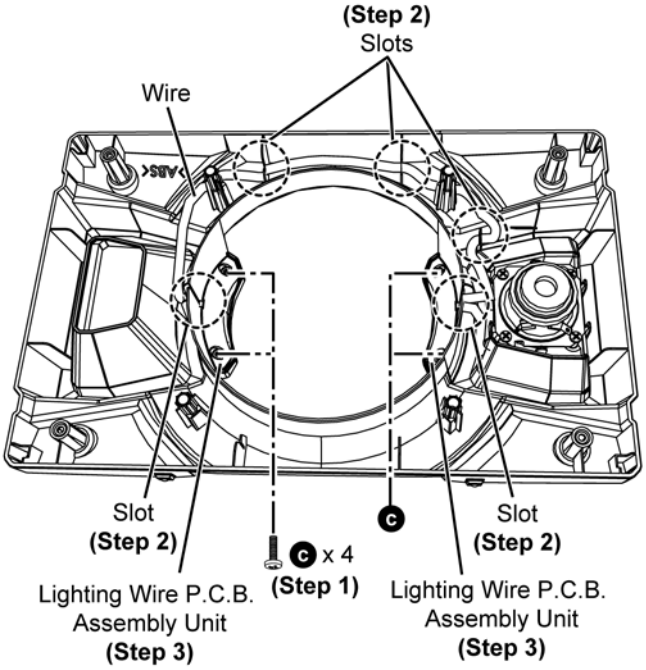

Step 4 : Remove 4 screws.
Step 5 : Remove Lighting Wire P.C.B. Assembly.

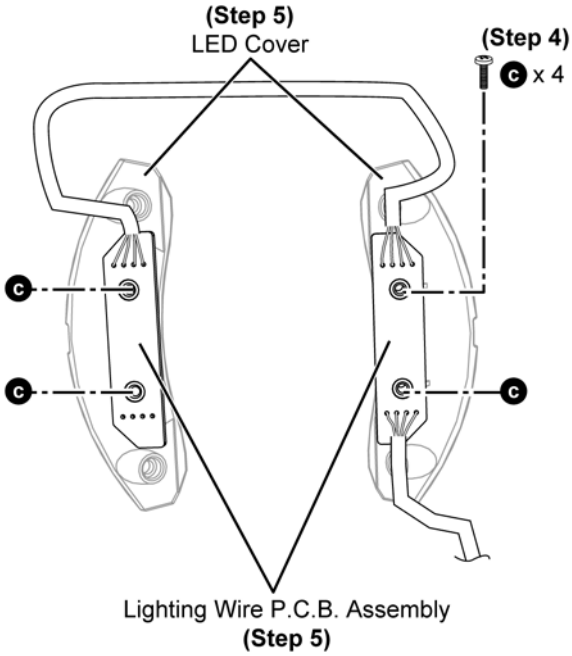

2.3. Subwoofer Speaker (SA-MAW6000PU/GS)

2.3.1. Disassembly of Front Panel Block

Step 1 : Remove 4 screws.

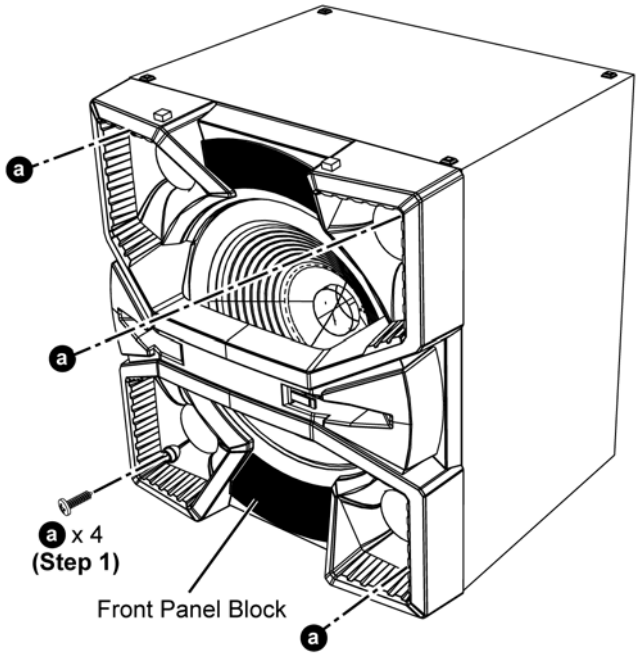

Step 2 : Insert flathead screwdriver into the grooves.
Step 3 : Insert a steel rule between the Front Panel Block and Speaker Cabinet.
Step 4 : Apply light force to push the Front Panel Block.
Caution : Do not exert strong force as it may damage the Front Panel Block.
Step 5 : Detach Front Panel Block.

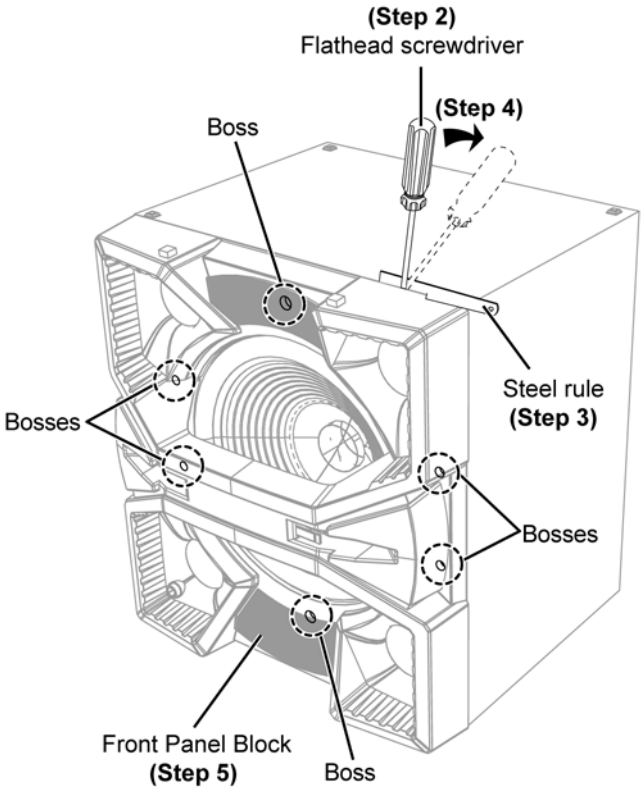

Step 6 : Lift up the Himelon.
Step 7 : Detach 4P Socket.
Step 8 : Remove Front Panel Block.

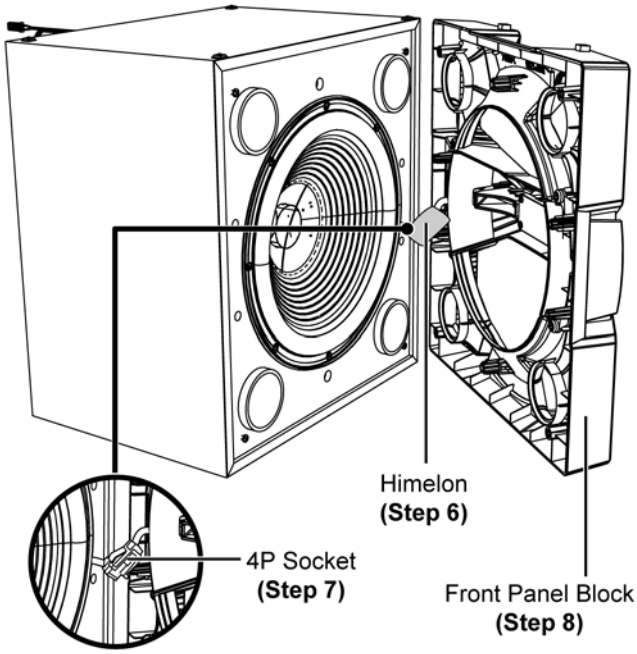

During assembling, please do following
Step 1 : Remove and clean up the bosses and holes.
Step 2 : Align the bosses of Front Panel Block to the holes of Speaker Cabinet.
Step 3 : Press the Front Panel Block tightly.

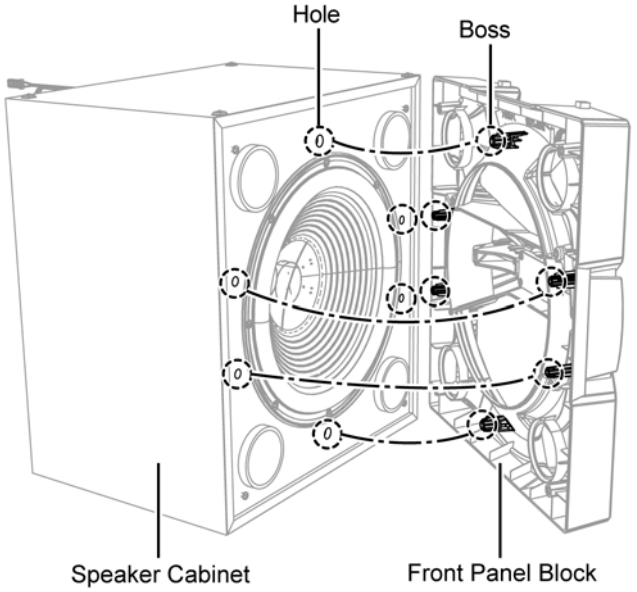

2.3.2. Disassembly of Subwoofer Speaker (SP3)

- Refer to “Disassembly of Front Panel Block”

Step 1 : Remove 8 screws.

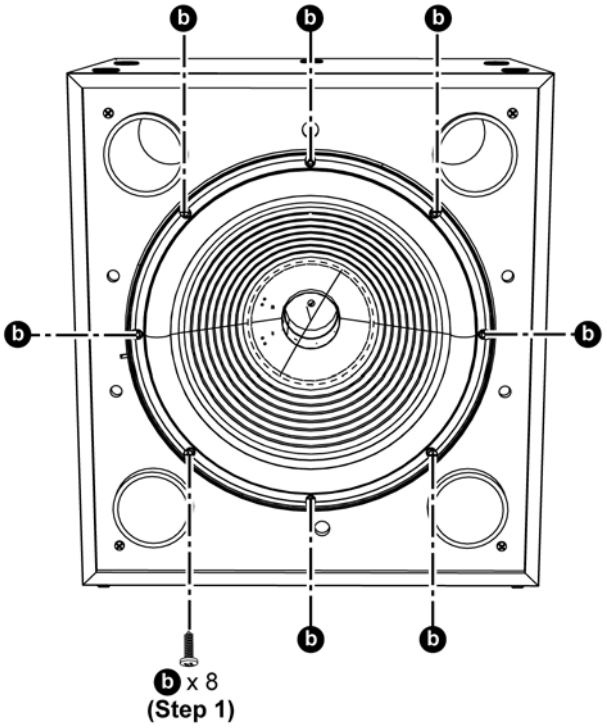

Step 2 : Slightly lift up Subwoofer Speaker (SP3).
Step 3 : Detach speaker wire.
Step 4 : Remove Subwoofer Speaker (SP3).

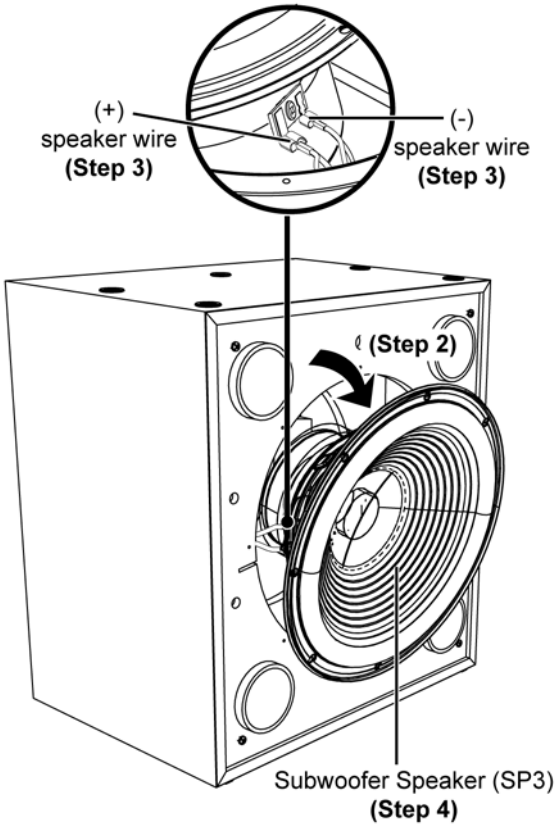

2.3.3. Disassembly of Lighting Wire P.C.B. Assembly

- Refer to “Disassembly of Front Panel Block”

Step 1 : Release the 4P wire from Front Panel Block.
Step 2 : Remove 4 screws.
Step 3 : Remove Lighting Cover.

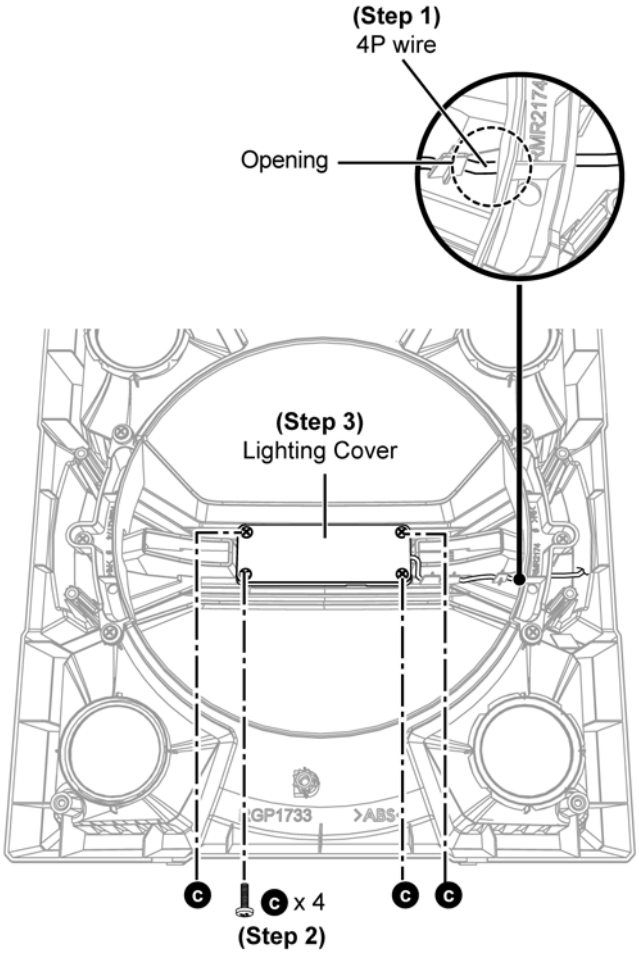

Step 4 : Release 4P wire from the slots.
Step 5 : Remove 2 screws.
Step 6 : Remove Lighting Wire P.C.B. Assembly.

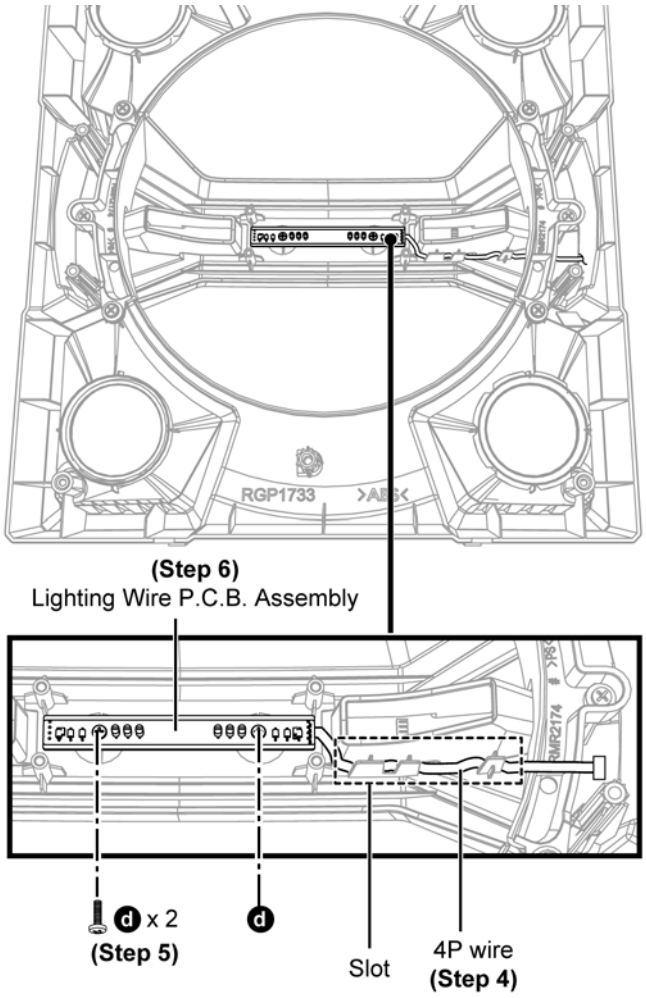

3 Wiring Connection Diagram

3.1. Speakers (SB-MAF6000PU/GS, SB-MAG6000PU/GS)

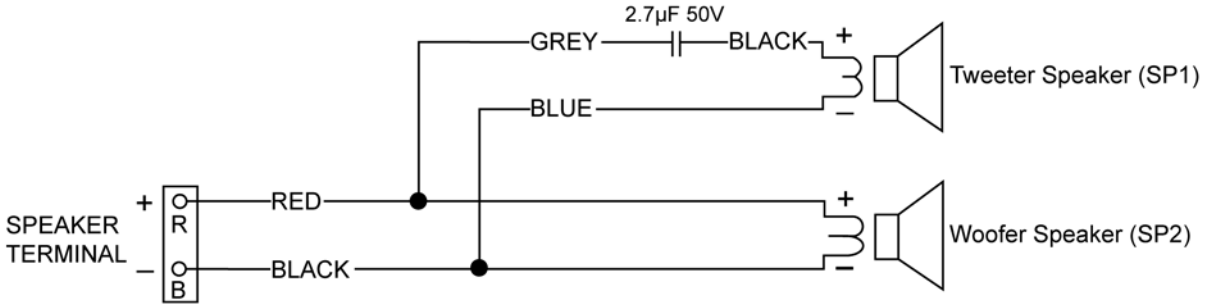

3.2. Subwoofer Speaker (SA-MAW6000PU/GS)

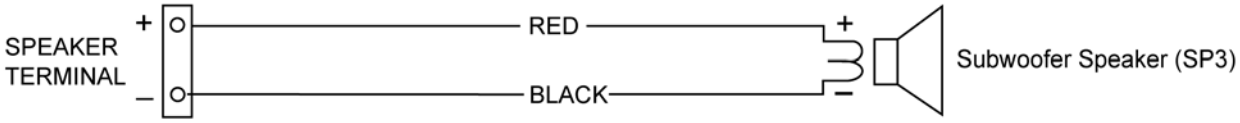

4 Exploded View and Replacement Parts List

4.1. Cabinet Parts Location (SB-MAF6000PU/GS, SB-MAG6000PU/GS)

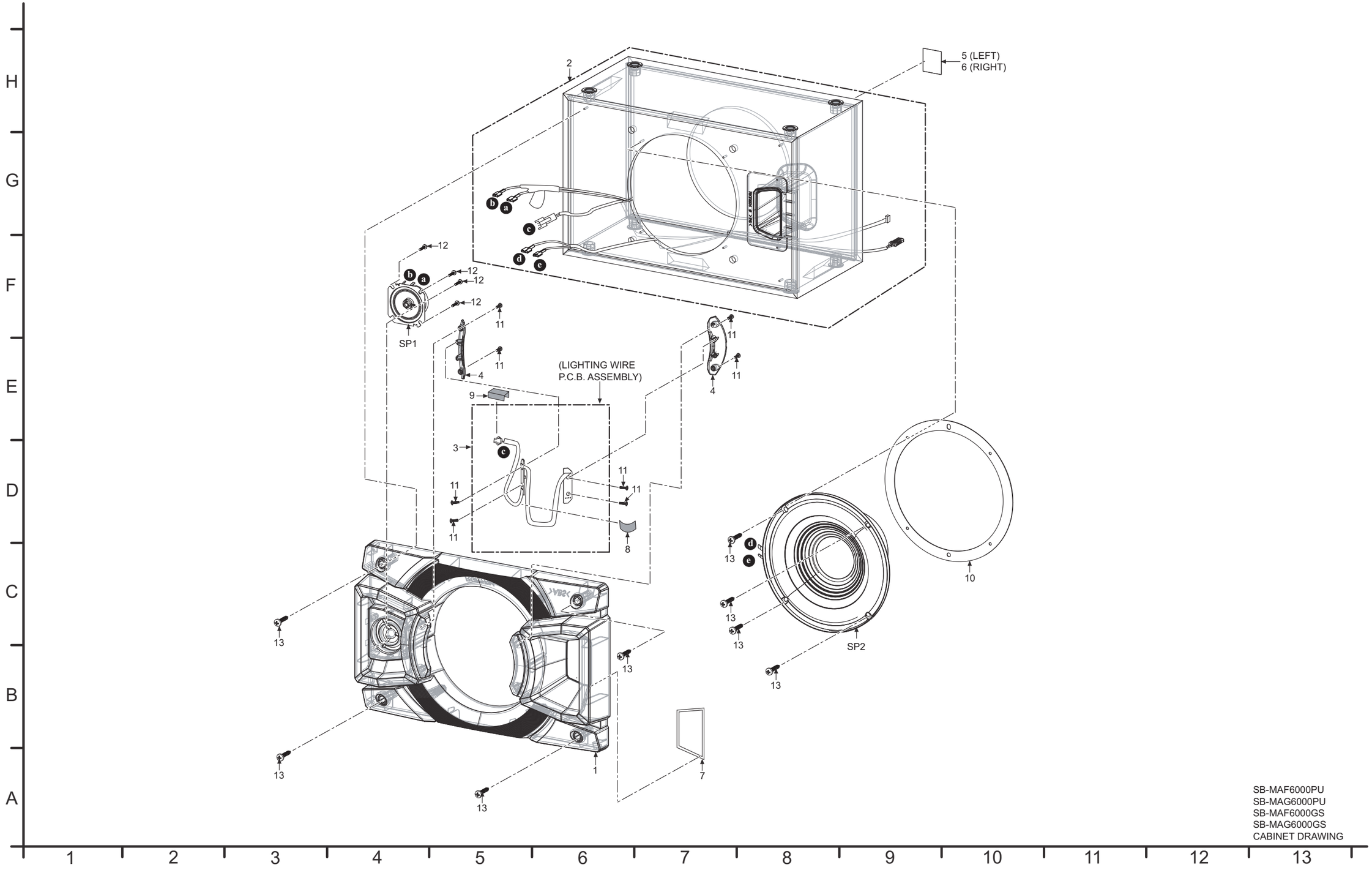

4.2. Cabinet Parts Location (SA-MAW6000PU/GS)

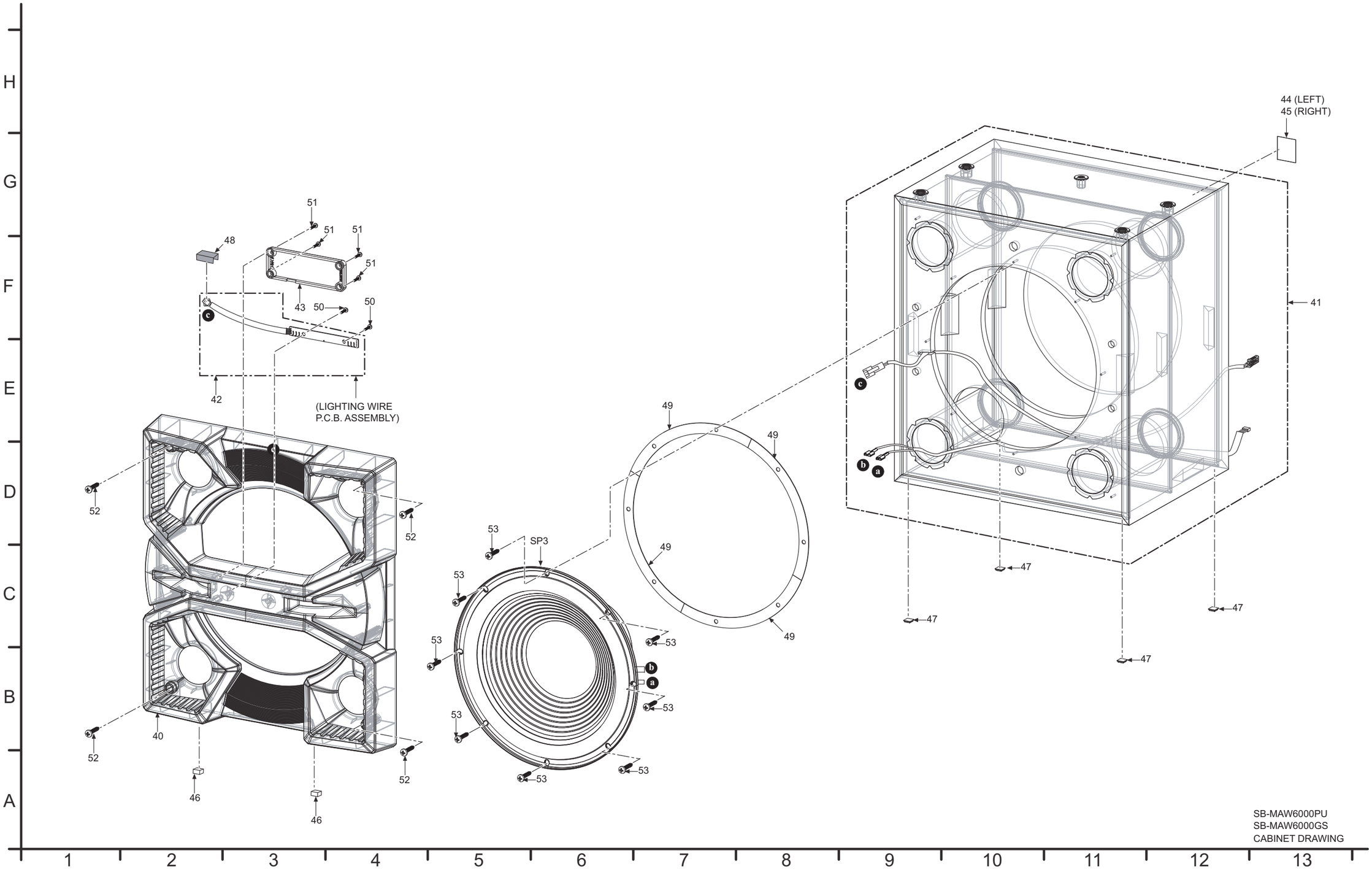

4.3. Packaging (SB-MAX6000PU/GS)

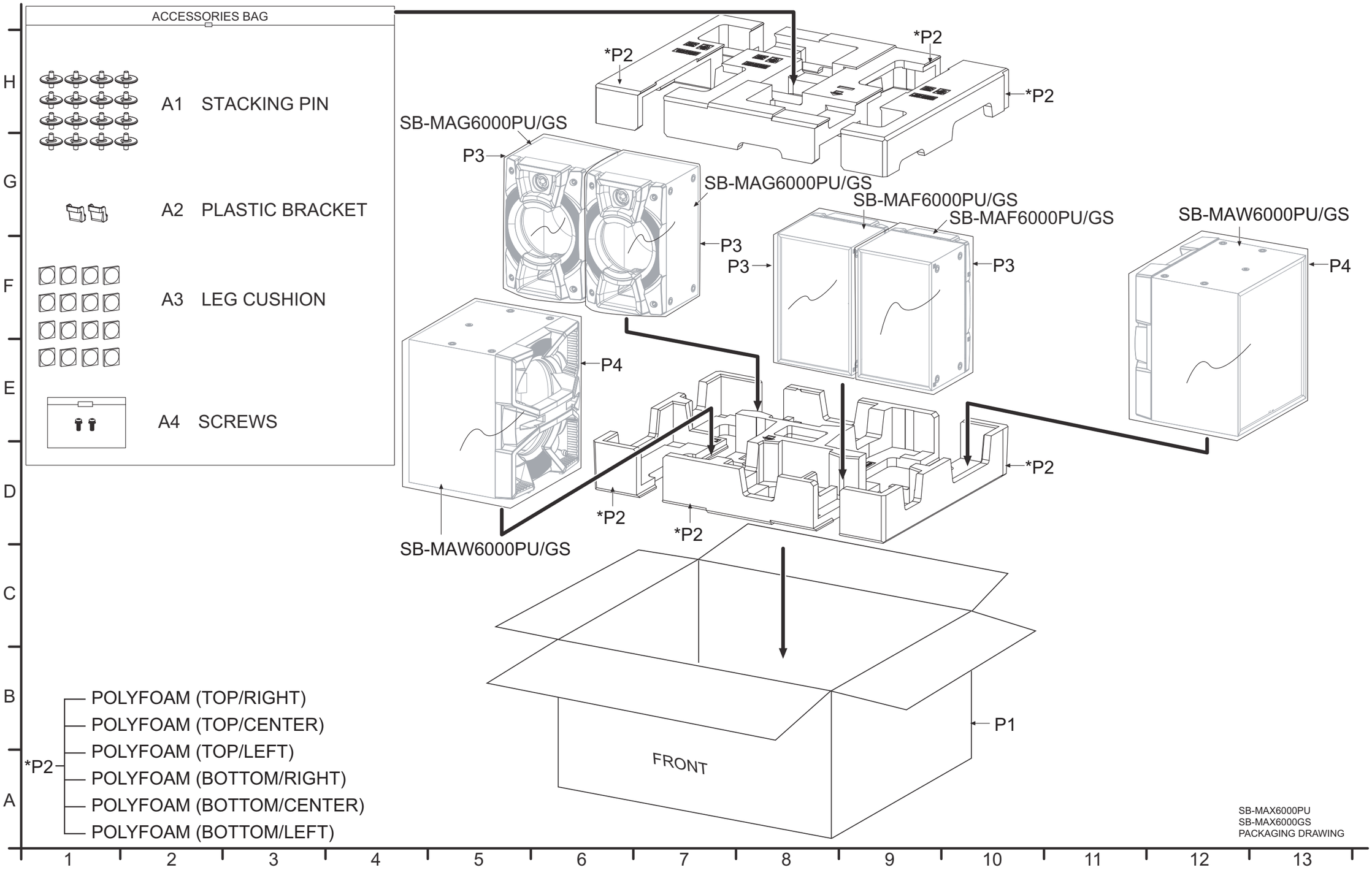

4.4. Replacement Parts List

Important Safety Notice

Components identified by ⚠ mark have special characteristics important for safety.
When replacing any of these components, use only manufacturer's specified parts.

RTL (Retention Time Limited)

Note: The marking (RTL) indicates that the Retention Time is Limited for this item.
After the discontinuation of this assembly in production, the item will continue to be available for a specific period of time. The retention period of availability is dependant on the type of assembly, and in accordance with the laws governing part and product retention. After the end of this period, the assembly will no longer be available.

Note:
- When replacing any of these components, be sure to use only manufacturer's specified parts shown in the replacement part list.
- The parenthesized indications on the Remarks column specify the destination & product color (Refer to the cover page for the information).
- Parts without these indications shall be used for all areas.
- All parts mentioned are supplied by PAVCJM unless indicated likewise.

4.4.1. Speakers (SB-MAF6000PU/GS, SB-MAG6000PU/GS)

Safety	Ref. No.	Part No.	Part Name & Description	Qty	Remarks
			CABINET & CHASSIS		
	1	RYP2077A-K	FRONT PANEL UPPER ASS'Y	1	
	2	RYQ1563A-KJ	WOODEN BOX ASS'Y (R)	1	MAF6000 PU
	2	RYQ1563A-K	WOODEN BOX ASS'Y (R)	1	MAF6000 GS
	2	RYQ1563C-KJ	WOODEN BOX ASS'Y (R)	1	MAG6000 PU
	2	RYQ1563C-K	WOODEN BOX ASS'Y (R)	1	MAG6000 GS
	2	RYQ1563-KJ	WOODEN BOX ASS'Y (L)	1	MAF6000 PU
	2	RYQ1563-K	WOODEN BOX ASS'Y (L)	1	MAF6000 GS
	2	RYQ1563B-KJ	WOODEN BOX ASS'Y (L)	1	MAG6000 PU
	2	RYQ1563B-K	WOODEN BOX ASS'Y (L)	1	MAG6000 GS
	3	REE2064-1	LIGHTING WIRE PCB ASS'Y	1	MAG6000
	3	REE2064A-1	LIGHTING WIRE PCB ASS'Y	1	MAF6000
	4	RGL0820-Q	LED COVER	2	
	5	RGN3537-K	SPEC LABEL L	1	MAF6000 PU
	5	RGN3513-K	SPEC LABEL L	1	MAF6000 GS
	5	RGN3538-K	SPEC LABEL L	1	MAG6000 PU
	5	RGN3512-K	SPEC LABEL L	1	MAG6000 GS
	6	RGN3537A-K	SPEC LABEL R	1	MAF6000 PU
	6	RGN3513A-K	SPEC LABEL R	1	MAF6000 GS
	6	RGN3538A-K	SPEC LABEL R	1	MAG6000 PU
	6	RGN3512A-K	SPEC LABEL R	1	MAG6000 GS
	7	RMF0752-J	HIMELON (PORT UPPER)	1	MAF6000 PU/ MAG6000 PU
	7	RMF0752	HIMELON (PORT UPPER)	1	MAF6000 GS/ MAG6000 GS
	8	RMF0781-J	HIMELON (FOR LIGHTING WIRE)	1	MAF6000 PU/ MAG6000 PU
	8	RMF0781	HIMELON (FOR LIGHTING WIRE)	1	MAF6000 GS/ MAG6000 GS
	9	RMQ2070-J	EVA PACKING	1	MAF6000 PU/ MAG6000 PU
	9	RMQ2070	EVA PACKING	1	MAF6000 GS/ MAG6000 GS
	10	RMQX0285-K	EVA PACKING	1	
	11	XTB3+10GFJK	SCREW	8	
	12	XTB4+10GFJ	SCREW	4	
	13	XTB4+16AFJK	SCREW	8	
			SPEAKER UNITS		
	SP1	L0AA06A00113	TWEETER SPEAKER (6CM)	1	
	SP2	L0AA20A00041	WOOFER SPEAKER (20CM)	1	

4.4.2. Subwoofer Speakers (SA-MAW6000PU/GS)

Safety	Ref. No.	Part No.	Part Name & Description	Qty	Remarks
			CABINET & CHAS-SIS		
	40	RYP2080-KJ	FRONT PANEL LOWER ASS'Y	1	MAW6000 PU
	40	RYP2080-K	FRONT PANEL LOWER ASS'Y	1	MAW6000 GS
	41	RYQ1564-KJ	WOODEN BOX ASSY (SW)	1	MAW6000 PU
	41	RYQ1564-K	WOODEN BOX ASSY (SW)	1	MAW6000 GS
	42	REE1979A	LIGHTING WIRE PCB ASS'Y	1	
	43	RGL0818-QJ	LIGHTING COVER	1	MAW6000 PU
	43	RGL0818-Q	LIGHTING COVER	1	MAW6000 GS
	44	RGN3539-K	SPEC LABEL L	1	MAW6000 PU
	44	RGN3511-K	SPEC LABEL L	1	MAW6000 GS
	45	RGN3539A-K	SPEC LABEL R	1	MAW6000 PU
	45	RGN3511A-K	SPEC LABEL R	1	MAW6000 GS
	46	RKA0229-K	LEG CUSHION	2	
	47	RKA0346-K	LEG CUSHION	4	
	48	RMQ2070-J	EVA PACKING	1	MAW6000 PU
	48	RMQ2070	EVA PACKING	1	MAW6000 GS
	49	RMQ2431-J	EVA SHEET	4	MAW6000 PU
	49	RMQ2431	EVA SHEET	4	MAW6000 GS
	50	XTB3+10GFJK	SCREW	2	
	51	XTB4+10GFJ	SCREW	4	
	52	XTB4+16AFJK	SCREW	4	
	53	XTB4+20AFJK	SCREW	8	
			SPEAKER UNIT		
	SP3	L0AA30A00006	SUBWOOFER SPEAKER (30CM)	1	

4.4.3. Accessories and Packing Materials (SB-MAX6000PU/GS)

Safety	Ref. No.	Part No.	Part Name & Description	Qty	Remarks
			PACKING		
	P1	RPG0P34-1	PACKING CASE	1	MAX6000 PU
	P1	RPG0P36-1	PACKING CASE	1	MAX6000 GS
	P2	RPN2725-J	POLYFOAM	1	MAX6000 PU
	P2	RPN2725	POLYFOAM	1	MAX6000 GS
	P3	RPF0743-J	MIRAMAT BAG	4	MAX6000 PU
	P3	RPF0743	MIRAMAT BAG	4	MAX6000 GS
	P4	RPF0744-J	MIRAMAT BAG	2	MAX6000 PU
	P4	RPF0744	MIRAMAT BAG	2	MAX6000 GS
			ACCESSORIES		
	A1	RGQ0866-K	STACKING PIN	16	
	A2	RGQ0877-K	PLASTIC BRACKET	2	
	A3	RKA0072-KJ	LEG CUSHION	16	
	A4	XYN5+J14FJK	SCREW FOR WALL HOOK	2	

IPSG1504