ORDER NO.CHM0704016CE

Service Manual

Portable DVD/CD PLAYER

Model No. **DVD-LS80EB**
DVD-LS80EG
DVD-LS82EB
DVD-LS82EG

RAE1908Z-C Mechanism Series

Colour

(S).....Silver Type (LS82)

(K).....Black Type (LS80)

Specifications

Operating temperature range:	+5 to +35°C°
Operating humidity range:	5-85% RH (no condensation)
Region number:	Region No.2
Discs played [8cm or 12cm]:	DVD [DVD-Video, DivX(*5,9)[EG ONLY]],
	DVD-RAM [DVD-VR(*7), JPEG(*4,5,6), MP3(*2,5), [MPEG4(*5,8), DivX(*5.9)][EG ONLY]]
	DVD-R [DVD-Video, DVD-VR(*7), JPEG(*4,5,6), MP3(*2,5), [MPEG4(*5,8), DivX(*5.9)][EG ONLY]]
	DVD-R DL [DVD-Video, DVD-VR(*7)]
	DVD-RW [DVD-Video, DVD-VR(*7),JPEG(*4,5,6), MP3(*2,5), [MPEG4(*5,8), DivX(*5.9)][EG ONLY]]
	+R/RW (Video)
	+R DL (Video)
	CD, CD-R/RW [CD-DA, Video-CD, SVCD(*1), MP3(*2, 5), WMA(*3,5), JPEG(*4,5,6), MPEG4(*5,8), DivX(*5.9)[EG ONLY], HighMAT Level 2 (Audio and Image)]
	*1: Conforming to IEC62107
	*2: MPEG-1 Layer3, MPEG-2 Layer3
	*3: Windows Media Audio Ver9.0 L3. Not compatible with Multiple Bit Rate (MBR)
	*4: Exif Ver 2.1 JPEG Baseline files Picture resolution: between 160×120 and 6144×4096 pixels (sub sampling is 4:0:0, 4:2:0, 4:2:2 or 4:4:4)
	*5: The total combined maximum number of recognizable audio, picture and movie contents and groups: 4000 audio, picture and movie contents and 400 groups.
	*6: Extremely long and slender pictures may not be displayed.
	*7: CPRM doesn't cope with it.
	*8: MPEG4 data recorded with the Panasonic SD multi cameras or DVD recorders. Conforming to SD VIDEO specifications (ASF standard)/MPEG4 (Simple Profile) video specifications (ASF standard).
	*9: Plays all versions of DivX® video (including DivX® 6) with standard playback of DivX® media files. Certified to the DivX Home Theater Profile.
Signal system:	PAL/PAL 60(NTSC) selectable
LCD screen:	8.5" α-Si, TFT wide-screen LCD
Composite-video output/ input:	
Output/input level:	1Vp-p (75Ω)
Output/input terminal:	φ3.5mm mini-jack
Number of terminals:	1 system (output/input selectable)

Panasonic®

© 2007 Matsushita Electric Industrial Co., Ltd. All rights reserved. Unauthorized copying and distribution is a violation of law.

Audio output/input:

Output/input level: 1.5Vrms (1kHz, 0dB, 10kΩ)

Output/input terminal: Φ3.5mm stereo mini-jack

Number of terminals: 1 system (output/input selectable)

Audio performance:

(1) Frequency response:

●DVD (linear audio): 4Hz-22kHz (48kHz sampling)
4Hz-44kHz (96kHz sampling)

●CD audio: 4Hz-20kHz

(2) S/N ratio:

●CD audio: 115dB

(3) Dynamic range:

●DVD (linear audio): 91dB

●CD audio: 92dB

(4) Total harmonic distortion:

●CD audio: 0.01%

Headphone output:

Output: Φ3.5mm stereo mini-jack

Number of terminals: 2 systems

Battery duration (Hours):

Battery pack	Recharging (When the unit is off)	Play (at room temperature using headphones)			
		LCD brightess level			LCD Off
		-5	0	5	
CGR-H711*1	4	6	3.5	2.5	8
CGR-H702*2 CGR-H712*2	7	12	7	5	16
CGR-H701(option)	4	5.5	3	2	7

*1 included with DVD-LS80 (not available as option).

*2 included with DVD-LS82.

●Time indicated above may differ depending on use.

Pickup:

Wave length: 662nm/ 785nm (DVD/CD)

Laser power: CLASS 1M/ CLASS 1M (DVD/CD)

Power supply: DC 12V (DC IN terminal) /
DC 7.2V (Exclusive battery terminal)

Power consumption (Using included AC adaptor): 14W (Unit only: 12W)

Power consumption in Standby mode (Using included AC adaptor): approx 0.4W

Power consumption in Recharge mode (Using included AC adaptor): 12W

AC adaptor:

Power source: AC 100-240V, 50/60Hz

Power consumption: 22W

DC output: 12V, 1.3A

Car DC adaptor:

DC output: 12V 1.5A (Vehicle with 12V battery only)

Battery pack (lithium ion):

DVD-LS80

CGR-H711 (included):

Voltage: 7.2V

Capacity: 2250 mAh

DVD-LS82

CGR-H702 or CGR-H712 (included):

Voltage: 7.2V

Capacity:

CGR-H702 4700 mAh

CGR-H712 4500 mAh

Dimensions (WxDxH) (excluding protrusions and battery): 242.6 mm x 173.5 mm x 46.0* mm
*23.9mm at lowest point

DVD-LS80: [D=173.5mm including battery]
[H=46.6mm including battery]

DVD-LS82: [D=179.3mm including battery]
[H=51.5mm including battery]

Mass (including battery):

DVD-LS80: approximately 1032g

DVD-LS82: approximately 1120g

Mass (without battery): 890g

solder:

This model uses lead free solder (PbF).

Note

Specifications are subject to change without notice.

Mass and dimensions are approximate.

Manufactured under license from Dolby Laboratories. Dolby and the double-D symbol are trademarks of Dolby Laboratories.

"DTS" is a registered trademark of DTS, Inc. and "DTS 2.0" is a trademark of DTS, Inc.

This product incorporates copyright protection technology that is protected by method claims of certain U.S. patents and other intellectual property rights owned by Macrovision Corporation and other rights owners. Use of this copyright protection technology must be authorized by Macrovision Corporation, and is intended for home and other limited viewing uses only unless otherwise authorized by Macrovision Corporation. Reverse engineering or disassembly is prohibited.

This product is licensed under the MPEG-4 Visual patent portfolio license for the personal and non-commercial use of a consumer for (i) encoding video in compliance with the MPEG-4 Visual Standard ("MPEG-4 Video") and/or (ii) decoding MPEG-4 Video that was encoded by a consumer engaged in a personal and non-commercial activity and/or was obtained from a video provider licensed by MPEG LA to provide MPEG-4 Video. No license is granted or shall be implied for any other use. Additional information including that relating to promotional, internal and commercial uses and licensing may be obtained from MPEG LA, LLC.
See http://www.mpegla.com

HighMAT™ and the HighMAT logo are either trademarks or registered trademarks of Microsoft Corporation in the United States and/or other countries.

Windows Media and the Windows logo are trademarks or registered trademarks of Microsoft Corporation in the United States and/or other countries.

This product is protected by certain intellectual property rights of Microsoft Corporation and third parties. Use or distribution of such technology outside of this product is prohibited without a license from Microsoft or an authorized Microsoft subsidiary and third parties.

WMA is a compression format developed by Microsoft Corporation. It achieves the same sound quality as MP3 with a file size that is smaller than that of MP3.

Official DivX® Certified product.
Plays all versions of DivX® video (including DivX® 6) with standard playback of DivX® media files.
DivX, DivX Certified, and associated logos are trademarks of DivX, Inc. and are used under license.

⚠ WARNING

This service information is designed for experienced repair technicians only and is not designed for use by the general public.
It does not contain warnings or cautions to advise non-technical individuals of potential dangers in attempting to service a product.
Products powered by electricity should be serviced or repaired only by experienced professional technicians. Any attempt to service or repair the product or products dealt with in this service information by anyone else could result in serious injury or death.

CONTENTS

Page

1 Important Service Information (EG only) 5
1.1. Notes 5
1.2. About DivX 5
1.3. Manual for Customer 6
2 SAFETY PRECAUTIONS 7
2.1. GENERAL GUIDELINES 7
3 PREVENTION OF ELECTRO STATIC DISCHARGE (ESD) TO ELECTROSTATICALLY SENSITIVE (ES) DEVICES 7
4 PRECAUTION OF LASER DIODE 8
5 HOW TO REPLACE THE LITHIUM BATTERY 9
6 Service caution based on legal restrictions 10
6.1. General description about Lead Free Solder (PbF) 10
7 HANDLING PRECAUTIONS FOR TRAVERSE DECK 11
7.1. Handling of optical pickup 11
7.2. Grounding for electrostatic breakdown prevention 11
8 DISASSEMBLY, REASSEMBLY AND SERVICE POSITION 12
8.1. Disassembly 13
8.2. P.C.B. location 14
8.3. Main cabinet of the unit 14
8.4. Traverse assembly 15
8.5. Optical pick-up unit 16
8.6. Disc motor 16

8.7. Main P.C.B. 17
8.8. Operation P.C.B. 17
8.9. Monitor assembly 17
8.10. Disc cover 18
8.11. Monitor cover 18
8.12. Mono arm 19
8.13. Inverter P.C.B. 20
8.14. LCD panel 20
8.15. Replacing the fuse in the car dc adaptor 20
8.16. Service position 21
9 SELF-DIAGNOSIS FUNCTION AND SERVICE MODE (DVD-LS82EG) 22
9.1. Optical Pickup Breakdown Diagnosis 22
9.2. UHF displays 23
9.3. Service Mode Table 1 24
9.4. DVD Self Diagnostic Function-Error Code 24
9.5. Last Error Code saved during NO PLAY 26
9.6. Service mode table 26
9.7. Lens cleaning 28
10 SELF-DIAGNOSIS FUNCTION AND SERVICE MODE (Except for DVD-LS82EG) 29
10.1. Optical Pickup Breakdown Diagnosis 29
10.2. UHF displays 30
10.3. Service Mode Table 1 31
10.4. DVD Self Diagnostic Function-Error Code 31
10.5. Last Error Code saved during NO PLAY 32
10.6. Service mode table 33
10.7. Lens cleaning 33
11 SERVICE PRECAUTIONS 34
11.1. Recovery after the dvd player is repaired 34
11.2. Firmware version-up of the DVD player 34
12 ADJUSTMENT PROCEDURES 35
12.1. Service Tools and Equipment 35
12.2. Important points in adjustment 35
12.3. Storing and Handling Test Discs 35
12.4. Optical adjustment 35
12.5. Electrical adjustment (LCD) 38
12.6. Electrical check (Video output check) 39
13 Abbreviations 40
14 VOLTAGE CHART 42
14.1. MAIN P.C.B. 42
15 BLOCK DIAGRAM 45
15.1. OVERALL BLOCK DIAGRAM 45
15.2. POWER SUPPLY BLOCK DIAGRAM 46
15.3. SERVO BLOCK DIAGRAM 47
15.4. AUDIO BLOCK DIAGRAM 48
15.5. VIDEO BLOCK DIAGRAM 49
16 INTERCONNECTION SCHEMATIC DIAGRAM & SCHEMATIC DIAGRAM NOTES 51
16.1. INTERCONNECTION SCHEMATIC DIAGRAM 51
16.2. SCHEMATIC DIAGRAM NOTES 52
17 SCHEMATIC DIAGRAM 53
17.1. CHARGE BATTERY SECTION (MAIN P.C.B. (1/9)) SCHEMATIC DIAGRAM 53
17.2. POWER SUPPLY SECTION (MAIN P.C.B. (2/9)) SCHEMATIC DIAGRAM 54
17.3. OPTICAL PICK UP/SERVO SECTION (MAIN P.C.B. (3/9)) SCHEMATIC DIAGRAM 55
17.4. DV5 SECTION (MAIN P.C.B. (4/9)) SCHEMATIC DIAGRAM 56
17.5. VIDEO OUT SECTION (MAIN P.C.B. (5/9)) SCHEMATIC DIAGRAM 57
17.6. AUDIO OUT SECTION (MAIN P.C.B. (6/9)) SCHEMATIC DIAGRAM 58
17.7. OPERATION SECTION (MAIN P.C.B. (7/9)) SCHEMATIC DIAGRAM 59
17.8. LCD IF SECTION (MAIN P.C.B. (8/9)) SCHEMATIC DIAGRAM 60
17.9. CN SECTION (MAIN P.C.B. (9/9)) SCHEMATIC DIAGRAM 61
17.10. OPERATION SECTION (OPERATION P.C.B.) SCHEMATIC DIAGRAM 62
18 CIRCUIT BOARD ASSEMBLY 63
18.1. MAIN P.C.B. (1/2) (COMPONENT SIDE) 63
18.2. MAIN P.C.B. (2/2) (FOIL SIDE) 64
18.3. OPERATION P.C.B. 65
19 EXPLODED VIEWS 67
19.1. Casing Parts & Mechanism Section Exploded View 67
19.2. Mechanism Section Exploded View 68
19.3. Packing & Accessories Exploded View 69
20 REPLACEMENT PARTS LIST 70
21 Schematic Diagram for printing with A4 78

1 Important Service Information (EG only)

1.1. Notes

When you replace EEPROM or exchange MAIN P.C.B., you have to take “Manual for customer” to the customer with unit (also in the case of unit exchanges.).

Please take and use “Manual for customer” from below.

1. Come with MAIN P.C.B. or EEPROM (Service part).
2. Make a photocopy section 1.3 “Manual for customer” on this Service Manual.

“Manual for customer” has important information for “DivX Video-on-Demand Service” user.

Please don’t forget take it to the customer with unit!

1.2. About DivX

1.2.1. DivX

A video compression format developed by DivXNetworks, Inc. that compresses video files without any considerable loss of video quality.

1.2.2. About DivX Video-on-Demand Content

DivX Video-on-Demand (VOD) content is encrypted for copyright protection. In order to play DivX VOD content on this unit, you first need to register the unit.

Follow the on line instructions for purchasing DivX VOD content to enter the unit’s registration code and register the unit. For more information about DivX VOD, visit www.divx.com/vod.

Display the unit’s registration code

8 alphanumeric characters

- We recommend that you make a note of this code for future reference.
- After playing DivX VOD content for the first time, another registration code is then displayed in “DivX Registration”. Do not use this registration code to purchase DivX VOD content. If you use this code to purchase DivX VOD content, and then play the content on this unit, you will no longer be able to play any content that you purchased using the previous code.
- If you purchase DivX VOD content using a registration code different from this unit’s code, you will not be able to play this content. (“Authorization Error” is displayed.)

Regarding DivX content that can only be played a set number of times

Some DivX VOD content can only be played a set number of times. When you play this content, the remaining number of plays is displayed. You cannot play this content when the number of remaining plays is zero. (“Rented Movie Expired” is displayed.)

When playing this content

- The number of remaining plays is reduced by one if
  –you turn off the unit or display “Setup” menu.
  –you press **[■, –OFF]**. (Press **[❚❚]** to stop play.)
  –you press **[|◀◀ ▶▶|]** (Skip or search) etc. and arrive at another content or the start of the content being played.
- Resume play does not work.

1.3. Manual for Customer

Warning for Customers Who Use the DivX Video-on-Demand content.

1. The registration code has been changed for the repair of the product or the product exchange.

2. Obtain and register a new registration code, otherwise you will no longer be able to play DivX Video-on-Demand content.

3. Follow the procedure on the DivX Video-on-Demand web site to register at http://vod.divx.com/.

* If you do not use the DivX Video-on-Demand content, please ignore this warning.

2 SAFETY PRECAUTIONS

2.1. GENERAL GUIDELINES

1. When servicing, observe the original lead dress. If a short circuit is found, replace all parts which have been overheated or damaged by the short circuit.
2. After servicing, see to it that all the protective devices such as insulation barriers, insulation papers shields are properly installed.
3. After servicing, make the following leakage current checks to prevent the customer from being exposed to shock hazards.

2.1.1. LEAKAGE CURRENT COLD CHECK

1. Unplug the AC cord and connect a jumper between the two prongs on the plug.
2. Measure the resistance value, with an ohmmeter, between the jumpered AC plug and each exposed metallic cabinet part on the equipment such as screwheads, connectors, control shafts, etc. When the exposed metallic part has a return path to the chassis, the reading should be between 1MΩ and 5.2MΩ.
   When the exposed metal does not have a return path to the chassis, the reading must be ∞.

2.1.2. LEAKAGE CURRENT HOT CHECK

1. Plug the AC cord directly into the AC outlet. Do not use an isolation transformer for this check.
2. Connect a 1.5kΩ, 10 watts resistor, in parallel with a 0.15µF capacitors, between each exposed metallic part on the set and a good earth ground such as a water pipe.

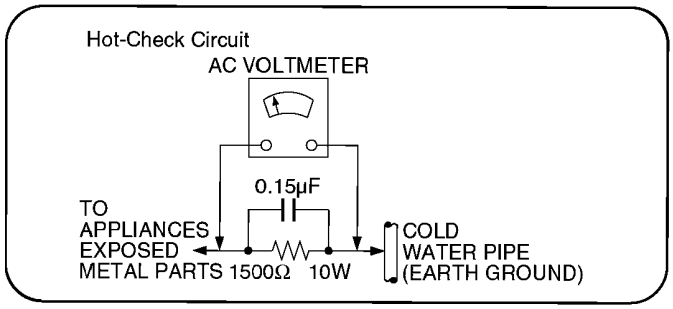

3. Use an AC voltmeter, with 1000 ohms/volt or more sensitivity, to measure the potential across the resistor.
4. Check each exposed metallic part, and measure the voltage at each point.
5. Reverse the AC plug in the AC outlet and repeat each of the above measurements.
6. The potential at any point should not exceed 0.75 volts RMS. A leakage current tester (Simpson Model 229 or equivalent) may be used to make the hot checks, leakage current must not exceed 1/2 milliamp. In case a measurement is outside of the limits specified, there is a possibility of a shock hazard, and the equipment should be repaired and rechecked before it is returned to the customer.

3 PREVENTION OF ELECTRO STATIC DISCHARGE (ESD) TO ELECTROSTATICALLY SENSITIVE (ES) DEVICES

Some semiconductor (solid state) devices can be damaged easily by static electricity. Such components commonly are called Electrostatically Sensitive (ES) Devices. Examples of typical ES devices are integrated circuits and some field-effect transistors and semiconductor "chip" components. The following techniques should be used to help reduce the incidence of component damage caused by electro static discharge (ESD).

1. Immediately before handling any semiconductor component or semiconductor-equipped assembly, drain off any ESD on your body by touching a known earth ground. Alternatively, obtain and wear a commercially available discharging ESD wrist strap, which should be removed for potential shock reasons prior to applying power to the unit under test.
2. After removing an electrical assembly equipped with ES devices, place the assembly on a conductive surface such as alminum foil, to prevent electrostatic charge buildup or exposure of the assembly.
3. Use only a grounded-tip soldering iron to solder or unsolder ES devices.
4. Use only an anti-static solder removal device. Some solder removal devices not classified as "anti-static (ESD protected)" can generate electrical charge sufficient to damage ES devices.
5. Do not use freon-propelled chemicals. These can generate electrical charges sufficient to damage ES devices.
6. Do not remove a replacement ES device from its protective package until immediately before you are ready to install it. (Most replacement ES devices are packaged with leads electrically shorted together by conductive foam, alminum foil or comparable conductive material).
7. Immediately before removing the protective material from the leads of a replacement ES device, touch the protective material to the chassis or circuit assembly into which the device will be installed.

   Caution

   Be sure no power is applied to the chassis or circuit, and observe all other safety precautions.

8. Minimize bodily motions when handling unpackaged replacement ES devices. (Otherwise hamless motion such as the brushing together of your clothes fabric or the lifting of your foot from a carpeted floor can generate static electricity (ESD) sufficient to damage an ES device).

4 PRECAUTION OF LASER DIODE

CAUTION:

This product utilizes a laser diode with the unit turned "on", invisible laser radiation is emitted from the pickup lens.
Wave length:662nm/785nm
Maximum output radiation power from pickup: 100 μ W/VDE
Laser radiation from the pickup lens is safety level,but be sure the followings:

1. Do not disassemble the optical pickup unit, since radiation from exposed laser diode is dangerous.
2. Do not adjust the variable resistor on the pickup unit. It was already adjusted.
3. Do not look at the focus lens using optical instruments.
4. Recommend not to look at pickup lens for a long time.

ACHTUNG:

Dieses Produkt enthlt eine Laserdiode.
Im eingeschalteten Zustand wird unsichtbare Leserstrahlung von der Laserinheit adgestrahit.
WellenInge: 658nm/790nm
Maximale Strahlungsleistung der Lasereinheit: 100 μ W/VDE
Die Strahlungan der Lasereinheit ungefhrlich, wenn folgende Punkte beachtet werden:

1. Die Lasereinheit nicht zerlegen, da die Strahlung an der freigelegten Laserdiode gefhrlich ist.
2. Den werkseitig justierten Einstellregler der Lasereinhit nicht verstellen.
3. Nicht mit optischen Instrumenten in die Fokussierlines blicken.
4. Nicht ber Ingere Zeit in die Fokussierlines blicken.

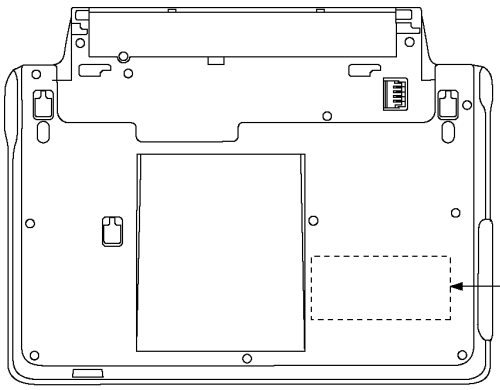

CAUTION- LASER RADIATION WHEN OPEN AND INTERLOCK DEFEATED. DO NOT STARE INTO BEAM. FDA 21 CFR / Class II
CAUTION- CLASS 1M VISIBLE AND INVISIBLE LASER RADIATION WHEN OPEN AND INTERLOCKS DEFEATED. DO NOT VIEW DIRECTLY WITH OPTICAL INSTRUMENTS.
IEC60825-1 +A2/ Class 1M
ATTENTION- RAYONNEMENT LASER VISIBLE ET INVISIBLE, CLASSE 1M, EN CAS D'OUVERTURE ET LORSQUE LA SÉCURITÉ EST NEUTRALISÉE. NE PAS REGARDER DIRECTEMENT À L'AIDE D'INSTRUMENTS D'OPTIQUE.

CAUTION!
THIS PRODUCT UTILIZES A LASER.
USE OF CONTROLS OR ADJUSTMENTS OR PERFORMANCE OF PROCEDURES OTHER THAN THOSE SPECIFIED HEREIN MAY RESULT IN HAZARDOUS RADIATION EXPOSURE.

5 HOW TO REPLACE THE LITHIUM BATTERY

This model is using a lithium battery for the remote control ass'y.

NOTE:

The lithium battery is a critical component. (Type No.: CR2025 Manufactured by Panasonic.)

It must never be subjected to excessive heat or discharge.

It must therefore only be fitted in equipment designed specifically for its use.

Replacement batteries must be of the same type and manufacture.

They must be fitted in the same manner and location as the original battery, with the correct polarity contacts observed.

Do not attempt to re-charge the old battery or re-use it for any other purpose.

It should be disposed of in waste products destined for burial rather than incineration.

(For English)

CAUTION

Danger of explosion if battery is incorrectly replaced.
Replace only with the same or equivalent type recommended by the equipment manufacturer.
Discard used batteries according to manufacturer's instructions.

(For French)

PRECAUTION

Le fait de remplacer incorrectement la pile peut présenter des risques d'explosion.
Remplacer la pile uniquement par une pile identique ou de type équivalent recommandée par le fabricant. Se débarrasser des piles usagées conformément aux instructions du fabricant.

(For German)

VORSICHT

Bei einer falsch eingesetzten Batterie besteht Explosionsgefahr. Nur mit einer vom gleichen Typ ersetzen.
Verbrauchte Batterien beim Fachhändler oder einer Sammelstelle für Sonderstoffe abliefern.

(For Swedish)

VARNING

Explosionsfara vid felaktigt batteribyte.
Använd samma batterityp eller en ekvivalent typ som rekommenderas av apparattillverkaren.
Kassera använt batteri enligt fabrikantens instruktion.

(For Norwegian)

ADVARSEL!

Lithiumbatteri-Eksplosionsfare ved fejlagtig håndtering.
Udskiftning må kun ske med batteri af samme fabrikat og type.
Levér det brugte batteri tilbage til leverandøren.

(For Finnish)

VAROITUS

Paristo voi räjähtää, jos se on virheellisesti asennettu.
Vaihda paristo ainoastaan laitevalmistajan suosittelemaan tyyppiin.
Hävitä käytetty paristo valmistajan ohjeiden mukaisesti.

6 Service caution based on legal restrictions

6.1. General description about Lead Free Solder (PbF)

The lead free solder has been used in the mounting process of all electrical components on the printed circuit boards used for this equipment in considering the globally environmental conservation.

The normal solder is the alloy of tin (Sn) and lead (Pb). On the other hand, the lead free solder is the alloy mainly consists of tin (Sn), silver (Ag) and Copper (Cu), and the melting point of the lead free solder is higher approx.30 degrees C (86 F) more than that of the normal solder.

Definition of PCB Lead Free Solder being used

The letter of “PbF” is printed either foil side or components side on the PCB using the lead free solder. (See right figure)	PbF

Service caution for repair work using Lead Free Solder (PbF)

- The lead free solder has to be used when repairing the equipment for which the lead free solder is used.(Definition: The letter of "PbF" is printed on the PCB using the lead free solder.)
- To put lead free solder, it should be well molten and mixed with the original lead free solder.
- Remove the remaining lead free solder on the PCB cleanly for soldering of the new IC.
- Since the melting point of the lead free solder is higher than that of the normal lead solder, it takes the longer time to melt the lead free solder.
- Use the soldering iron (more than 70W) equipped with the temperature control after setting the temperature at 350+-30 degrees C (662+-86 F).

Recommended Lead Free Solder (Service Parts Route.)

- The following 3 types of lead free solder are available through the service parts route.

RFKZ03D01K----------(0.3mm 100g Reel)

RFKZ06D01K----------(0.6mm 100g Reel)

RFKZ10D01K----------(1.0mm 100g Reel)

Note

* Ingredient: tin (Sn) 96.5%, silver (Ag) 3.0%, Copper (Cu) 0.5%, Cobalt (Co) / Germanium (Ge) 0.1 to 0.3%

7 HANDLING PRECAUTIONS FOR TRAVERSE DECK

The laser diode in the optical pickup may break down due to potential difference caused by static electricity of clothes or human body.

So be careful of electrostatic break down during repair of the optical pickup.

7.1. Handling of optical pickup

1. Do not subject the optical pickup to static electricity as it is extremely sensitive to electrical shock.
2. To prevent the breakdown of the laser diode, an antistatic shorting pin is inserted into the flexible board (FPC Board). When removing or connecting the short pin, finish the job in as short times as possible.
3. Be careful not to apply excessive stress to the flexible board (FPC Board).
4. Do not turn the variable resistor (Laser power adjustment). It has already been adjusted.

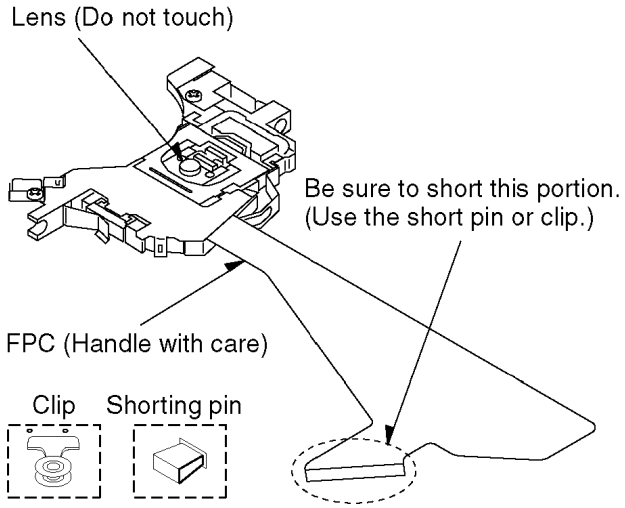

7.2. Grounding for electrostatic breakdown prevention

1. Human body grounding
   Use the antistatic wrist strap to discharge the static electricity from your body.
2. Work table grounding
   Put a conductive material (sheet) or steel sheet on the area where the optical pickup is placed and ground the sheet.

   Caution

   The static electricity of your clothes will not be grounded through the wrist strap. So take care not to let your clothes touch the optical pickup.

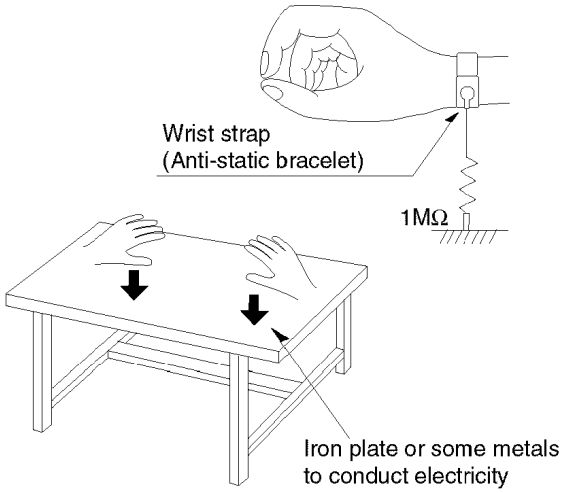

8 DISASSEMBLY, REASSEMBLY AND SERVICE POSITION

Before trying to disassembling, reassembling or replacing parts, make sure the DC receptacle is disconnected; otherwise there is a danger of causing an electrical shock accident or injury.

The laser does not come on when the inner cover is opened.
If the objective lens of the optical pick-up shines in red when the inner cover is opened, turn off the power immediately and check.

If you need to turn on the laser for any reason, such as playback inspection, never look directly at the laser light.

When disassembly of the unit is needed, remove the disk from the unit.
Use caution not to give damage to the LCD surface.

8.1. Disassembly

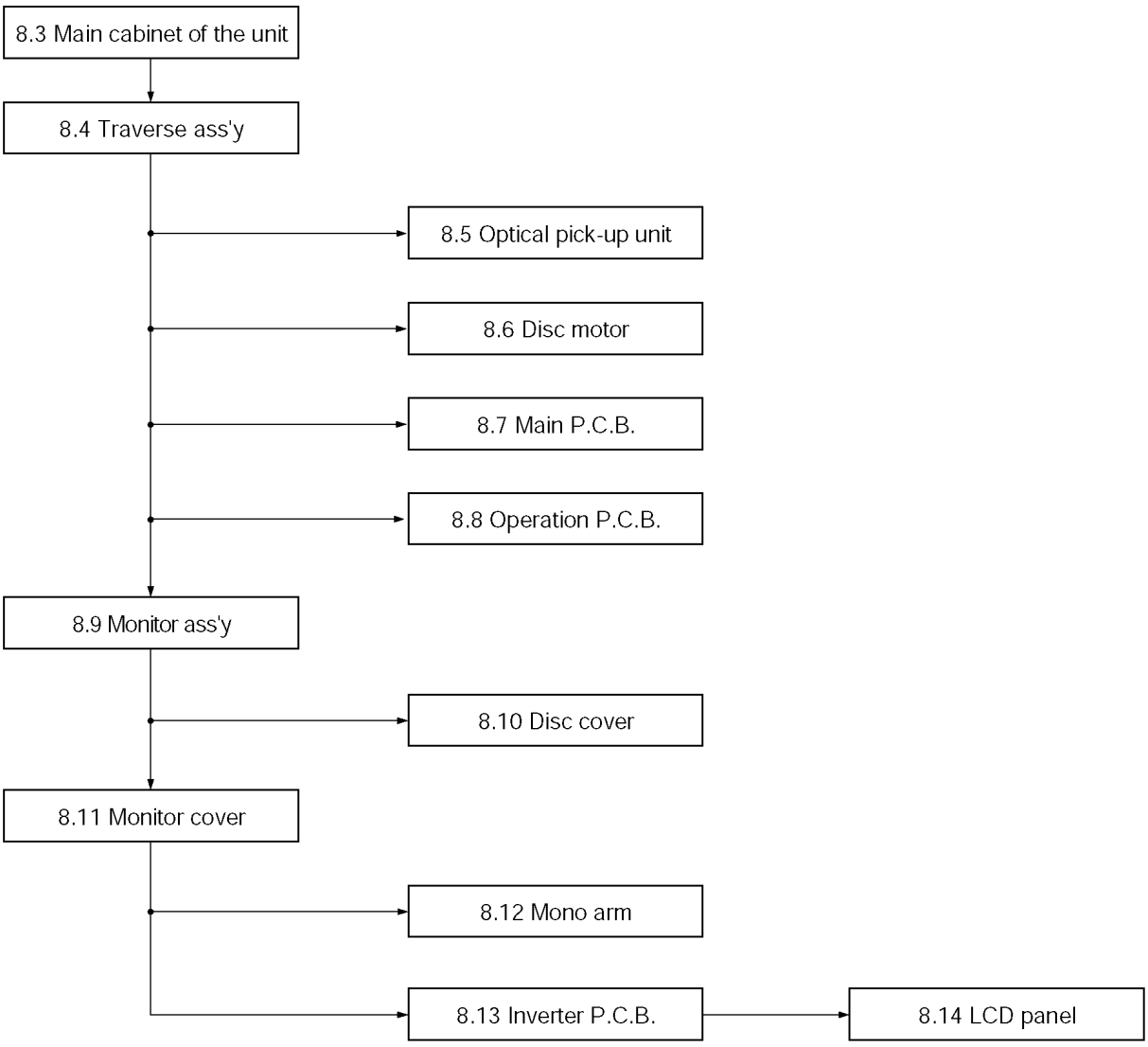

<Caution to be taken when disassembling and reassembling the unit>

- Disconnect the flexible cable from the main P.C.B before disassembling the monitor assembly.
- Do not apply undue force on the flexible cable. There is a danger of breaking the cable.
- Do not touch the terminals of the flexible cable with your bare hands.
- Disassembly and reassembly should be performed in the specified order.
- Hold the LCD panel by its edges. ・ Do not press the LCD panel strongly.

∗ If the LCD panel was pressed strongly by chance during disassembly or reassembly, leave it for about 10 seconds before energizing the panel.

- To clean the LCD panel, wipe with a soft cloth, such as gauze, saturated with isopropyl alcohol.
  - ∗ Do not wipe the LCD panel with a dry gauze.
  - ∗ Never use water for cleaning the LCD panel.
  - ∗ Never use the following solvents:

  (ketone: acetone and others)
  (aromatic compounds: xylene, toluene)
  (halogenides)
  - ∗ If the water splashes on the LCD panel, wipe it away immediately.

8.2. P.C.B. location

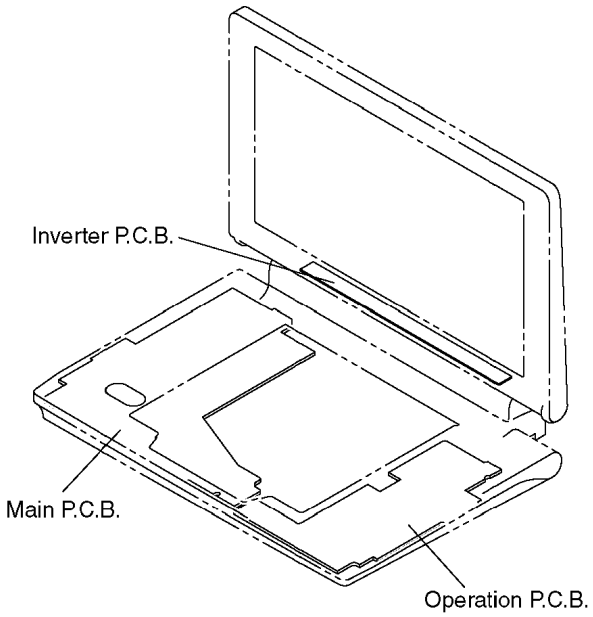

8.3. Main cabinet of the unit

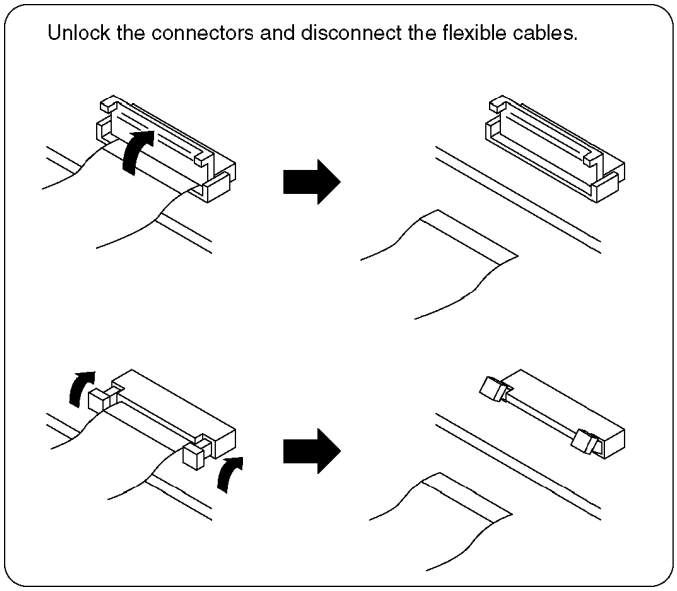

<Removing battery pack>

Release the lock lever and remove the battery pack in the direction of the arrow.

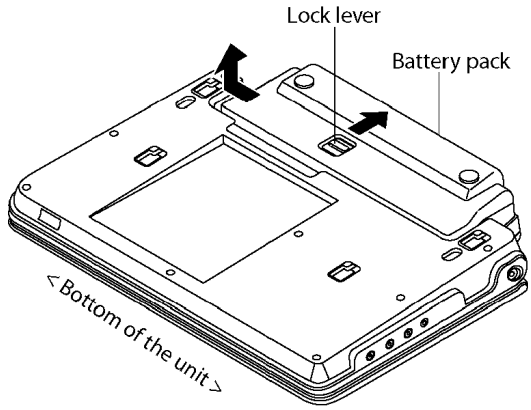

1. Remove the 13 screws from the bottom of the unit.

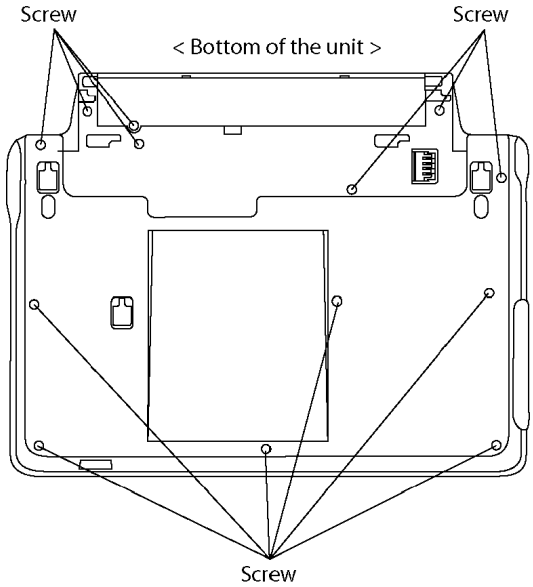

2. Release the latches and remove the bottom cabinet.

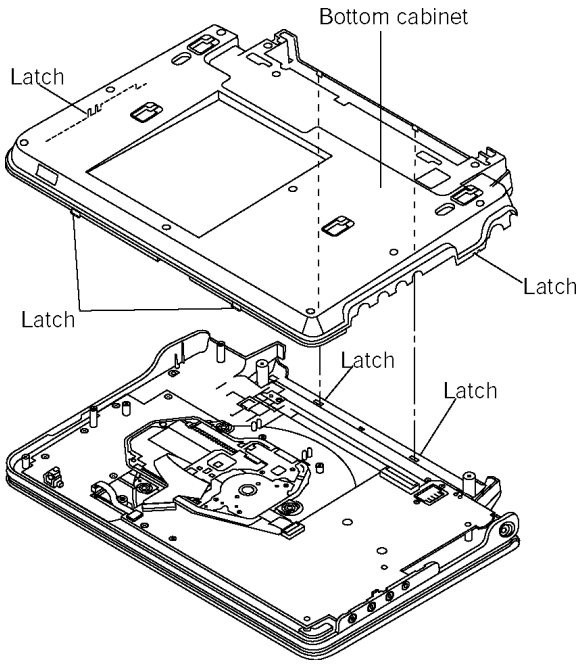

8.4. Traverse assembly

⚠ Take antistatic measures before servicing the traverse unit and its related devices.

8.4.1. Removing traverse assembly

1. Solder the 2 laser short lands on the flexible cable.
2. Unlock the connectors and remove the flexible cables.

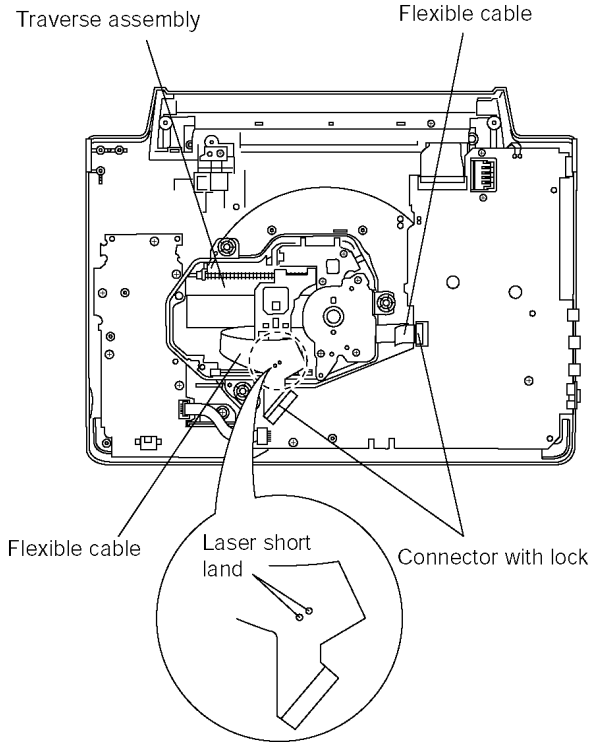

8.4.2. Reinstalling traverse assembly

1. Reinstall the traverse assembly to the specified pin of the unit.
2. Reinstall the flexible cable of the optical pickpup unit and lock it securely.
3. Remove the solder of each laser short land of the flexible cable.

   Caution:

   Remove the solders completely: otherwise the laser diode won't emit light.

4. Reinstall the spindle flexible cable as shown figure.

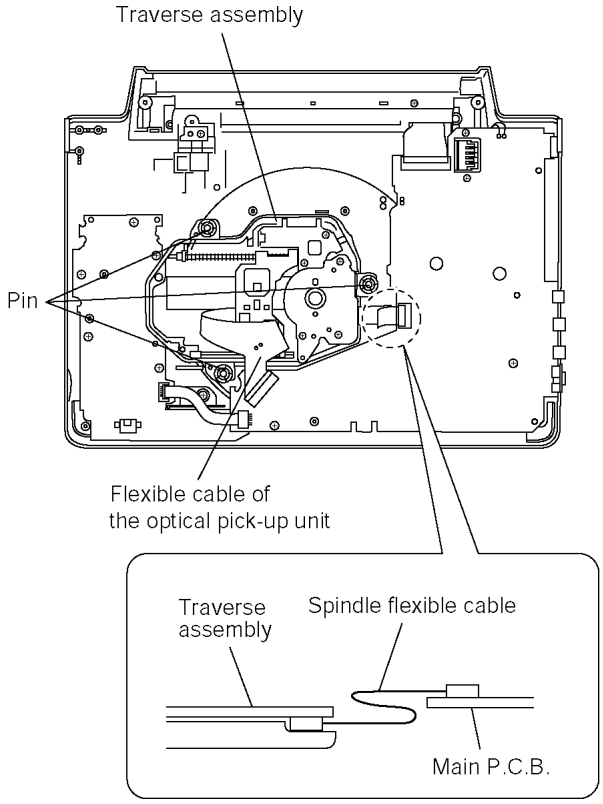

8.5. Optical pick-up unit

8.5.1. Removing optical pick-up unit

Caution to be taken when replacing optical pick-up unit.

1. Take antistatic measures before servicing the optical pick-up unit.
2. Use a clean work bench which is free from dust or foreign matter.
3. Do not replace optical pick-ups other than necessary; otherwise they might not be properly adjusted.
4. When disassembling the traverse unit, use caution not to lose small parts such as screws and springs.

The traverse unit is a precision optical part. Do not touch the lens or give shock to the traverse.

Make sure that the traverse assembly removed before trying to remove the optical pick-up unit.

When removing the traverse assembly, solder the two laser short lands on the flexible cable of the optical pick-up unit.

1. Remove the two screws securing the main shaft retainer.
2. Remove the main shaft retainer.
3. Slide the main shaft in the direction indicated by the arrow to remove the optical pick-up unit.

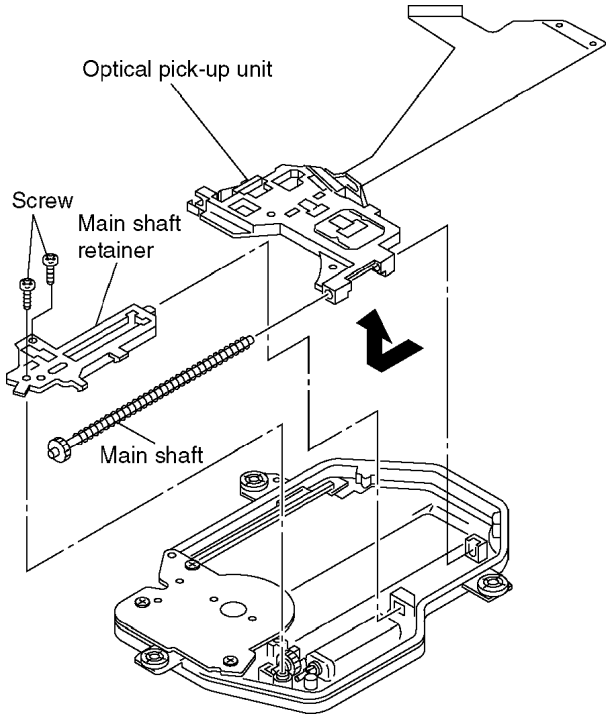

8.5.2. Reinstalling optical pick-up unit

The optical pick-up unit is factory adjusted. Do not touch the adjustment screw.

1. Reassemble the disassembled parts in the reverse order of disassembly.
2. When reinstalling the traverse assembly on the main unit after installing the optical pick-up unit, make sure to remove the solder from each of the two laser short lands on the flexible cable.

Caution:

- Remove the solders completely; otherwise the laser diode won´t emit light.
- After replacing the optical pick-up unit, check the quality of images played back and make optical adjustment.

8.6. Disc motor

8.6.1. Removing disc motor

1. Remove the adjustment screws A, B, and C.
2. Remove the disc motor.

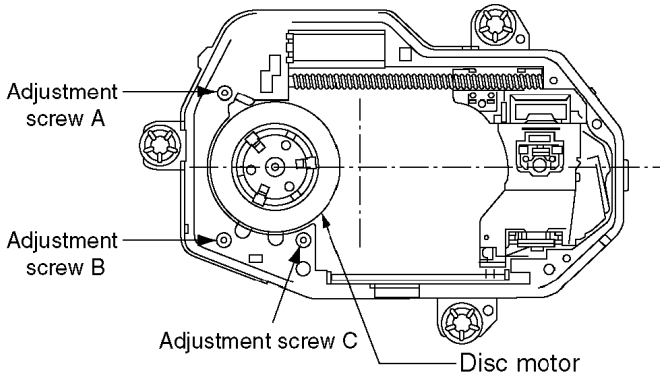

8.6.2. Caution to be taken when replacing the disc motor

1. The mounting screws of the disc motor also serve as adjustment screws. When reinstalling the disc motor, first turn the screws A, B, and C as far as they go by usual force to secure them (do not overtighten).
2. Back off the adjustment screws A and C two complete turns and secure them.
3. Back off the adjustment screw B one and a half turns and secure them.
   - This makes it nearly possible to play back disks and adjust the jitter.

     Thereafter, adjust the adjustment screws C and A as indicated.

8.7. Main P.C.B.

1. Unlock the connector and remove the flexible cable.
2. Remove the connector.
3. Remove the 3 screws and remove the main P.C.B..

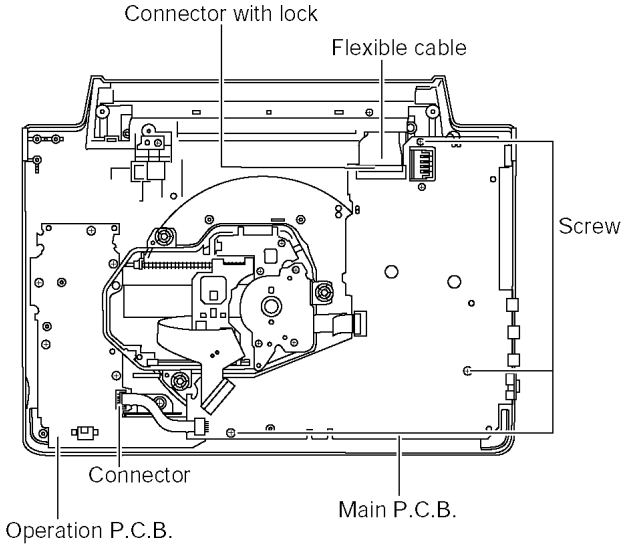

8.8. Operation P.C.B.

1. Remove the connector.
2. Remove the 6 screws and remove the operation P.C.B.

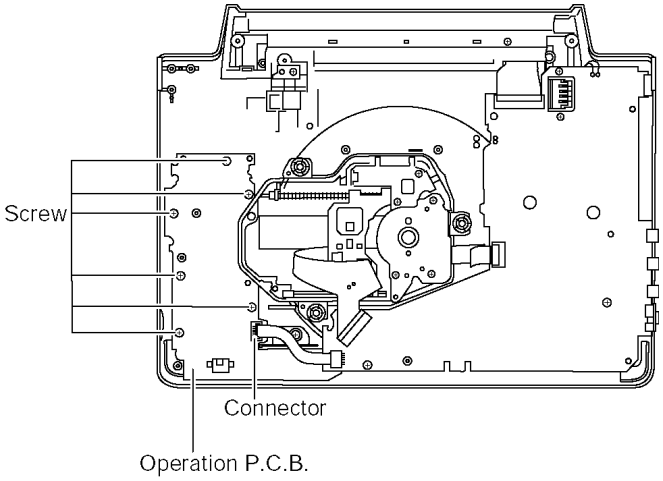

8.9. Monitor assembly

Take care not to get an electrical shock accident by touching the high-voltage part when checking for conduction after disassembly.
Do not give damage to the LCD surface.

1. Unlock the connector and remove the flexible cable.
2. Remove the 3 screws.

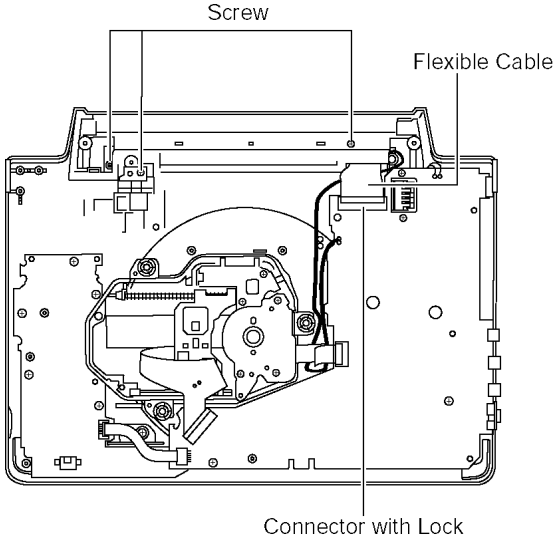

3. Release the latches and remove the hinge cover.
4. Remove the screw and remove the monitor assembly.

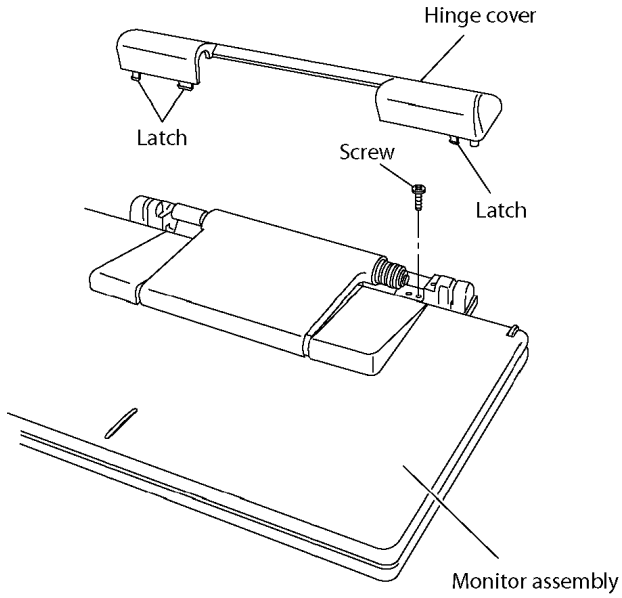

<Caution to be taken when installing monitor assembly>

1. Roll the flexible cable as shown figure.
2. Install the monitor assembly on the cabinet.

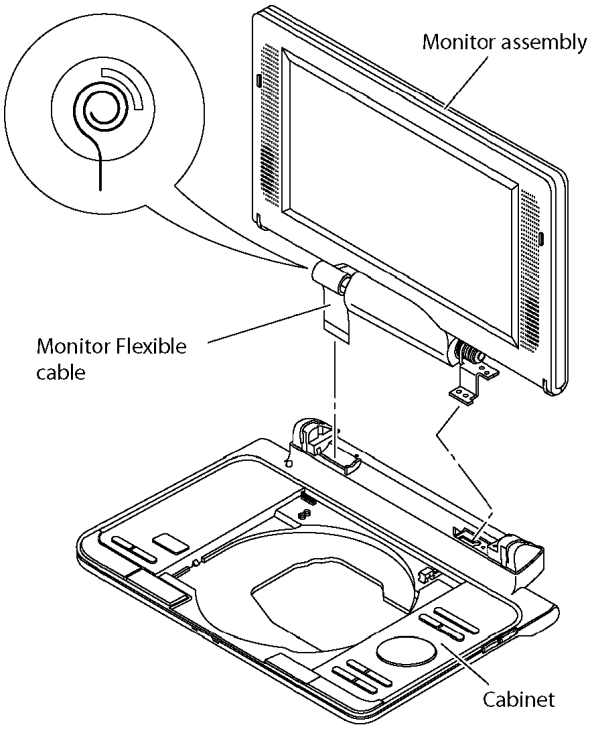

8.10. Disc cover

1. Remove the disc cover in order of (a) and (b).

Caution:

Please don't lose the spring

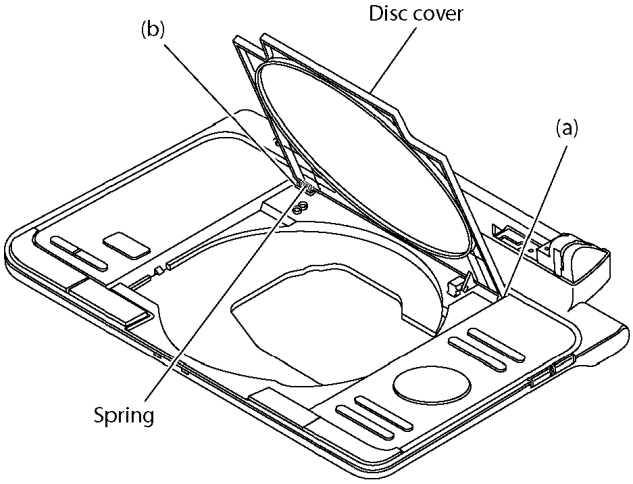

8.11. Monitor cover

1. Remove the 5 screws
2. Remove the monitor cover into the direction of the arrow.

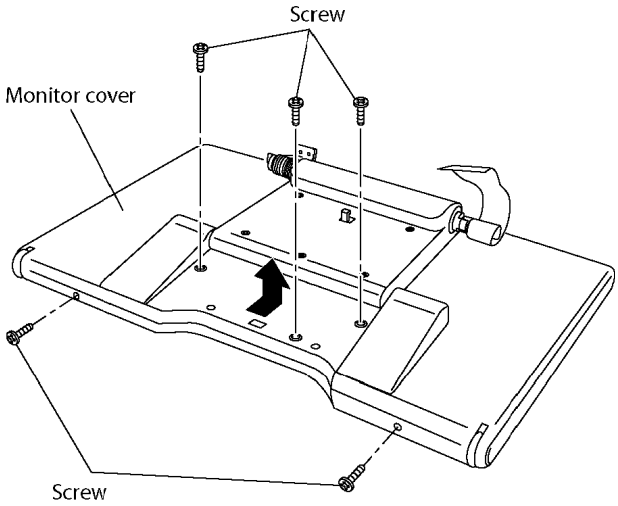

3. Unlock the connector and remove the flexible cable.

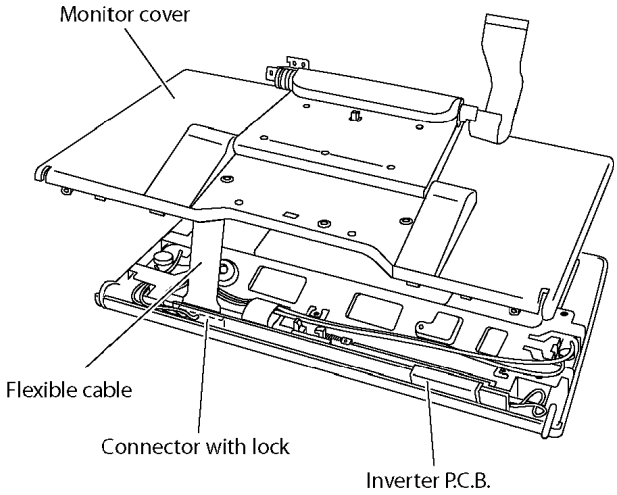

<Caution to be taken when installing monitor cover>

Please do not nip the wire.

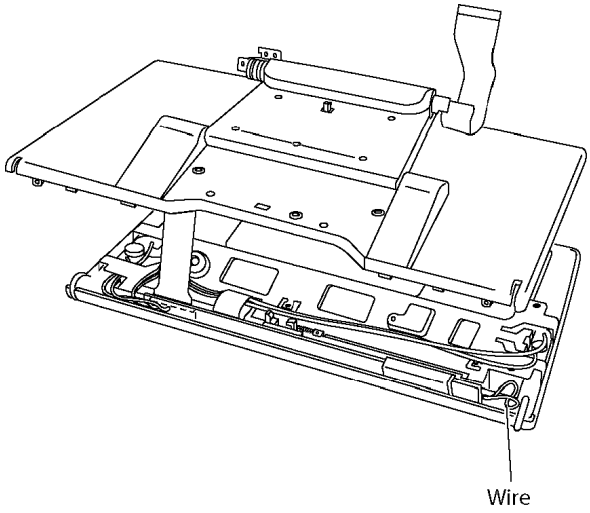

8.12. Mono arm

1. Remove the 2 screws.
2. Release the latches and remove the shaft covers.
3. Release the friction hinge from boss and remove the mono arm assembly.

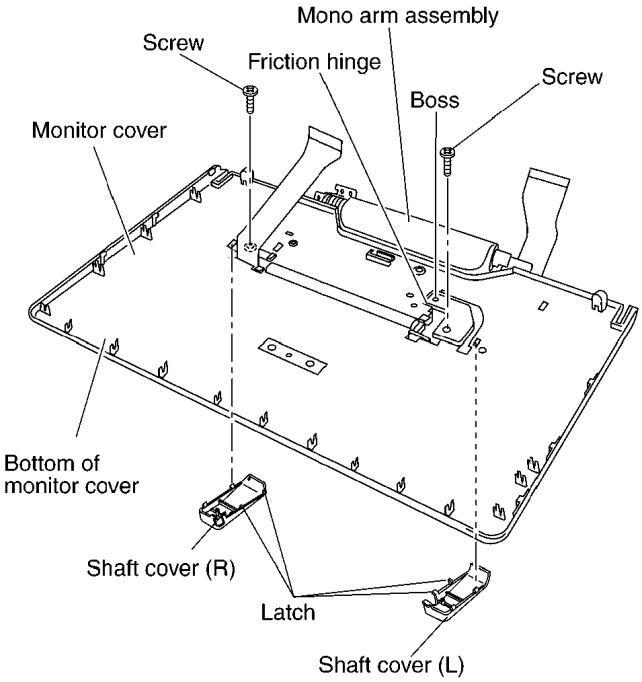

4. Remove the 5 screws.

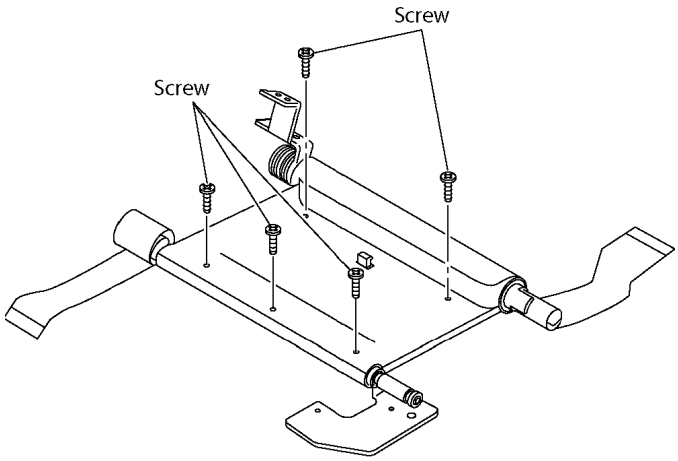

5. Release the latches and remove the mono arm cover

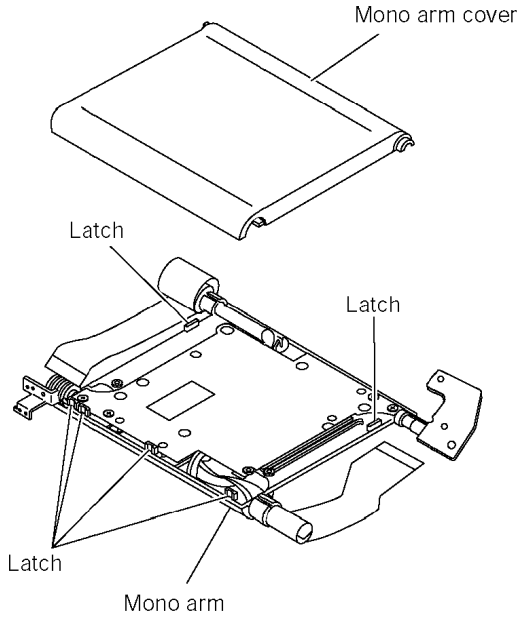

6. Remove the plate and friction hinge (A)/(B).

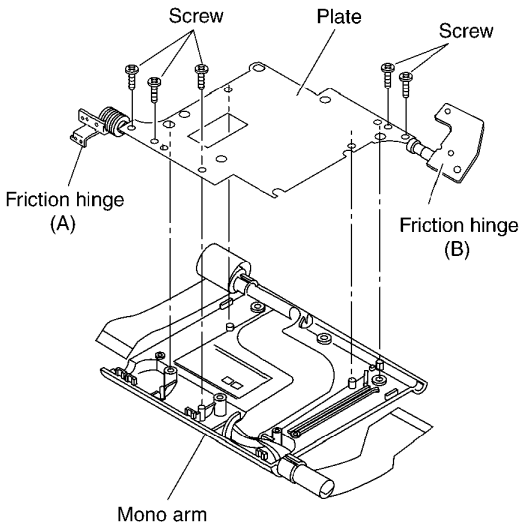

<Caution to be taken when installing mono arm>

1. Roll the flexible cables as shown figure and install it to mono arm cover.

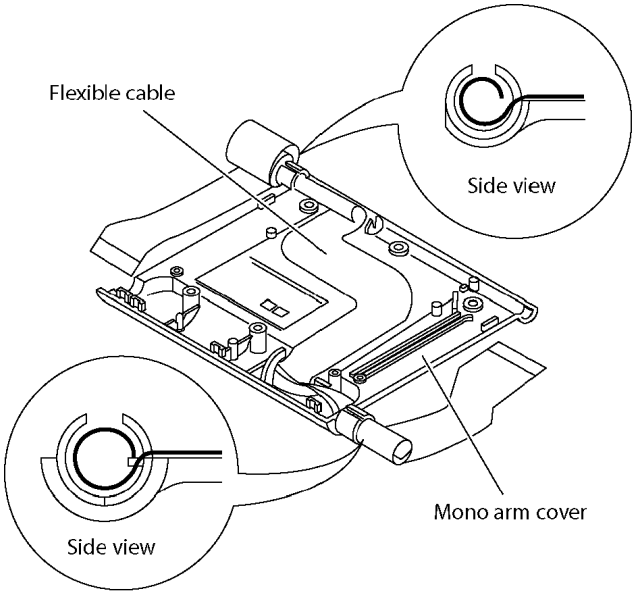

2. Install mono arm.
3. Roll 3 turns of the flexible cable and Install the shaft cover (R) to flexible cable.
4. Pass the flexible cable and the friction hinge into the holes in the monitor cover.
5. Install the shaft covers to monitor cover.

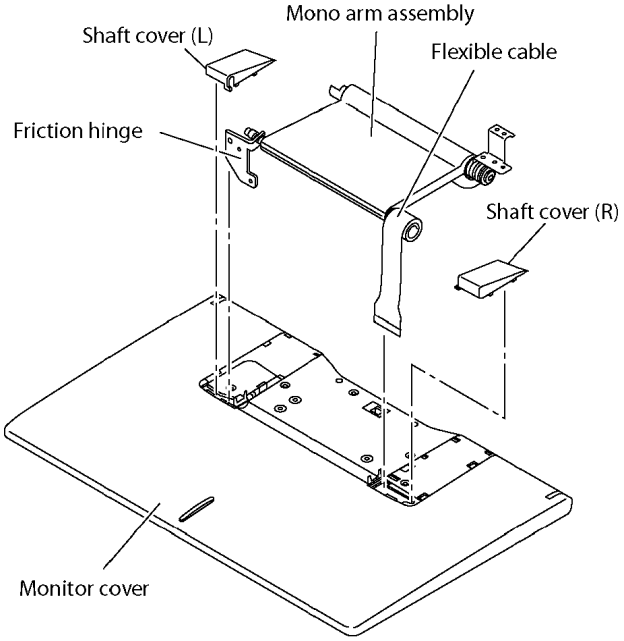

8.13. Inverter P.C.B.

1. Unlock the connector and remove the flexible cable.
2. Remove the 4 screws.
3. Remove the monitor support angle.
4. Remove the connector and remove the inverter P.C.B. and 2 speaker.

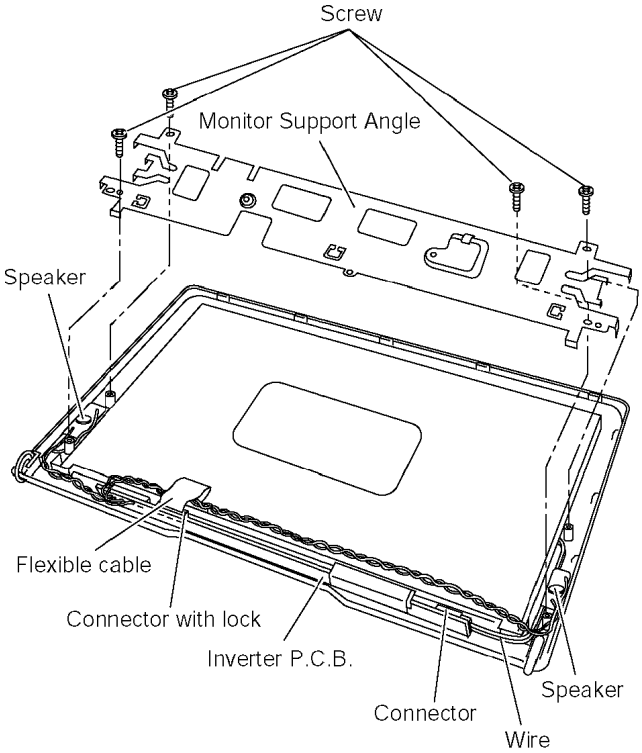

8.14. LCD panel

1. Remove the LCD panel into the direction of the arrow.

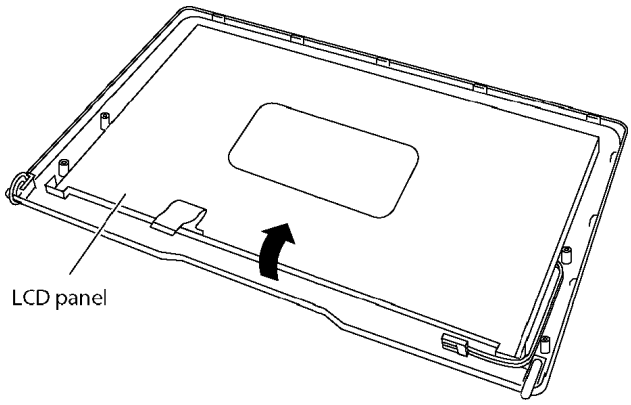

8.15. Replacing the fuse in the car dc adaptor

- Replace only with the specified 125V/250V, 3A fuse. Use of any other type can cause fire.

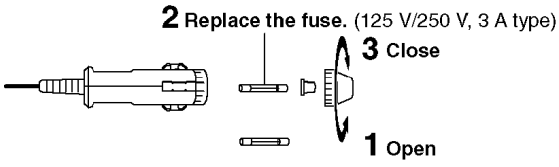

8.16. Service position

If you need to turn on the laser for any reason, such as for playback inspection, never look directly at the laser light.

8.16.1. Board checks

1. Connect the main P.C.B and the traverse assembly with an extension cable.
2. Install the traverse assembly to the tilt adjustment jig using three screws and three washers.

   Caution:

   - Remove the rubber cushion from the traverse assembly to prevent it from getting damaged.
3. Install a dick on the traverse assembly.

   Caution:

   - Make sure the disk is securely installed on the disk motor.
4. Remove the main P.C.B., operation P.C.B., inverter P.C.B., and LCD panel as shown below.
5. The disk cannot be played back with the disk cover removed.

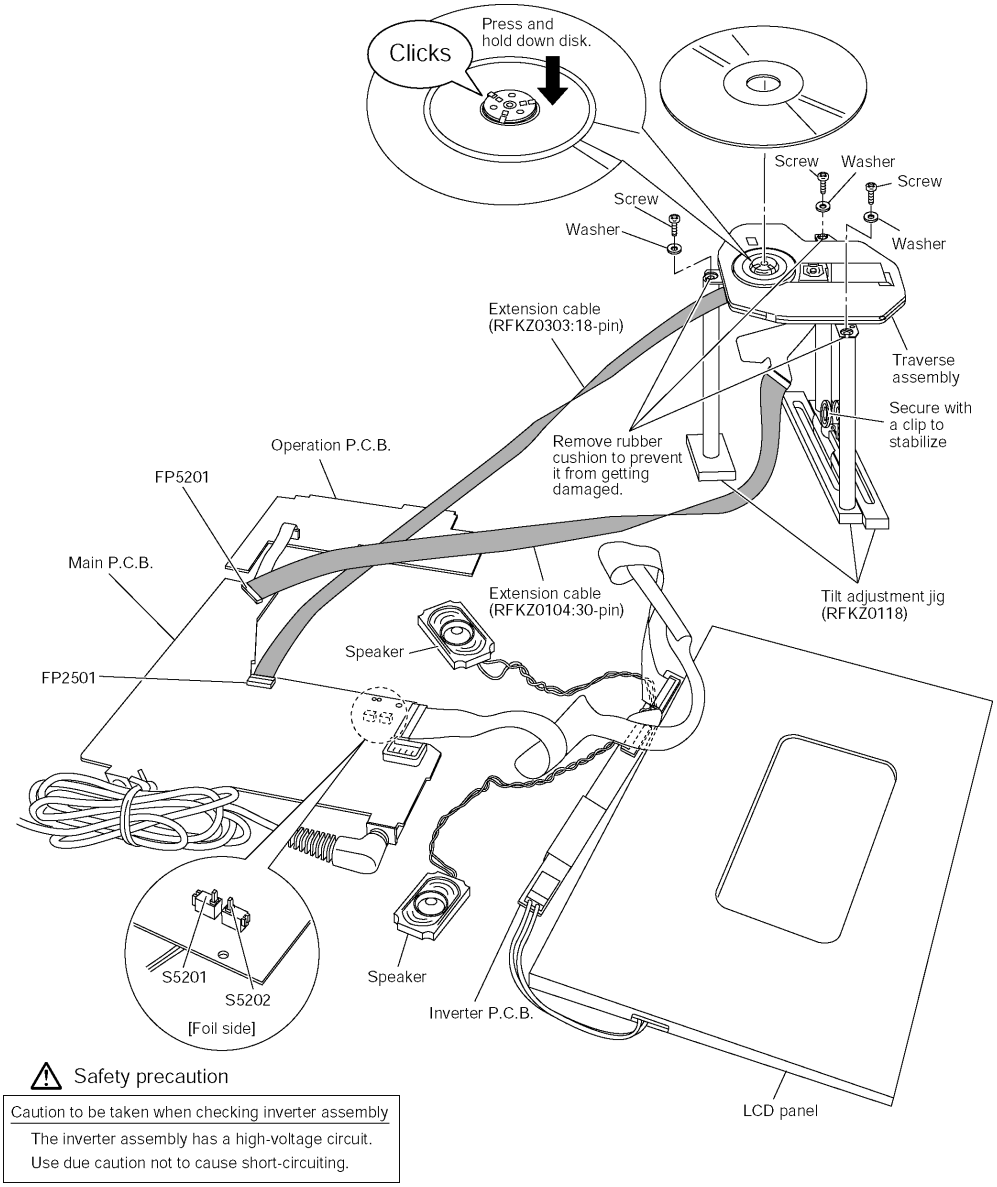

Safety precaution

Caution to be taken when checking inverter assembly
The inverter assembly has a high-voltage circuit. Use due caution not to cause short-circuiting.

9 SELF-DIAGNOSIS FUNCTION AND SERVICE MODE (DVD-LS82EG)

9.1. Optical Pickup Breakdown Diagnosis

As a new feature, this unit has an “optical pick-up problem diagnosis function” and “a tilt adjustment confirmation function” built in. Use the following procedure to efficiently determine the problem and adjust tilt.If "NO DISC" is displayed, before exchanging the optical pick-up, carry out problem diagnosis first. If the present laser driving current is over 55, the optical pick-up may need to be exchanged.

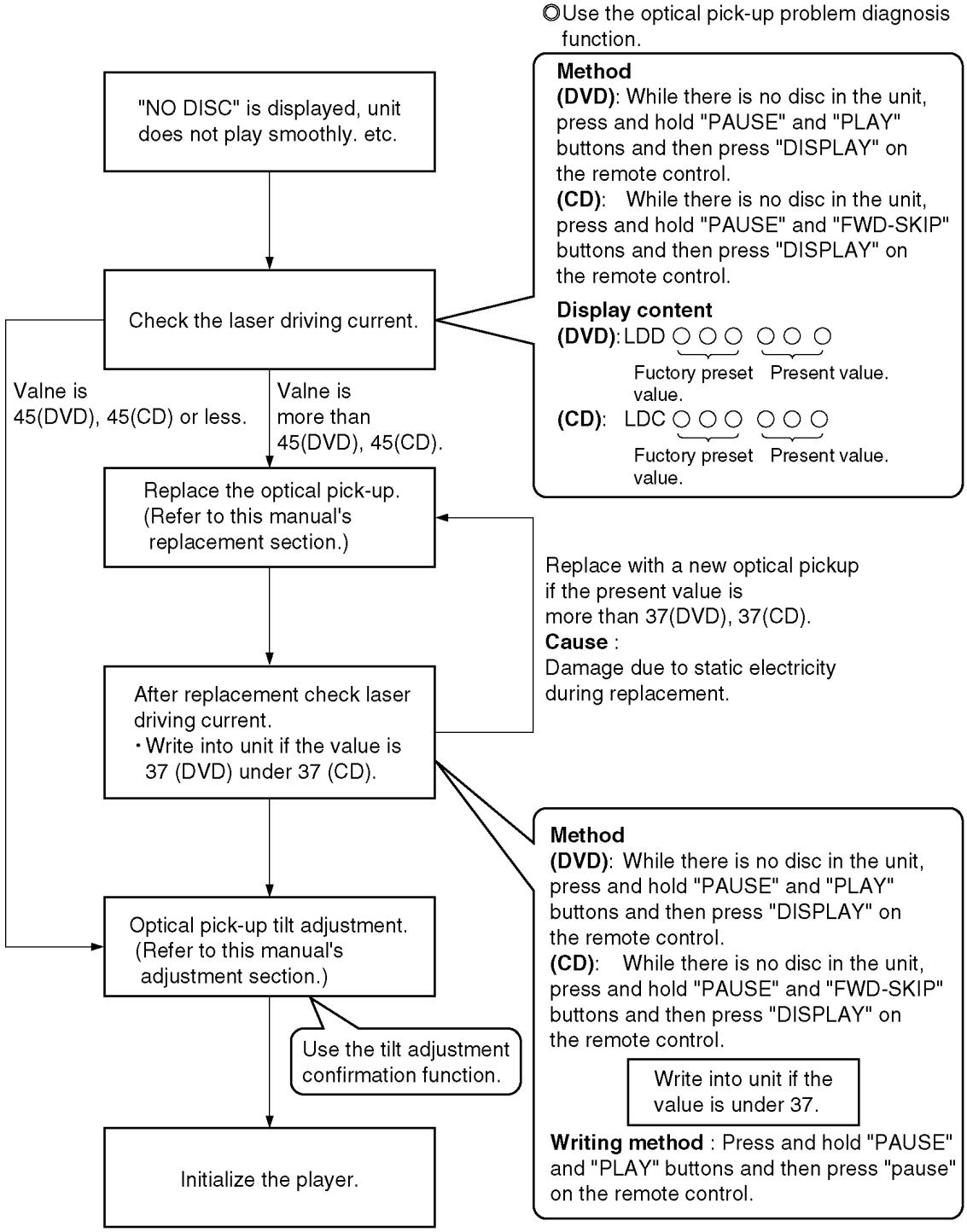

Note:

Carry out diagnosis within 3 minutes of turning the unit on. (The player’s current can increase as it warms up, so turn the unit off and allow it to cool down before diagnosis.)

Cautions to be taken when replacing the optical pickup

The optical pickup may break down due to the static electricity of human body. Take proper protection measures against static electricity before repairing the parts around the optical pickup. (See the page describing the PREVENTION OF STATIC ELECTRICITY DISCHARGE.)

1. Do not touch the areas around the laser diode and actuator.
2. Do not judge the laser diode with a tester. (The tester will be damaged easily.)
3. It is recommended to use a destaticized soldering iron for short-circuiting or removing the laser diode. (Recommended soldering iron) HAKKO ESD Product
4. Solder the land of the flexible cable in the optical pickup.

Note:

- When using a soldering iron which is not destaticized, short-circuit the terminal face of the flexible case with a clip. After that, short-circuit the land.
- After the repairing work is completed, remove the solder according to the correct procedure shown in this Technical Guide.

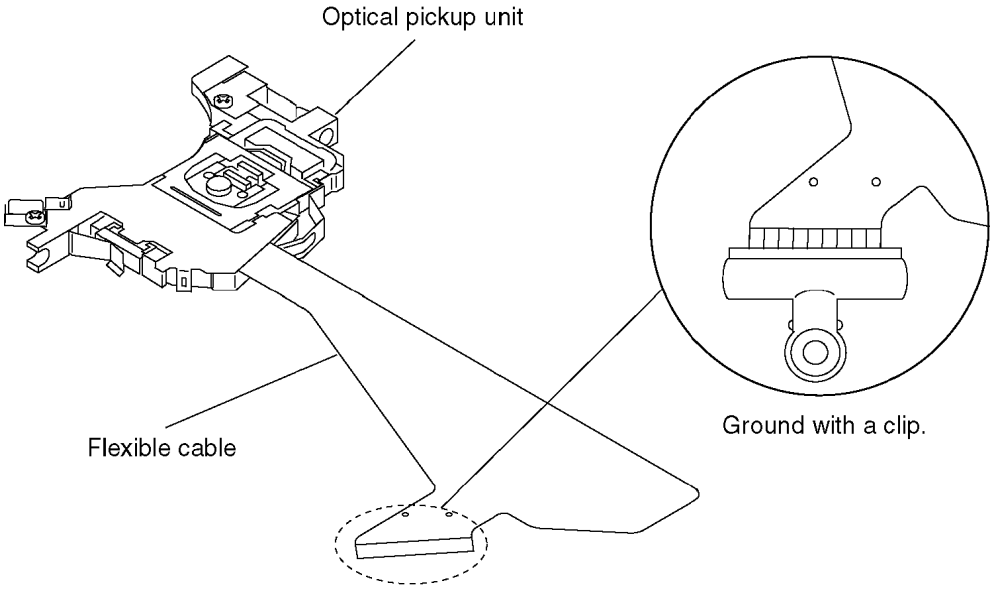

9.2. UHF displays

Use the internal service mode for evaluation of malfunctions.

Display Method	Display	Diagnosis
Items displayed when in use	CHECK THE DISC	Focus error
	H01	Inner cover trouble
	H02	Spindle servo error
	H03	Traverse error
	H04	Tracking servo error
	H05	Seek error
Press the "0" button on the remote control while holding down the PAUSE and PLAY buttons on the player. The last error code generated is saved in the EEPROM	F0**	Disc format error
	F1**	Disc code error
	F2**	Decoder LSI error
	F5**	DSC
	F6**	ECC error
	F7**	Microcomputer error
	F8**	Microcomputer error

9.3. Service Mode Table 1

The service modes can be activated by pressing various button combination on the player and remote control unit.

Player buttons	Remote control unit buttons	Application	Note
PAUSE + PLAY	0	Displaying the UHF display F_ _ _	Refer to section 9.4. DVD Self Diagnostic Function-Error Code (UHF Display).
	5	Jitter check, tilt adjustment *Display shows xx_yyyzz "xx" and "zz" shown to the right have nothing to do with the jitter value. "xx" is the error counter, while "zz" is the focus drive value. Refer to section 12.4.1. for Optical pick gate adjustment.	Refer to section 12.4. Optical adjustment .
	6	Checking the region numbers and broadcast system	
	7	Checking the program version	Check the IC3008 FLASH ROM program.
	9	Lighting Confirmation Function of Display Tube	
	DISPLAY	Checking the laser drive current	Refer to section 8.5. Optical pick-up unit.
	PAUSE	Writing the laser drive current value after replacing the optical pickup (do not use for anything other than optical pickup replacement)	
PAUSE BWD-SKIP PLAY	—	The user setting is returned to the state of the factory shipment.	

9.4. DVD Self Diagnostic Function-Error Code

<Displayed during normal operations>

Error Code	Error Content	Additional error explanation	Defect 1	Defect 2	Defect 3	Defect 4
	U, H error					
U11	Focus error					
U15	DVD-R not finalized					
H01	Tray loading error					
H02	Spindle servo error	(Spindle servo, DSC SP motor, CLV servo error)				
H03	Traverse servo error					
H04	Tracking servo error					
H05	Seek error					
H06	Power error	Cannot switch off the power because of the panel and system computer communication error				
H07	Spindle motor drive error					
	DSC related					
F500	DSC error	DSC stops in the occurrence of servo error (startup, focus error, etc)	OPU	DV 5.0 (IC3001)	DV 5.0 (IC3001)	servo drive
F501	DSC not Ready	DSC-system computer communication error (Communication failure caused by idling of DSC)	DV 5.0 (IC3001)	DV 5.0 (IC3001)		
F502	DSC Time out error	Similar disposal as F500	OPU	DV 5.0 (IC3001)	DV 5.0 (IC3001)	servo drive
F503	DSC communication Failure	Communication error (result error occurred although communication command was sent)	DV 5.0 (IC3001)	DV 5.0 (IC3001)	EEPROM (IC3002)	
F505	DSC Attention error	Similar disposal as F500	OPU	DV 5.0 (IC3001)	DV 5.0 (IC3001)	servo drive
F506	Invalid media	Disc is flipped over, TOC unreadable, incompatible disc	DISC	DV 5.0 (IC3001)	DV 5.0 (IC3001)	DV 5.0 (IC3001)
	ODC related					
F600	Access failure to management information caused by demodulation error	Operation stopped because navigation data is not accessible caused by the demodulation defect	DV 5.0 (IC3001)	DV 5.0 (IC3001)	DV 5.0 (IC3001)	
F601	Indeterminate sector ID requested	Operation stopped caused by the request to access abnormal ID data	DV 5.0 (IC3001)	DV 5.0 (IC3001)	DV 5.0 (IC3001)	
F602	Access failure to LEAD-IN caused by demodulation error	LEAD IN data unreadable				
F603	Access failure to KEYDET caused by demodulation error	Access failure to CSS data of disc				
F610	ODC abnormality	No permission for command execution	DV 5.0 (IC3001)			
F611	6626 QCODE don't read Error	Access failure to seek address in CD series	DV 5.0 (IC3001)			

Error Code	Error Content	Additional error explanation	Defect 1	Defect 2	Defect 3	Defect 4
F612	No CRC OK for a specific time	Access failure to ID data in DVD series	DV 5.0 (IC3001)			
F630	No reply to KEY DET enquiry	(for internal use only)				
F631	CPPM KEY DET is not available till the FILE terminal	(CPPM file system is unreadable caused by scratches)	DISC	CPPM		
F632	CPPM KEY DET is not available	Been revoked or falsified	DISC	EEPROM (IC3002)	CPPM (*1)	
	Disc code					
F103	Illegal highlight Position	Big possibility of disc specification violation during highlight display	DISC			
	HIC Error					
F4FF	Force initialize failure (time out)		EEPROM (IC3002)	DV 5.0 (IC3001)	DV 5.0 (IC3001)	DV 5.0 (IC3001)
	Micro computer error					
F700	MBX overflow	When replying message to disc manager				
F701	Message command does not end	Next message is sent before replying to disc manager				
F702	Message command changes	Message is changed before it is sent as a reply to disc manager				
F880	Task number is not appropriate	Message coming from a non-existing task				
F890	Sending message when message is being sent to AV task	Sending message to AV task				
F891	Message couldn't be sent to AV task	Begin sending message to AV task				
F893	FROM falsification		FROM (IC3008)	DV 5.0 (IC3001)		
F894	EEPROM abnormality		EEPROM (IC3002)	Serial communicat ion on lone		
F895	Language area abnormality	Firm version agreement check for factory preset setting failure prevention	FROM (IC3008)			
F896	No existence model	Firm version agreement check for factory preset setting failure prevention	FROM (IC3008)			
F897	Initialize is not completed	Initialize completion check for factory preset setting failure prevention				
F8A0	Message command is not appropriate	Begin sending message to AV task				

Note:

An error code will be canceled if a power supply is turned OFF.

*1: CPPM is the copy guard function beforehand written in the disc for protection of copyrights.

9.5. Last Error Code saved during NO PLAY

Error code	Error Content
F0BF	6) Cannot playback because physical layer is not recognizable
F0C0	8) DVD: Cannot playback because it is not DVD Video/Audio/VR
F0C1	9) DVD: Prohibited by the restricted region code
F0C2	A) DVD: PAL restricted playback
F0C3	B) DVD: Parental lock setting prohibits the playback of the entire title
F0C4	C) VCD: Prohibited because it is in PHOTO CD format
F0C5	VCD/CD: Prohibited because it is CDROM without CD-DA

9.6. Service mode table

Pressing various button combinations on the player and remote control unit can activate the service modes.

Item	Player Mode and Button Combination	Function	Display	Cancellation Method
Jitter check without monitor	In PLAY mode, press PAUSE and PLAY button son the player, and "5" or TITLE button on the remote control unit.	Jitter check without monitor outputJitter rate is measured and displayed.Measurement is repeatedly done in the cycleof 1 second. Reading Error Counter startsfrom zero upon mode setting. When datareading in the target block fails, the counteradvances by one increment. When the failureis caused by a minor error, it may becorrected through reading retrials. In thiscase, the counter advances by one. When theerror persists after retrials, the counter mayjump by two or more.	J xxx__yyy_zz (J xxx/yyy zz) Focus Drive Value Reading Error Counter J itter Rate Jitter Check Mode Jitter Rate is shown in decimal notation to one decimal place. "J 078 000 84" indicates Jitter Rate of 7.8%.	Press STOP or OPEN button.
Region display	In STOP mode, press PAUSE and PLAY button son the player, and "6" or CURSOR UP button on the remote control unit.	Region Display	x__yy__zzz_ (xyyzzz) Panel Controller Jumper information N:NTSC / 6:PAL60 N:noPAL / P:PAL Region No.	Cancelled automatically after 5 sec.
Version display	In STOP mode, press PAUSE and PLAY button son the player, and "7" or MENU button on the remote control unit.	Version Display	srrr__xxxyzzz (srrr_x/xxyzzz) Number System Controller Release System Controller Model Number System Controller Generation Panel Controller Release Number Panel Controller Model Number	Cancelled automatically after 5 sec.
Occurrerd ECC error and decoding error display	In STOP mode, press PAUSE and PLAY buttons on the player, and "8" or A.SRD button on the remote control unit.	Occurred ECC error and decoding error numbers are displayed.Counters start from zero upon mode setting. They are incremented each time an error occurs. They display the bottom two digits of decimal notation only.	E__xx__yy_zz (ECC xx/yy zz) Parsing Error (bsi err) Video Decoding Error (dec err) ECC Reading Error Count	Press STOP or OPEN button.
All display FL/LED are lit	In ** mode, press PAUSE and PLAY buttons on the player, and "9" or CURSOR RIGHT button on the remote control unit.	All display FL/LED are lit.		Press PAUSE and OPEN buttons on the player, and "9" button on the remote control unit.
Errer code display	In ** mode, press PAUSE and PLAY buttons on the player, and "0" or CURSOR LEFT button on the remote control unit. * When the cursor on the display is moved up or down, the panel controller's history number changes,the unit sends out thecommand accordingly.	Error Code Display The latest error code stored in EEPROM is displayed.	Error code 〈play_err〉 is expressed as follows. Error code = 0xDAXX -> nn UXX(／nnUXX) Error code = 0xDBXX -> nn HXX(／nnHXX) Error code = 0xDXXX -> nn FXXX(／nnFXXX) Error code = 0x0000 -> nn F---(／nnF---) Other error codes -> nnXXXX(/nnXXXX) "nn" denotes history number.	Cancelled automatically after 5 sec.

Item	Player Mode and Button Combination	Function	Display	Cancellation Method
Initial laser current measurement	In STOP mode, press PAUSE and PLAY buttons on the player, and PAUSE button on the remote control unit.	Initial Laser Current MeasurementInitial laser current and current when the laseris off are measured and stored in EEPROMas initial values.	LD0__034__032 (LD0/034032) Measurement CD Laser Current Measurement DVD Laser Current Measurement Laser Current Measurement Mode The value denotes the current in decimal notation. Theabove example shows the initial current as 34mA and 32mA for DVD laser and CD laser, respectively, when the laser is switched on.	Cancelled automatically after 5 sec.
Laser current display	In STOP mode, press PAUSE and PLAY buttons on the player, and DISPLAY button on the remote control unit.	Laser Current Display Laser current is measured and displayed with the initial value stored in EEPROM. Wronglaser current is displayed when initial value required for calculation is not supplied.	LDD__034__032 (LDD/034032) Current Measurement Initial value stored in EEPROM Laser Current Measurement Mode The value denotes the current in decimal notation. The above example shows the initial current, when the laser was switched on, as 34mA and the present value as 32mA.	Cancelled automatically after 5 sec.
Resion and system confirmation version display	In STOP mode, press PAUSE and BWD-SKIP buttons on the player, and DISPLAY button on the remote control unit.	Region and System Confirmation Version display	___r__xxxyzzz (__r_x/xxyzzz) System Controller Release System Controller Model Type Number System Controller Generation Region No.	Cancelled automatically after 5 sec.
CPPM/CPRM Key confirmation	In STOP mode, press PAUSE and BWD-SKIP buttons on the player, and "1" button on the remote control unit.	CPPM/CPRM Key Confirmation Whether the check sum value for the key in EEPROM is normal or not is judged. The result is displayed.Reliability equivalent to key-supplied disc playback is not guaranteed. (Whether theoriginal key is official or not can not be judged because the check sum provided uponstorage is used.)	y z A : CPPM key - normal -: CPPM key - absent or abnormal V(U): CPRM key - normal (U display when display tube does not offer V display) -: CPRM key - absent or abnormal	Cancelled automatically after 5 sec.
Communicasion errer display	In all modes, press PAUSE and BWD-SKIP buttons on the player, and "2" button on the remote control unit.	Communication error display Number of communication errors per 30 communications is displayed.	"ERR 02 / 30" (ERR 02/30)	Cancelled automatically after 5 sec.
Debug variable display mode	In all modes, press PAUSE and BWD-SKIP buttons on the player, and "8" button on the remote control unit.	Debug variable display mode List of debug variables is displayed on GUI.	Normal	Turn secondary power off. Press PAUSE and BWD-SKIP buttons on the player, and "9" button on the remote control unit.
Jitter check with monitor output	In PLAY mode, press PAUSE and FWD-SKIP buttons on the player, and "1" button on the remote control unit.	Jitter check with monitor output Jitter rate is measured and displayed. Measurement is repeatedly done in the cycle of 1 second. Reading error counter starts from zero upon mode setting. When data reading in the target block fails, the counter advances by one increment. When the failure is caused by a minor error, it may be corrected through reading retrials. In this case, the counter advances by one. When the error persists after retrials, the counter may jump by two or more.	J xxx__yyy_zz (J xxx/yyy zz) Focus Drive Value Reading Error Counter Jitter Rate Jitter Check Mode Jitter Rate is shown in decimal notation to one place of decimal.	Press STOP or OPEN button.

Item	Player Mode and Button Combination	Function	Display	Cancellation Method
device name display	In STOP mode, press PAUSE and FWD-SKIP buttons on the player, and "4" button on the remote control unit.	Device Name display Versions for DV series displayed (in order). (HDMI and other features are scheduled as an addition in S95 and other models.)	CPU type DV_ 3201 (DV_ /3201) Display : G-Code (Common name) DV_ 2101 : MN2DS0003VPH (DV2.1VP) DV_ 2102 : MN2DS03VP1H (DV2.1VP1)or MN2DS0003APH (DV2.1AP) DV_ 2001 : MN2DS0005VP (DV2.0VP) or MN2DS0005AP (DV2.0AP) DV_ 2201 : MN2DS0004APH (DV2.2) DV_ 3201 : MN2DS0009AP (DV3.2) FlashROM type F_A (F_A /) Display : Flash Method F_A : AMD Method F_I : INTEL Method F_S : SST Method F_---- : Undetected (Note) Identification for Flash ROM type may not be possible without initialization.	Display is switched automatically after 3 sec. Cancelled automatically afterd is playing the last device.
Timer 1 check	In STOP mode, press PAUSE and FWD-SKIP buttons on the player, and "5" button on the remote control unit.	Timer 1 check Laser using timePeriods are measured separately for DVDlaser and CD laser.	T 1_1234_ 5678 (T11234/_5678) DVD laser and CD laser using times are displayed left and right, respectively.Time is displayed as a 4-digit figure in decimalnotation, using 10 hours as a unit. "0000" will follow "9999."	Cancelled automatically after 5 sec.
Timer 1 reset	While the laser using time is displayed, press STOP and FWD-SKIP buttons on the player, and "5" button on the remote control unit.	Timer 1 reset Laser using time	T 1_0000_0000 (T10000/0000)	Cancelled automatically after 5 sec.
Servo process display	In STOP mode, press PAUSE and FWD-SKIP buttons on the player, and "7" button on the remote control unit.	Servo Process display From STOP to access, Servo Process is displayed.Processes beyond PLAY are displayed normally.	XX YY (/XX YY) Servo NOW process Servo error process	Turn secondary power off.
CD laser current measurement	In STOP mode, press PAUSE and FWD-SKIP buttons on the player, and DISPLAY button on there mote control unit. Perform measurement again after turning the player off and onin succession (reason: thelaser lamp is on).	CD Laser Current Measurement CD laser current is measured and displayed with the initial value stored in EEPROM.	LDC_028_026 (LCD/028026) Measured Current Initial current stored in EEPROM CD laser current measurement mode The value denotes the current in decimal notation. Theabove example shows the initial current as 28mA and the measured value as 26mA.	Cancelled automatically after 5 sec.

9.7. Lens cleaning

When cleaning the lens, use the lens cleaner which product part No. SZZP1038C.

10 SELF-DIAGNOSIS FUNCTION AND SERVICE MODE (Except for DVD-LS82EG)

10.1. Optical Pickup Breakdown Diagnosis

As a new feature, this unit has an “optical pick-up problem diagnosis function” and “a tilt adjustment confirmation function” built in. Use the following procedure to efficiently determine the problem and adjust tilt.If "NO DISC" is displayed, before exchanging the optical pick-up, carry out problem diagnosis first. If the present laser driving current is over 55, the optical pick-up may need to be exchanged.

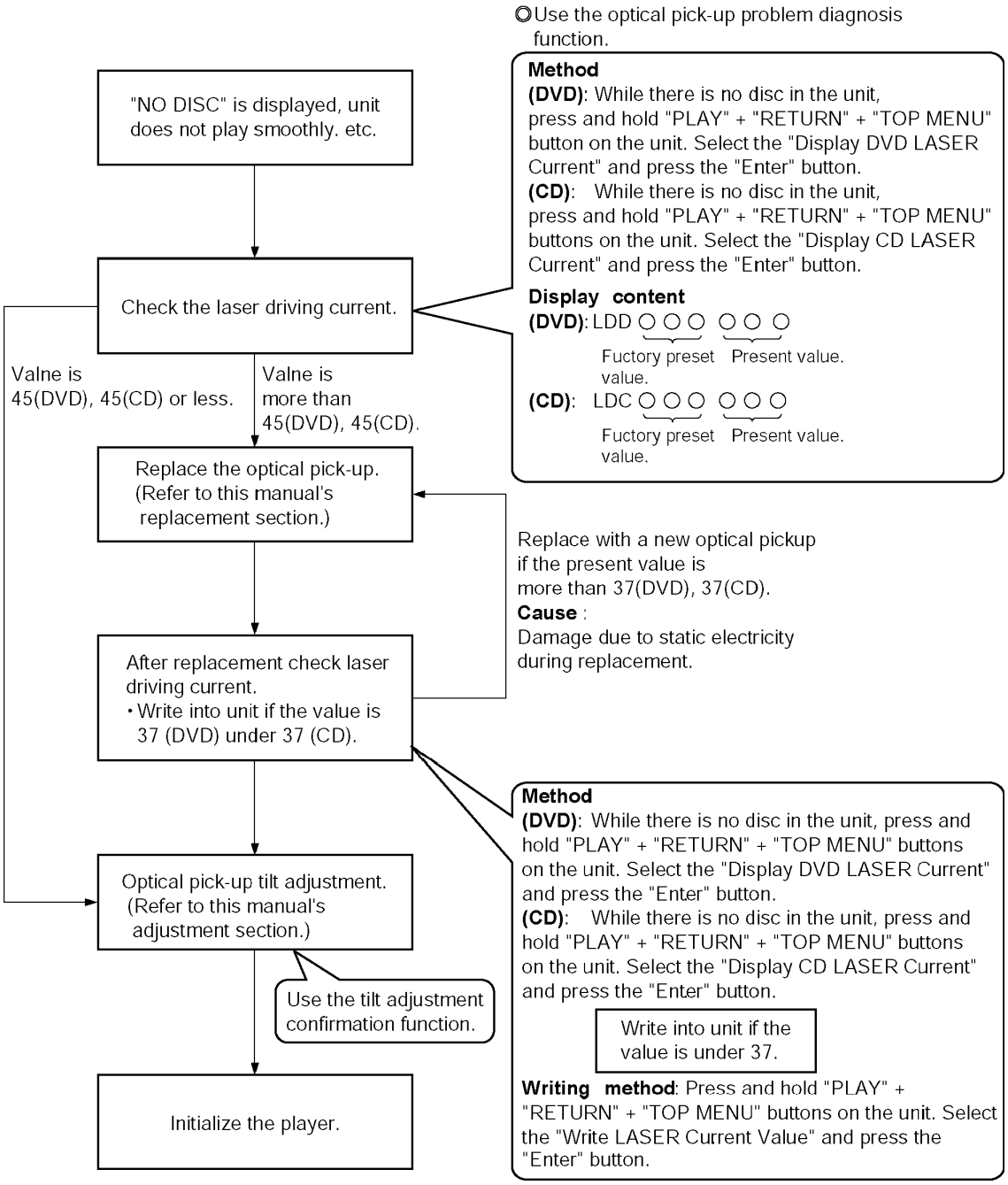

Note:

Carry out diagnosis within 3 minutes of turning the unit on. (The player’s current can increase as it warms up, so turn the unit off and allow it to cool down before diagnosis.)

Cautions to be taken when replacing the optical pickup

The optical pickup may break down due to the static electricity of human body. Take proper protection measures against static electricity before repairing the parts around the optical pickup. (See the page describing the PREVENTION OF STATIC ELECTRICITY DISCHARGE.)

1. Do not touch the areas around the laser diode and actuator.
2. Do not judge the laser diode with a tester. (The tester will be damaged easily.)
3. It is recommended to use a destaticized soldering iron for short-circuiting or removing the laser diode. (Recommended soldering iron) HAKKO ESD Product
4. Solder the land of the flexible cable in the optical pickup.

Note:

- When using a soldering iron which is not destaticized, short-circuit the terminal face of the flexible case with a clip. After that, short-circuit the land.
- After the repairing work is completed, remove the solder according to the correct procedure shown in this Technical Guide.

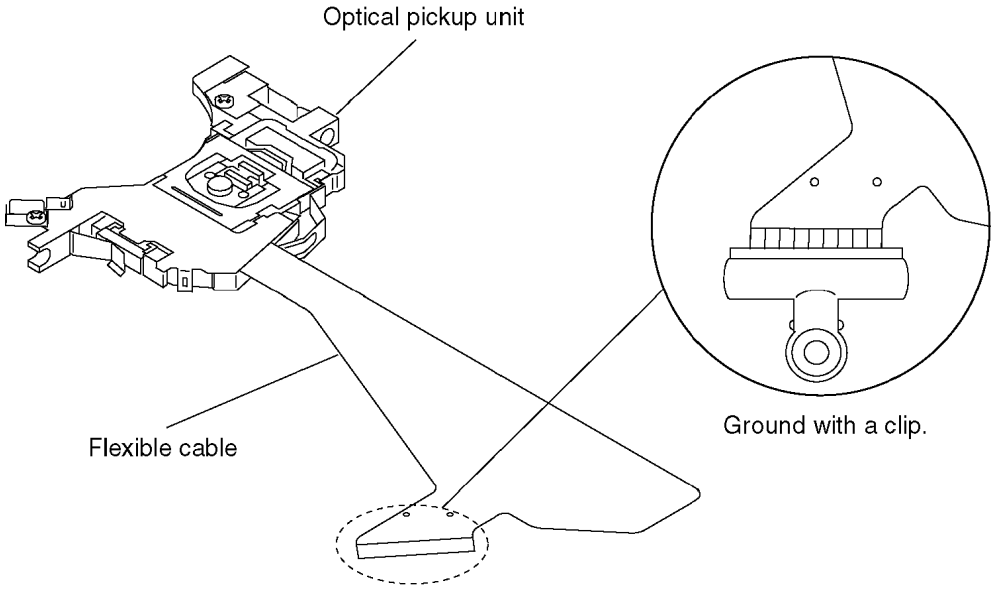

10.2. UHF displays

Use the internal service mode for evaluation of malfunctions.

Display Method	Display	Diagnosis
Items displayed when in use	CHECK THE DISC	Focus error
	H01	Inner cover trouble
	H02	Spindle servo error
	H03	Traverse error
	H04	Tracking servo error
	H05	Seek error
Press the [PLAY] + [RETURN] + [TOP MENU] buttons on the unit. Select the “Display ErrorCode” and press the “Enter” button. The last error code generated is saved in the EEPROM	F0**	Disc format error
	F1**	Disc code error
	F2**	Decoder LSI error
	F5**	DSC
	F6**	ECC error
	F7**	Microcomputer error
	F8**	Microcomputer error

10.3. Service Mode Table 1

Pressing buttons PLAY, RETURN and TOP MENU in same time at the unit and remote control. Service mode menu will be display. Select menu by cursor and press the Enter button.

Player buttons	Display	Application	Note
SET PLAY + RETURN + TOP MENU	Display ErrorCode	Displaying the UHF display F_ _ _	Refer to section 10.4. DVD Self Diagnostic Function-Error Code (UHF Display).
	Display Jitter	Jitter check, tilt adjustment *Display shows xx_yyyzz "xx" and "zz" shown to the right have nothing to do with the jitter value. "xx" is the error counter, while "zz" is the focus drive value. Refer to section 12.4.1. for Optical pick gate adjustment.	Refer to section 12.4. Optical adjustment .
	Display Region	Checking the region numbers and broadcast system	
	Display Version	Checking the program version	Check the IC3008 FLASH ROM program.
	Lighting Confirmation Function	Lighting Confirmation Function of Display Tube	
	Display DVD/CD LASER Current	Checking the laser drive current	Refer to section 8.5. Optical pick-up unit.
	Write LASER Current Value	Writing the laser drive current value after replacing the optical pickup (do not use for anything other than optical pickup replacement)	

10.4. DVD Self Diagnostic Function-Error Code

Error Code	Error Content	Additional error explanation	Defect 1	Defect 2	Defect 3	Defect 4
	U, H error					
U11	Focus error					
U15	DVD-R not finalized					
H01	Tray loading error					
H02	Spindle servo error	(Spindle servo, DSC SP motor, CLV servo error)				
H03	Traverse servo error					
H04	Tracking servo error					
H05	Seek error					
H06	Power error	Cannot switch off the power because of the panel and system computer communication error				
H07	Spindle motor drive error					
	DSC related					
F500	DSC error	DSC stops in the occurrence of servo error (start up, focus error, etc)	OPU	DV5.0 (IC3001)	DV5.0 (IC3001)	servo drive
F501	DSC not Ready	DSC-system computer communication error (Communication failure caused by idling of DSC)	DV5.0 (IC3001)	DV5.0 (IC3001)		
F502	DSC Time out error	Similar disposal as F500	OPU	DV5.0 (IC3001)	DV5.0 (IC3001)	servo drive
F503	DSC communication Failure	Communication error (result error occurred although communication command was sent)	DV5.0 (IC3001)	DV5.0 (IC3001)	EEPROM (IC3002)	
F505	DSC Attention error	Similar disposal as F500	OPU	DV5.0 (IC3001)	DV5.0 (IC3001)	servo drive
F506	Invalid media	Disc is flipped over, TOC unreadable, incompatible disc	DISC	DV5.0 (IC3001)	DV5.0 (IC3001)	DV5.0 (IC3001)
	ODC related					
F600	Access failure to management information caused by demodulation error	Operation stopped because navigation data is not accessible caused by the demodulation defect	DV5.0 (IC3001)	DV5.0 (IC3001)	DV5.0 (IC3001)	
F601	Indeterminate sector ID requested	Operation stopped caused by the request to access abnormal ID data	DV5.0 (IC3001)	DV5.0 (IC3001)	DV5.0 (IC3001)	
F602	Access failure to LEAD-IN caused by demodulation error	LEAD IN data unreadable				
F603	Access failure to KEYDET caused by demodulation error	Access failure to CSS data of disc				
F610	ODC abnormality	No permission for command execution	DV5.0 (IC3001)			
F611	6626 QCODE don't read Error	Access failure to seek address in CD series	DV5.0 (IC3001)			
F612	No CRC OK for a specific time	Access failure to ID data in DVD series	DV5.0 (IC3001)			

Error Code	Error Content	Additional error explanation	Defect 1	Defect 2	Defect 3	Defect 4
F630	No reply to KEY DET enquiry	(for internal use only)				
F631	CPPM KEY DET is not available till the FILE terminal	(CPPM file system is unreadable caused by scratches)	DISC	CPPM		
F632	CPPM KEY DET is not available	Been revoked or falsified	DISC	EEPROM (IC3002)	CPPM (*1)	
	Disc code					
F103	Illegal highlight Position	Big possibility of disc specification violation during highlight display	DISC			
	HIC Error					
F4FF	Force initialize failure (time out)		EEPROM (IC3002)	DV5.0 (IC3001)	DV5.0 (IC3001)	DV5.0 (IC3001)
	Micro computer error					
F700	MBX overflow	When replying message to disc manager				
F701	Message command does not end	Next message is sent before replying to disc manager				
F702	Message command changes	Message is changed before it is sent as a reply to disc manager				
F880	Task number is not appropriate	Message coming from a non-existing task				
F890	Sending message when message is being sent to AV task	Sending message to AV task				
F891	Message couldn't be sent to AV task	Begin sending message to AV task				
F893	FROM falsification		FROM (IC3008)	DV5.0 (IC3001)		
F894	EEPROM abnormality		EEPROM (IC3002)	Serial communicat ion on lone		
F895	Language area abnormality	Firm version agreement check for factory preset setting failure prevention	FROM (IC3008)			
F896	No existence model	Firm version agreement check for factory preset setting failure prevention	FROM (IC3008)			
F897	Initialize is not completed	Initialize completion check for factory preset setting failure prevention				
F8A0	Message command is not appropriate	Begin sending message to AV task				

Note:

An error code will be canceled if a power supply is turned OFF.

*1: CPPM is the copy guard function beforehand written in the disc for protection of copyrights.

10.5. Last Error Code saved during NO PLAY

Error code	Error Content
F0BF	6) Cannot playback because physical layer is not recognizable
F0C0	8) DVD: Cannot playback because it is not DVD Video/Audio/VR
F0C1	9) DVD: Prohibited by the restricted region code
F0C2	A) DVD: PAL restricted playback
F0C3	B) DVD: Parental lock setting prohibits the playback of the entire title
F0C4	C) VCD: Prohibited because it is in PHOTO CD format
F0C5	VCD/CD: Prohibited because it is CDROM without CD-DA

10.6. Service mode table

Pressing buttons PLAY, RETURN and TOP MENU in same time at the unit and remote control. Service mode menu will be display. Select menu by cursor button and press ENTER button to activate the service modes.

Play Buttons	Service mode menu	Function	Display	Cancellation Method
SET PLAY + RETURN + TOP MENU	Display ErrorCode	Error Code Display The latest error code stored in EEPROM is displayed.	Error code 〈play_err〉 is expressed as follows. Error code = 0xDAXX -> nn UXX(／nnUXX) Error code = 0xDBXX -> nn HXX(／nnHXX) Error code = 0xDXXX -> nn FXXX(／nnFXXX) Error code = 0x0000 -> nn F---(／nnF---) Other error codes -> nnXXXX(/nnXXXX) "nn" denotes history number.	Press except cursor button to cancel menu
	Display Jitter	Jitter check without monitor outputJitter rate is measured and displayed.Measurement is repeatedly done in the cycleof 1 second. Reading Error Counter startsfrom zero upon mode setting. When datareading in the target block fails, the counteradvances by one increment. When the failureis caused by a minor error, it may becorrected through reading retrials. In thiscase, the counter advances by one. When theerror persists after retrials, the counter mayjump by two or more.	J xxx__yyy_zz (J xxx/yyy zz) Focus Drive Value Reading Error Counter J itter Rate Jitter Check Mode Jitter Rate is shown in decimal notation to one decimal place. "J 078 000 84" indicates Jitter Rate of 8.9%.	
	Display Region	Region Display	x__yy__zzz_ (xyyzzz) Panel Controller Jumper information N:NTSC / 6:PAL60 N:noPAL / P:PAL Region No.	
	Display Version	Version Display	srrr__xxxyzzz (srrr_x/xxyzzz) Number System Controller Release System Controller Model Number System Controller Generation Panel Controller Release Number Panel Controller Model Number	
	Light Confirm Function	All display FL/LED are lit.		
	Display DVD Laser Current	Laser Current Display Laser current is measured and displayed with the initial value stored in EEPROM. Wronglaser current is displayed when initial value required for calculation is not supplied.	LDD__034__032 (LDD/034032) Current Measurement Initial value stored in EEPROM Laser Current Measurement Mode The value denotes the current in decimal notation. The above example shows the initial current, when the laser was switched on, as 34mA and the present value as 32mA.	
	Display CD LASER Current	CD Laser Current Measurement CD laser current is measured and displayed with the initial value stored in EEPROM.	LDC_028_026 (LCD/028026) Measured Current Initial current stored in EEPROM CD laser current measurement mode The value denotes the current in decimal notation. Theabove example shows the initial current as 28mA and the measured value as 26mA.	
	Write Laser Current Value	Initial Laser Current MeasurementInitial laser current and current when the laseris off are measured and stored in EEPROMas initial values.	LD0__034__032 (LD0/034032) Measurement CD Laser Current Measurement DVD Laser Current Measurement Laser Current Measurement Mode The value denotes the current in decimal notation. Theabove example shows the initial current as 34mA and 32mA for DVD laser and CD laser, respectively, when the laser is switched on.	

10.7. Lens cleaning

When cleaning the lens, use the lens cleaner which product part No. SZZP1038C.

11 SERVICE PRECAUTIONS

11.1. Recovery after the dvd player is repaired

- When FROM or main P.C.B. is replaced, carry out the recovery processing to optimize the drive.

  Playback the recovery disk to process the recovery automatically.
- Recovery disc (Product number: RFKZD03R005)
- Performing recovery
  1. Load the recovery disc RFKZD03R005 on to the player and run it.
  2. Recovery is performed automatically. When it is finished, a message appears on the screen.
  3. Remove the recovery disc.
  4. Turn off the power.

Note:

This unit requires no initialization process carried out after the traditional DVD players were repaired.

When the recovery measures are taken, the customer setting will return to the factory setting as same as the procedure described in item of "Initialization" in 9.6. is carried out. Write down the contents of the setting before recovery processing, and reset the player.

11.2. Firmware version-up of the DVD player

- The firmware of the DVD player may be renewed to improve the quality including operation ability and playability to the substandard discs.processing to optimize the drive.

  The recovery disc has also firmware version-up.
- After version-up, recovery processing is executed automatically.
- Part number of the recovery disc for version-up will be noticed when it is supplied.
- Updating firmware
  1. Load the recovery disc that is supplied to the player and run it.
  2. Firmware version of the player is automatically checked. Appropriate message appears whenever necessary.
  3. Using remote controller´s cursor key, select whether version updating is to be done or not. (Selection of Yes/No)
  4. a. If Yes is selected, version updating is performed.

     b. If No is selected, only recovery is performed.
  5. a. When updating is finished, remove the disc according to the message appearing on the screen.

     b. Remove the disc according to the message appearing on the screen.
  6. Turn off the power.

Note:

If the AC power supply is shut out during version-up due to a power failure, the version-up is improperly carried out.

In such a case, replace the FROM and carry out the version-up again.

12 ADJUSTMENT PROCEDURES

<Caution>

Be sure to take static electricity countermeasures before adjusting the optical system. Adjust the optical systems according to the prescribed procedure.

12.1. Service Tools and Equipment

Application	Name	Number
Tilt adjustment	DVD test disc	DVDT-S15AS or DVDT-S01
Inspection	Extension cable (Traverse ass'y to main P.C.B.)	RFKZ0104 (30Pin)
	Extension cable (Traverse ass'y to main P.C.B.)	RFKZ0303 (18Pin)
	Tilt adj. jig	RFKZ0118
Others	Screw lock	RZZ0L01
	Grease	JGS0101
	Lubricating oil	RFKXGUD24
Confirmation	CD test disc	PVCD-K06 or any other commercially available disc
	VCD test disc	PVCD-K06 or any other commercially available disc
	Recovery disc	RFKZD03R005

12.2. Important points in adjustment

12.2.1. Important points in optical adjustment

- Optical pickup tilt adjustment is needed after replacement of the following components.

1. Optical pickup unit
2. Disc motor
3. Traverse motor
4. Optical pickup peripheral parts (such as rail)

Notes

Adjustment is generally unnecessary after replacing other parts of the traverse unit. However, make adjustment if there is a noticeable degradation in picture quality.

Optical adjustments cannot be made inside the optical pickup.

12.2.2. Important points in electrical adjustment

- Follow the adjustment procedures described in this Manual.

12.3. Storing and Handling Test Discs

- Surface precision is vital for DVD test discs. Be sure to store and handle them carefully.

1. Do not place discs directly onto the workbench, etc., after use.
2. Handle discs carefully in order to maintain their flatness. Place them into their case after use and store them vertically. Store discs in a cool place where they are not exposed to direct sunlight or air from air conditioners.
3. Accurate adjustment will not be possible if the disc is warped when placed on a surface made of glass, etc. If this happens, use a new test disc to make optical adjustments.
4. If adjustment is done using a warped disc, the adjustment will be incorrect and some discs will not be playable.

12.4. Optical adjustment

12.4.1. Optical pick gate adjustment

Measurement point	Adjustment point	Mode	Disc
-----	Tangential adjustment screw (Adjustment screw A) Radial tilt adjustment screw (Adjustment screw B)	Tracking servo "ON" Tracking servo "ON"	DVDT-S01/S15AS
Measuring apparatus		Adjustment value	
None (Use the service indication on the main unit)		Adjust the jitter value to the minimum level.	

Remove the solder shorts before trying to make the adjustment.

12.4.1.1. Preparations

1. Connect the main P.C.B. to the traverse ass'y with the extension cable.
2. Install the traverse ass'y to the tilt adjustment jig with three screws and three washers.

   Caution

   Remove the rubber cushion of the traverse ass'y.
3. Install the traverse ass'y to the disc.

   Caution

   Make sure the disc is installed on the disc motor securely.
4. Disassemble the Main P.C.B., Operation P.C.B., Inverter P.C.B. and LCD panel as shown in figure below.
5. The disc cannot be played back with the Disc cover attached. Press and hold down the S5201 and S5202 (Secure with cellulose tape)

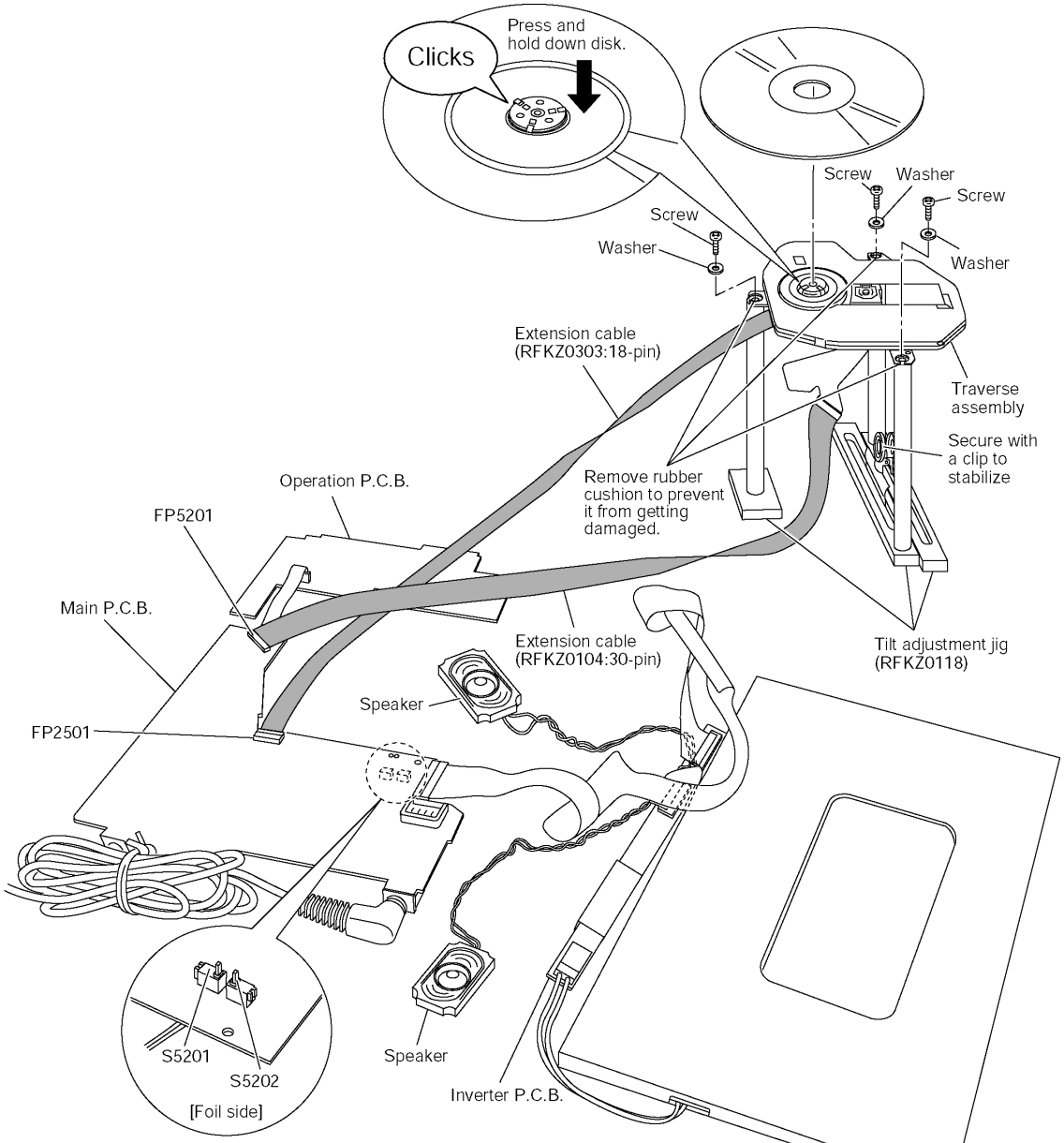

⚠ Safety precaution

Caution to be taken when checking inverter assembly
The inverter assembly has a high-voltage circuit.
Use due caution not to cause short-circuiting.

12.4.1.2. Adjustment

Locations and roles of tilt adjustment screws

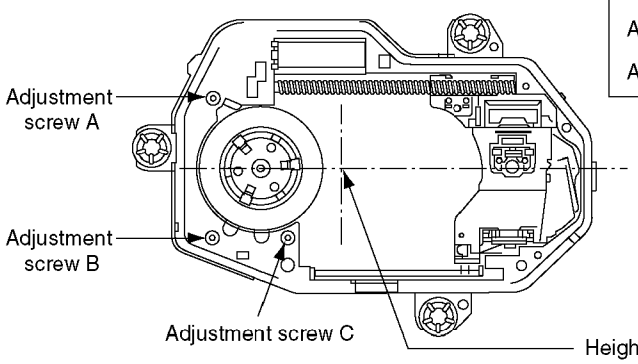

Adjustment screw A: adjustment tangential direction

Adjustment screw B: Positional references in X and Y directions

Adjustment screw C: Adjustment in radial direction

Discs	DVDT-S01	DVDT-S15AS
Inner circumference	T1	T1
Middle circumference	T8	T30
Outer circumference	T43	T43

1. Play back the disc (DVDT-S01/S15AS) and make sure the RF signal is outputted.
2. Play back the areas within a radius of 40 ± 1 mm of the disc (middle circumference).
3. Turn the adjustment screw C to minimize the jitter value in the radial direction.
   (*Once turn the screw to the full position and then back off. You should finish tightening in the tightening direction.)
4. Turn the adjustment screw A to minimize the jitter value in the tangential direction.
   (*Once turn the screw to the full position and then back off. You should finish tightening in the tightening direction.)
5. DISC height measurement (Measure the middle of the deflection of the disc and motor surface.)

The height of the turntable is accepted in case of being less than 1.0V in the DC potential difference on driver IC side of A (CKA4) and B (CKA1). (The voltmeter negative is connected and A and positive are connected B.)

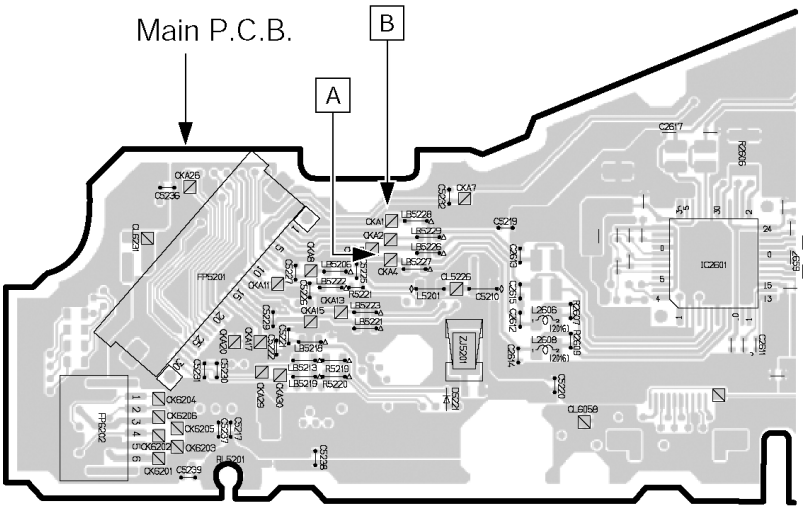

*If the measured height is out of range, adjust to the specified value using the adjustment screws A, B, and C (by the same angle).

12.4.1.3. Checking after adjustment

Play back the test disc and ordinary discs to make sure that there is not any deterioration of image quality or missing of sound at the inner, middle, and outer circumferences.

12.5. Electrical adjustment (LCD)

[How to enter into the LCD panel adjustment mode]

Play back the specified video signal (10 steps, color bas signal).

Press and hold down "Back skip" and "Pause" of the main unit at the same time while pressing "Menu" on the remote control unit.

[The DVD player is now in the FT02 mode]

Press the "Forward skip button twice to enter into the FT04 mode (LCD panel adjustment mode).

Press the "Playback" button to play back the signal which has been played back before stopping and then, press the "Pause (still) button.

[How to exit to normal mode]

(Exit the F4 mode)

1. Turn off the primary power supply (Remove the DC power supply).

Turn on the power supply. Press the "Stop" to stop the system.

Press "Cancel" on the remote control unit (The Cancel key is enabled only when the system is stopped.)

●Whenever the LCD panel is replaced, make the following checks and adjustments.

●Press the "Enter" key and fix the settings.

●When the EEPROM" (IC3002) of the Main P.C.B. is replaced, call up the LCD Panel adjustment mode (FT04) and execute the AUDIO on the remove control unit and then check the condition of the screen. Make adjustments as necessary.

12.5.1. Adjusting VCO oscillation frequency

Adjustment is required when	Check point	
The synchronization of the LCD screen is irregular after any VCO-related circuit part is replaced	TP8201	
Adjustment procedure	Adjustment UP	Adjustment DOWN
Use “1” on remote control unit.	DVD player/remote control unit △	DVD player/remote control ▽
Details of adjustment	Input video signal	
Press “ △ “ and ” ▽ ”buttons on remote controller, set the right side number to “71”.	-----	

12.5.2. Adjusting DC offset of impressed voltage

Adjustment is required when	Check point	
Noise such as horizontal stripes is found on the screen.	TL8401	
Adjustment procedure	Adjustment UP	Adjustment DOWN
Use “3” on remote control unit.	DVD player/remote control unit △	DVD player/remote control ▽
Details of adjustment	Input video signal	
Press “ △ “and” ▽ ”buttons on remote controller, set the right side number to “AI”.	10step monochrome	

12.5.3. Adjusting white balance red/subcontrast red

Adjustment is required when	Check point	
Remarkable deviation in white balance is found	TL8602	
Adjustment procedure	Adjustment UP	Adjustment DOWN
Use “6” on remote control unit.	DVD player/remote control unit △ ▷	DVD player/remote control ▽ ◁
Details of adjustment	Input video signal	
(White balance) Press “ ▷ “and “ ◁ “ buttons on remote controller, set the number of center to “80”. (Sub contrast) Press “ △ “ and “ ▽ “ buttons on remote controller, set the right side number to “7E”.	10step monochrome	

12.5.4. Adjusting whitebalance blue/subcontrast blue

Adjustment is required when	Check point	
Remarkable deviation in white balance is found	TL8604	
Adjustment procedure	Adjustment UP	Adjustment DOWN
Use “7” on remote control unit.	DVD player/remote control unit △ ▷	DVD player/remote control ▽ ◁
Details of adjustment	Input video signal	
(White balance) Press “ ▷ “and “ ◁ “ buttons on remote controller, set the number of center to “71”. (Sub contrast) Press “ △ “and “ ▽ “ buttons on remote controller, set the right side number to “84”.	10step monochrome	

12.5.5. Adjusting amplitude of impressed voltage

Adjustment is required when	Check point	
-----	TL8401	
Adjustment procedure	Adjustment UP	Adjustment DOWN
Use “2” on remote control unit.	DVD player/remote control unit △	DVD player/remote control ▽
Details of adjustment	Input video signal	
Press “ △ “ and “ ▽ “ buttons on remote controller, set the right side number to “15”.	10step monochrome	

12.5.6. Adjusting pedestal

Adjustment is required when	Check point	
-----	TL8603	
Adjustment procedure	Adjustment UP	Adjustment DOWN
Use “4” on remote control unit.	DVD player/remote control unit ▷	DVD player/remote control ◁
Details of adjustment	Input video signal	
Press “ ▷ “ and “ ◁ “ buttons on remote controller, set the number of center to “91”.	10step monochrome	

12.5.7. Adjusting contrast

Adjustment is required when	Check point	
-----	TL8603	
Adjustment procedure	Adjustment UP	Adjustment DOWN
Use “4” on remote control unit.	DVD player/remote control unit △	DVD player/remote control ▽
Details of adjustment	Input video signal	
Press “ △ “ and “ ▽ “ buttons on remote controller, set the right side number to “71”.	10step monochrome	

12.5.8. Adjusting TINT

Adjustment is required when	Check point	
-----	TL8604	
Adjustment procedure	Adjustment UP	Adjustment DOWN
Use “5” on remote control unit.	DVD player/remote control unit ▷	DVD player/remote control ◁
Details of adjustment	Input video signal	
Press “ ▷ “ and “ ◁ “ buttons on remote controller, set the number of center to “75”.	75% color bar	

12.5.9. Adjusting color

Adjustment is required when	Check point	
-----	TL8604	
Adjustment procedure	Adjustment UP	Adjustment DOWN
Use “5” on remote control unit.	DVD player/remote control unit △	DVD player/remote control ▽
Details of adjustment	Input video signal	
Press “ △ “ and “ ▽ “ buttons on remote controller, set the right number to “81”.	75% color bar	

12.6. Electrical check (Video output check)

12.6.1. Checking video output (composite signal)

Check point	Mode	Disc
Video output terminal	Color bar playback (75%)	DVDT-S15AS
Measuring apparatus	Check value	
Oscilloscope	Y: 1000 mV ± 100 mV Cyan: 650 mV ± 100 mV	

Purpose: Keep the interchangeability of video signal output

1. Terminate the composite signal of the video output terminal with 75 Ω and input into the oscilloscope.
2. Select color bar 75% from the titles of the DVD test disc and play back.
3. Check that the composite signal output is the following value:

Y=1000mV±100mV
Cyan=650mV±100mV

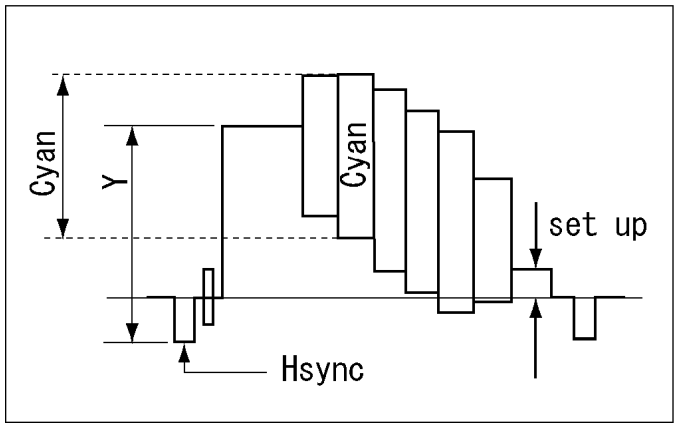

13 Abbreviations

INITIAL/LOGO		ABBREVIATIONS
A	A0~UP	ADDRESS
	ACLK	AUDIO CLOCK
	AD0~UP	ADDRESS BUS
	ADATA	AUDIO PES PACKET DATA
	ALE	ADDRESS LATCH ENABLE
	AMUTE	AUDIO MUTE
	AREQ	AUDIO PES PACKET REQUEST
	ARF	AUDIO RF
	ASI	SERVO AMP INVERTED INPUT
	ASO	SERVO AMP OUTPUT
	ASYNC	AUDIO WORD DISTINCTION SYNC
B	BCK	BIT CLOCK (PCM)
	BCKIN	BIT CLOCK INPUT
	BDO	BLACK DROP OUT
	BLKCK	SUB CODE BLOCK CLOCK
	BOTTOM	CAP. FOR BOTTOM HOLD
	BYP	BYPATH
	BYTCK	BYTE CLOCK
C	CAV	CONSTANT ANGULAR VELOCITY
	CBDO	CAP. BLACK DROP OUT
	CD	COMPACT DISC
	CDSCK	CD SERIAL DATA CLOCK
	CDSRDATA	CD SERIAL DATA
	CDRF	CD RF (EFM) SIGNAL
	CDV	COMPACT DISC-VIDEO
	CHNDATA	CHANNEL DATA
	CKSL	SYSTEM CLOCK SELECT
	CLV	CONSTANT LINEAR VELOCITY
	COFTR	CAP. OFF TRACK
	CPA	CPU ADDRESS
	CPCS	CPU CHIP SELECT
	CPDT	CPU DATA
	CPH1~3	CLOCK PULSE SOURCE DRIVE
	CPUADR	CPU ADDRESS LATCH
	CPUADT	CPU ADDRESS DATA BUS
	CPUIRQ	CPU INTERRUPT REQUEST
	CPRD	CPU READ ENABLE
	CPV	GATE DRIVER CLOCK PULSE
	CPWR	CPU WRITE ENABLE
	CS	CHIP SELECT
	CSYNCIN	COMPOSITE SYNC IN
	CSYNCOUT	COMPOSITE SYNC OUT
D	DACCK	D/A CONVERTER CLOCK
	DEEMP	DEEMPHASIS BIT ON/OFF
	DEMPH	DEEMPHASIS SWITCHING
	DIG0~UP	FL DIGIT OUTPUT
	DIN	DATA INPUT
	DMSRCK	DM SERIAL DATA READ CLOCK
	DMUTE	DIGITAL MUTE CONTROL
	DO	DROP OUT
	DOUT0~UP	DATA OUTPUT
	DRF	DATA SLICE RF (BIAS)
	DRPOUT	DROP OUT SIGNAL
	DREQ	DATA REQUEST
	DRESP	DATA RESPONSE
	DSC	DIGITAL SERVO CONTROLLER
	DSLF	DATA SLICE LOOP FILTER
	DVD	DIGITAL VIDEO DISC

INITIAL/LOGO		ABBREVIATIONS
E	EC	ERROR TORQUE CONTROL
	ECR	ERROR TORQUE CONTROL REFERENCE
	ENCSEL	ENCODER SELECT
	ETMCLK	EXTERNAL M CLOCK (81MHz/40.5MHz)
	ETSCLK	EXTERNAL S CLOCK (54MHz)
F	FBAL	FOCUS BALANCE
	FCLK	FRAME CLOCK
	FE	FOCUS ERROR
	FFI	FOCUS ERROR AMP INVERTED INPUT
	FEO	FOCUS ERROR AMP OUTPUT
	FG	FREQUENCY GENERATOR
	FSC	FREQUENCY SUB CARRIER
	FSCK	FS (384 OVER SAMPLING) CLOCK
G	GND	COMMON GROUNDING (EARTH)
H	HA0~UP	HOST ADDRESS
	HD0~UP	HOST DATA
	HINT	HOST INTERRUPT
	HRXW	HOST READ/WRITE
I	IECOUT	IEC958 FORMAT DATA OUTPUT
	IPFRAG	INTERPOLATION FLAG
	IREF	I (CURRENT) REFERENCE
	ISEL	INTERFACE MODE SELECT
L	LDON	LASER DIODE CONTROL
	LPC	LASER POWER CONTROL
	LRCK	L CH/R CH DISTINCTION CLOCK
M	MA0~UP	MEMORY ADDRESS
	MCK	MEMORY CLOCK
	MCKI	MEMORY CLOCK INPUT
	MCLK	MEMORY SERIAL COMMAND CLOCK
	MDATA	MEMORY SERIAL COMMAND DATA
	MDQ0~UP	MEMORY DATA INPUT/OUTPUT
	MDQM	MEMORY DATA I/O MASK
	MLD	MEMORY SERIAL COMMAND LOAD
	MPEG	MOVING PICTURE EXPERTS GROUP
O	ODC	OPTICAL DISC CONTROLLER
	OEH	SOURCE DRIVER OUTPUT ENABLE
	OEV 1, 2	GATE DRIVER OUTPUT ENABLE
	OFTR	OFF TRACKING
	OSCI	OSCILLATOR INPUT
	OSCO	OSCILLATOR OUTPUT
	OSD	ON SCREEN DISPLAY
P	P1~UP	PORT
	PCD	CD TRACKING PHASE DIFFERENCE
	PCK	PLL CLOCK
	PDVD	DVD TRACKING PHASE DIFFERENCE
	PEAK	CAP. FOR PEAK HOLD
	PLLCLK	CHANNEL PLL CLOCK
	PLLOK	PLL LOCK
	PWMCTL	PWM OUTPUT CONTROL
	PWMDA	PULSE WAVE MOTOR DRIVE A
	PWMOA, B	PULSE WAVE MOTOR OUT A, B

INITIAL/LOGO		ABBREVIATIONS
R	RE	READ ENABLE
	RFENV	RF ENVELOPE
	RFO	RF PHASE DIFFERENCE OUTPUT
	RS	(CD-ROM) REGISTER SELECT
	RSEL	RF POLARITY SELECT
	RST	RESET
	RSV	RESERVE
S	SBI0, 1	SERIAL DATA INPUT
	SBO0	SERIAL DATA OUTPUT
	SBT0, 1	SERIAL CLOCK
	SCK	SERIAL DATA CLOCK
	SCKR	AUDIO SERIAL CLOCK RECEIVER
	SCL	SERIAL CLOCK
	SCLK	SERIAL CLOCK
	SDA	SERIAL DATA
	SEG0~UP	FL SEGMENT OUTPUT
	SELCLK	SELECT CLOCK
	SEN	SERIAL PORT ENABLE
	SIN1, 2	SERIAL DATA IN
	SOUT1, 2	SERIAL DATA OUT
	SPDI	SERIAL PORT DATA INPUT
	SPDO	SERIAL PORT DATA OUTPUT
	SPEN	SERIAL PORT R/W ENABLE
	SPRCLK	SERIAL PORT READ CLOCK
	SPWCLK	SERIAL PORT WRITE CLOCK
	SQCK	SUB CODE Q CLOCK
	SQCX	SUB CODE Q DATA READ CLOCK
	SRDATA	SERIAL DATA
	SRMADR	SRAM ADDRESS BUS
	SRMDT0~7	SRAM DATA BUS 0~7
	SS	START/STOP
	STAT	STATUS
	STCLK	STREAM DATA CLOCK
	STD0~UP	STREAM DATA
	STENABLE	STREAM DATA INPUT ENABLE
	STH	SOURCE START PULSE
	STSEL	STREAM DATA POLARITY SELECT
	STV	GATE DRIVER SCAN START PULSE
	STVALID	STREAM DATA VALIDITY
	SUBC	SUB CODE SERIAL
	SBCK	SUB CODE CLOCK
	SUBQ	SUB CODE Q DATA
	SYSCLK	SYSTEM CLOCK
T	TE	TRACKING ERROR
	TIBAL	BALANCE CONTROL
	TID	BALANCE OUTPUT 1
	TIN	BALANCE INPUT
	TIP	BALANCE INPUT
	TIS	BALANCE OUTPUT 2
	TPSN	OP AMP INPUT
	TPSO	OP AMP OUTPUT
	TPSP	OP AMP INVERTED INPUT
	TRCRS	TRACK CROSS SIGNAL
	TRON	TRACKING ON
	TRSON	TRAVERSE SERVO ON

INITIAL/LOGO		ABBREVIATIONS
V	VBLANK	V BLANKING
	VCC	COLLECTOR POWER SUPPLY VOLTAGE
	VCDCONT	VIDEO CD CONTROL (TRACKING BALANCE)
	VDD	DRAIN POWER SUPPLY VOLTAGE
	VFB	VIDEO FEED BACK
	VREF	VOLTAGE REFERENCE
	VSS	SOURCE POWER SUPPLY VOLTAGE
W	WAIT	BUS CYCLE WAIT
	WDCK	WORD CLOCK
	WEH	WRITE ENABLE HIGH
	WSR	WORD SELECT RECEIVER
X	X	X´ TAL
	XALE	X ADDRESS LATCH ENABLE
	XAREQ	X AUDIO DATA REQUEST
	XCDROM	X CD ROM CHIP SELECT
	XCS	X CHIP SELECT
	XCSYNC	X COMPOSITE SYNC
	XDS	X DATA STROBE
	XHSYNCO	X HORIZONTAL SYNC OUTPUT
	XHINT	XH INTERRUPT REQUEST
	XI	X´ TAL OSCILLATOR INPUT
	XINT	X INTERRUPT
	XMW	X MEMORY WRITE ENABLE
	XO	X´ TAL OSCILLATOR OUTPUT
	XRE	X READ ENABLE
	XSRMCE	X SRAM CHIP ENABLE
	XSRMOE	X SRAM OUTPUT ENABLE
	XSRMWE	X SRAM WRITE ENABLE
	XVCS	X V-DEC CHIP SELECT
	XVDS	X V-DEC CONTROL BUS STROBE
	XVSYNCO	X VERTICAL SYNC OUTPUT

14 VOLTAGE CHART

Note:

- Indicated voltage values are the standard values for the unit measured by the DC electronic circuit tester (high-impedance) with the chassis taken as standard. Therefore, there may exist some errors in the voltage values, depending on the internal impedance of the DC circuit tester.
- Circuit voltage and waveform described herein shall be regarded as reference information when probing defect point, because it may differ from an actual measuring value due to difference of Measuring instrument and its measuring condition and product itself.

14.1. MAIN P.C.B.

Ref No.	IC1001																			
MODE	1	2	3	4	5	6	7	8	9	10	11	12	13	14	15	16	17	18	19	20
PLAY	-	0.6	0.6	0	0	0	-	0	0.8	0.5	0.5	3.3	0	0	1.5	0	2	0	5.7	0.8
STOP	-	0.6	0.6	0	0	0	2.3	0	0.8	0.5	0.5	3.3	0	0	2.4	0	2.4	0	5.7	0.8
Ref No.	IC1001																			
MODE	21	22	23	24	25	26	27	28	29	30	31	32	33	34	35	36	37	38	39	40
PLAY	0.6	0.5	3.2	0.8	0.6	0.5	3.3	0.8	0.5	0.5	3.3	1.3	0	0	9.4	-	-	7.6	8.2	5.2
STOP	0.6	0.5	3.3	0.8	0.6	0.5	3.3	0.8	0.5	0.5	3.3	1.3	0	0	9.4	-	-	7.6	8.2	5.2
Ref No.	IC1001																			
MODE	41	42	43	44	45	46	47	48												
PLAY	9.4	5.7	4	0	9.4	2.3	0	3.3												
STOP	9.4	5.7	5.2	0	9.4	2.3	0	3.3												
Ref No.	IC1003						IC1004						IC1101							
MODE	1	2	3	4	5		1	2	3	4	5		1	2	3	4	5			
PLAY	3.3	0	3.6	-	3.6		5	5	5.3	-	3.3		4.9	0	5.3	-	5.3			
STOP	3.3	0	3.6	-	3.6		5	0	5.3	-	3.3		4.9	0	5.3	-	5.3			
Ref No.	IC1401																			
MODE	1	2	3	4	5	6	7	8	9	10	11	12	13	14						
PLAY	0.2	1.1	1.7	1.5	3	-	0	11.8	0	3	2.5	1.3	1.3	1.3						
STOP	0.2	1.1	1.7	1.5	3	-	0	11.7	0	3	2.5	1.3	1.3	1.3						
Ref No.	IC1402						IC1403													
MODE	1	2	3	4	5		1	2	3	4										
PLAY	11.4	0	3.3	9.4	11		3.3	0.1	-	0										
STOP	11.4	0	3.3	7.8	11		0	0.1	-	0										
Ref No.	IC1601																			
MODE	1	2	3	4	5	6	7	8	9	10	11	12	13	14	15	16				
PLAY	1.3	0.5	5	9.6	0	0.3	1	1	2	1.6	0.1	0.3	0.2	0.2	0	9.1				
STOP	1.3	0.5	5	9.6	0	0.3	1	1	2.2	2.2	0.1	0.3	0.2	0.2	0	9.2				
Ref No.	IC2601																			
MODE	1	2	3	4	5	6	7	8	9	10	11	12	13	14	15	16	17	18	19	20
PLAY	1.7	0	0	3.3	0.1	0	0	0.6	0	5.3	1.2	0	0.7	0.7	0	5.3	3.1	3.1	3.1	3.1
STOP	3.3	0	0	0	1.6	1.6	0	1.6	1.6	5.3	2.4	1.6	0	0	0	5.3	5.3	5.3	5.3	5.3
Ref No.	IC2601																			
MODE	21	22	23	24	25	26	27	28	29	30	31	32	33	34	35	36	37	38	39	40
PLAY	3.1	3.1	0.8	5.3	0	2.7	2.7	5.3	0	2.7	0	0	0	5.3	0	0	1.6	1.6	1.6	1.6
STOP	5.3	5.3	5.3	5.3	0	0.5	0.5	5.3	0	0.5	0	1.6	1.6	5.3	2	1.6	1.6	1.6	1.6	1.6
Ref No.	IC2601																			
MODE	41	42	43	44	45	46	47	48												
PLAY	1.6	1.6	1.6	1.6	1.6	1.6	1.6	1.7												
STOP	1.6	1.6	1.6	1.6	1.6	1.6	1.6	1.6												
Ref No.	IC3001																			
MODE	1	2	3	4	5	6	7	8	9	10	11	12	13	14	15	16	17	18	19	20
PLAY	1.1	1	1.3	1.2	0	3.3	1.6	1.5	1.3	1.1	1.2	0	1.3	1.3	0	-	1.6	1.7	0	1.2
STOP	1.3	1.4	1.4	1.4	0	3.2	1.3	1.3	1.3	1.4	1.3	1.4	1.3	1.4	0	3.2	1.4	1.4	0	1.2
Ref No.	IC3001																			
MODE	21	22	23	24	25	26	27	28	29	30	31	32	33	34	35	36	37	38	39	40
PLAY	1.2	1.8	1.7	0.8	1.2	1.3	1.8	1.6	1.5	0.5	3.3	0	3.3	1.1	1	1.4	1.6	1.6	1.5	1.7
STOP	1.4	2.2	2.2	1.7	1.7	0	0	0	0	0	3.3	0	3.3	2	1	0.8	2	1.4	1	2.3
Ref No.	IC3001																			
MODE	41	42	43	44	45	46	47	48	49	50	51	52	53	54	55	56	57	58	59	60
PLAY	1.9	2	0	1.2	0	3.3	3.3	0	3.3	0	0	3.3	3.1	2.8	2.9	0	0	0	0	0
STOP	2.2	2.7	0	1.2	0	3.3	3.3	0	0	3.3	0	3.3	3.1	2.7	3	0	0	0	0	0
Ref No.	IC3001																			
MODE	61	62	63	64	65	66	67	68	69	70	71	72	73	74	75	76	77	78	79	80
PLAY	1.6	0	0	3	0.1	1.8	1.2	0	3.3	3.3	1.7	0	3.3	1.3	1.2	1.2	0	1.6	1.1	1.1
STOP	1.6	0	0	2.9	3.3	1.7	1.6	0	3.3	3.3	3.3	3.3	3.3	1.3	1.3	1.3	1.2	1.8	1.2	0.9
Ref No.	IC3001																			
MODE	81	82	83	84	85	86	87	88	89	90	91	92	93	94	95	96	97	98	99	100
PLAY	2.2	0	12	3.3	0.8	2.6	0	1.8	0	0.5	1.7	3.3	1.4	1.4	1.8	1.8	1.6	1.6	1.6	1.6
STOP	1	0	1.2	3.3	0.8	2.3	0	1.8	0	0.6	1.7	3.3	1.5	1.5	1.8	1.8	1.6	1.6	1.6	1.6
Ref No.	IC3001																			
MODE	101	102	103	104	105	106	107	108	109	110	111	112	113	114	115	116	117	118	119	120
PLAY	0	0	0	0	0.2	1.1	3.3	0	2.2	1.6	2.6	2.6	2.6	2.6	2.7	2.6	2.4	2.4	2.4	2.5
STOP	0	0	0	0	0	0	3.3	0	2.2	1.6	2.2	2.2	2.2	2.2	2.2	2.2	2.2	2.2	2.2	2.2
Ref No.	IC3001																			
MODE	121	122	123	124	125	126	127	128	129	130	131	132	133	134	135	136	137	138	139	140
PLAY	1.8	1.6	1.6	1.6	0	1.6	1.8	3.3	1.5	1.4	1.5	3.3	3.3	1	0	3.3	0	0	1.5	0
STOP	1.9	1.6	1.6	1.6	0	1.6	1.6	3.3	1.4	1.4	1.4	3.3	3.3	1	0	3.3	0	0	1.3	0
Ref No.	IC3001																			
MODE	141	142	143	144	145	146	147	148	149	150	151	152	153	154	155	156	157	158	159	160
PLAY	3.3	3.3	0	1.6	0	1.6	3.1	0	0	0	0	0	0	3.3	1.5	1.5	0	1.2	2.9	3
STOP	3.3	3.3	0	1.6	0	1.6	3.1	0	0	0	3.3	0	0	3.3	1.5	1.5	0	1.2	3	3.1
Ref No.	IC3001																			
MODE	161	162	163	164	165	166	167	168	169	170	171	172	173	174	175	176	177	178	179	180
PLAY	3	3	3	2.9	0	3.3	3	3	3	3	3	3	0	3.3	3.2	2.9	3	3	2.8	2.7
STOP	2.9	3.1	3	3.1	0	3.3	3.1	3.1	3	3.1	3	3.1	0	3.3	3	3	3.1	2.8	2.9	2.9
Ref No.	IC3001																			
MODE	181	182	183	184	185	186	187	188	189	190	191	192	193	194	195	196	197	198	199	200
PLAY	3.1	0	1.5	3.2	1.5	0	1.2	3.1	3.1	3	3.2	0	1.7	0	0	3.1	1.7	0	0	1.4
STOP	3.2	0	1.4	3.3	1.5	0	1.2	3.2	3.2	3.1	3.2	0	2.8	0	0	3.3	1.4	0	0	1.5
Ref No.	IC3001																			
MODE	201	202	203	204	205	206	207	208	209	210	211	212	213	214	215	216				
PLAY	0	3.2	0.4	0	3.2	1.4	0.2	1.3	1.3	0	1.2	1.7	1.3	1.4	1.2	1				
STOP	0	1.6	0	0	3.3	1.6	0	1.6	1	0	1.2	0	3.3	3.3	0	0				
Ref No.	IC3002									IC3006					IC3007					
MODE	1	2	3	4	5	6	7	8		1	2	3	4		1	2	3			
PLAY	0	0	0	0	3.3	3.3	0	3.3		3.2	1.2	0	0		0	3.3	3.3			
STOP	0	0	0	0	3.3	3.3	0	3.3		3.3	1.2	0	0		0	3.3	3.3			
Ref No.	IC3008																			
MODE	1	2	3	4	5	6	7	8	9	10	11	12	13	14	15	16	17	18	19	20
PLAY	1.8	1.6	0.8	1.3	1.4	1.7	1.5	1.4	1	0	3.3	3.3	3.3	3.3	1.6	1.1	1	1.4	1.6	1.6
STOP	0	0	0	0	0	0	0	0	0	0	3.3	3.3	3.3	3.3	1.6	0	0	0	0	0
Ref No.	IC3008																			
MODE	21	22	23	24	25	26	27	28	29	30	31	32	33	34	35	36	37	38	39	40
PLAY	1.5	1.7	1.9	2	2	1.2	0	1.3	1.2	1.1	1.2	1.1	1.3	1.3	1.6	1.5	3.3	1.3	1.2	1.3
STOP	0	0	0	0	0	3.3	0	0	1.5	1.5	1.5	1.5	1.5	1.5	1.5	1.5	3.3	1.5	1.5	1.
Ref No.	IC3008																			
MODE	41	42	43	44	45	46	47	48												
PLAY	1.3	1.3	1.4	1.6	1.6	0	3.3	1.3												
STOP	1.5	1.5	1.5	1.5	1.5	0	3.3	0												

Ref No.	IC3009																			
MODE	1	2	3	4	5	6	7	8	9	10	11	12	13	14	15	16	17	18	19	20
PLAY	3.3	3	3.3	3	3	0	3	3	3.3	3	3	0	2.9	3.3	2.8	3.3	3.3	3.2	3.1	1.7
STOP	3.3	3.1	3.3	3	3.1	0	3.1	3.1	3.3	3.1	3	0	2.8	3.3	2.9	3.2	3.2	3.2	3.1	2.7
Ref No.	IC3009																			
MODE	21	22	23	24	25	26	27	28	29	30	31	32	33	34	35	36	37	38	39	40
PLAY	1.8	0	0.1	0.4	0.4	1.4	3.3	0	1.4	1.8	1.6	1.4	0	0	0	-	3.3	1.5	2.8	-
STOP	1.5	0	0	0.1	0.1	1	3.3	0	1.5	1.6	1.6	1.5	0	0	0	-	3.3	1.5	2.9	-
Ref No.	IC3009																			
MODE	41	42	43	44	45	46	47	48	49	50	51	52	53	54						
PLAY	0	3	3.3	3	3	0	3	3	3.3	3	3	0	2.9	0						
STOP	0	3.1	3.3	3	3.3	0	3	3.1	3.3	3	2.9	0	3	0						
Ref No.	IC3201																			
MODE	1	2	3	4	5	6	7	8												
PLAY	0	3.3	0	0	0	0	0	0												
STOP	0	3.3	0	0	0	0	0	0												
Ref No.	IC4004																			
MODE	1	2	3	4	5	6	7	8	9	10	11	12	13	14	15	16				
PLAY	1.7	2.5	1.6	2.4	1.6	0	0	0	0.1	4.9	2.5	1.6	1.6	1.6	2.5	4.9				
STOP	2.1	2.5	1.6	2.5	1.6	0	0	0	0.1	4.9	2.5	2	1.6	1.6	2.5	5				
Ref No.	IC4005									IC4006										
MODE	1	2	3	4	5	6	7	8		1	2	3	4	5	6	7	8			
PLAY	4.3	4.3	4.3	0	4.3	4.3	4.3	8.6		-	4.3	4.3	2.5	4.3	0	8.6	4.3			
STOP	4.3	4.3	4.3	0	4.3	4.3	4.3	8.6		-	4.3	4.3	2.2	4.3	0	8.6	4.3			
Ref No.	IC4007																			
MODE	1	2	3	4	5															
PLAY	3.3	0	3.6	-	3.6															
STOP	3.3	0	3.6	-	3.6															
Ref No.	IC4008																			
MODE	1	2	3	4	5	6	7	8	9	10	11	12	13	14	15	16	17	18	19	20
PLAY	0	0	3.3	3.3	0	3.3	0.8	0	1.7	1.7	0	1.7	1.7	0	1.7	3.3	1.6	1.6	1.7	0
STOP	0	0	3.3	3.3	0	3.3	0.2	0	1.7	1.7	0	1.7	1.7	0	1.7	3.3	1.6	1.7	1.7	0
Ref No.	IC4008																			
MODE	21	22	23	24	25	26	27	28												
PLAY	0	1.5	0	1.7	1.7	1.6	3.3	1.7												
STOP	0	1.5	0	1.7	1.7	1.6	3.3	1.7												
Ref No.	IC4009									IC5201										
MODE	1	2	3	4	5	6	7	8		1	2	3	4	5	6	7	8			
PLAY	2.5	2.5	2.5	0	4.3	4.3	4.3	8.6		0	0	0	0	0	0.2	0	3.3			
STOP	2.5	2.5	2.5	0	4.3	4.3	4.3	8.6		0	0	0	0	0	0	0	3.3			
Ref No.	IC6001																			
MODE	1	2	3	4	5	6	7	8	9	10	11	12	13	14	15	16	17	18	19	20
PLAY	0	3	0.3	0	3.3	3.3	3.3	1.6	3.3	3.3	3.3	1.6	1.6	0	0	3.3	0	3.3	3.3	1.5
STOP	0	3.3	0.3	0.1	3.3	3.3	3.3	1.6	3.3	3.3	3.3	1.7	1.6	0	0	3.3	0	3.3	3.3	1.5
Ref No.	IC6001																			
MODE	21	22	23	24	25	26	27	28	29	30	31	32	33	34	35	36	37	38	39	40
PLAY	3.3	0	1.4	3.3	3.3	1	3.3	0	0	3.3	3.3	0	3.3	2.9	0	3.3	3.3	3.3	3.1	2.7
STOP	3.3	0	1.5	3.3	3.3	1	3.3	0	0	3.3	3.3	0	3.3	2.9	0	3.3	3.3	3.3	3.3	2.7
Ref No.	IC6001																			
MODE	41	42	43	44	45	46	47	48	49	50	51	52	53	54	55	56	57	58	59	60
PLAY	2.9	1.5	3.3	3.3	0.1	3.3	3.3	3.3	3.3	3.3	3.3	3.3	0	0	0	3.3	0	3.3	3.3	2.5
STOP	3	1.5	3.3	3.3	0.1	3.3	3.3	3.3	3.3	3.3	3.3	3.3	0	0	0	3.3	0	3.3	3.3	2.2
Ref No.	IC6001																			
MODE	61	62	63	64	65	66	67	68	69	70	71	72	73	74	75	76	77	78	79	80
PLAY	3.3	0	0	0	3.3	3.3	3.3	3.3	3.3	0	3.3	0	0	0	3.3	0	0	3.3	3.3	3.3
STOP	3.3	0	0	0	3.3	3.3	3.3	3.3	3.3	0	3.3	0	0	0	3.3	0	0	3.3	3.3	3.3
Ref No.	IC6002									IC6003						IC6007				
MODE	1	2	3	4	5	6	7	8		1	2	3	4	5		1	2	3	4	5
PLAY	0	0	0	0	3.3	3.3	0	3.3		0.8	0.8	0	0.8	3.3		3.3	3.3	0	-	-
STOP	0	0	0	0	3.3	3.3	0	3.3		1	1	0	1	3.3		3.3	3.3	0	-	-
Ref No.	IC8801																			
MODE	1	2	3	4	5															
PLAY	3.6	0	3.6	-	3.3															
STOP	3.6	0	3.6	-	3.3															
Ref No.	IC8803																			
MODE	1	2	3	4	5	6	7	8	9	10	11	12	13	14	15	16	17	18	19	20
PLAY	0	0	0	0	0	2.5	0.1	0	1.2	1.2	0	4.9	2.5	0	1.6	1.2	1.2	1.3	1.3	1.8
STOP	0	0	0	0	0	2.5	0.1	0	1.1	1.1	0	4.9	2.5	0	1.6	1.3	1.3	1.3	1.2	1.8
Ref No.	IC8803																			
MODE	21	22	23	24	25	26	27	28	29	30	31	32	33	34	35	36	37	38	39	40
PLAY	1.2	0.9	1	0	4.9	2.6	1.2	4.9	2.6	1.2	4.9	1.2	2.1	2.1	1.2	2.1	2.2	0	4.9	3.3
STOP	1.2	0.9	1	0	4.9	2.6	1.2	4.9	2.6	1.2	4.9	1.2	2.2	2.2	1.2	2.1	2.2	0	4.9	3.3
Ref No.	IC8803																			
MODE	41	42	43	44	45	46	47	48	49	50	51	52	53	54	55	56	57	58	59	60
PLAY	3.3	3.3	0.9	0.3	0.9	0.2	0	1.4	3.3	3.3	4.9	0	1.7	0	0.2	3.3	0.2	0.2	0	3.3
STOP	3.3	3.3	0.9	0.3	0.8	0.2	0	1.4	3.3	3.3	4.9	0	1.7	0	0.2	3.3	0.2	0.2	0	3.3
Ref No.	IC8803																			
MODE	61	62	63	64	65	66	67	68	69	70	71	72	73	74	75	76	77	78	79	80
PLAY	0	0	0	0	0	0	0	0	0	0	0	0	0	0	0	3.3	0	3.3	1.1	2.5
STOP	0	0	0	0	0	0	0	0	0	0	0	0	0	0	0	3.3	0	3.3	1.1	2.5
Ref No.	IC8803																			
MODE	81	82	83	84	85	86	87	88	89	90	91	92	93	94	95	96	97	98	99	100
PLAY	0	0	2.5	0	0	0.1	4.9	0.1	0	0	0	0.4	0.2	4.9	2.7	2.4	0.5	0	0	2.5
STOP	0	0	2.5	0	0	0	4.9	0	0	0	0	0.4	0.2	4.9	2.7	2.4	0.5	0	0	2.5
Ref No.	IC8804									IC8805										
MODE	1	2	3	4	5	6	7	8		1	2	3	4	5	6	7	8			
PLAY	0.2	0.9	3.3	0	0.3	0.9	3.3	3.3		1.9	1.6	1.6	10.1	0	0	7.4	7.6			
STOP	0.2	0.9	3.3	0	0.3	0.9	3.3	3.3		1.9	1.6	1.6	-10.1	0	0	7.4	7.6			
Ref No.	Q1001									Q1002						Q1003				
MODE	1	2	3	4	5	6		1	2	3	4	5	6		E	C	B			
PLAY	9.3	5.3	4	9.4	5.3	5.3		3.6	3.6	5.7	9.4	3.6	3.6		9.4	1.2	8.2			
STOP	5.4	5.4	5.2	9.4	5.4	5.4		3.6	3.6	5.7	9.4	3.6	3.6		9.4	1.2	8	0.2		
Ref No.	Q1004				Q1101				Q1401											
MODE	E	C	B		1	2	3		1	2	3	4	5	6						
PLAY	0	1.2	7.6		1.3	0	8.7		3.3	3.3	9.4	11.1	3.3	3.3						
STOP	0	1.2	7.6		2.3	0	8.7		3.3	3.3	7.7	11	3.3	3.3						
Ref No.	Q1402							Q1403												
MODE	1	2	3	4	5	6		1	2	3	4	5	6	7	8					
PLAY	11.8	6.5	6.1	0	6.5	6.1		11.7	11.7	11.7	6.1	9.6	9.6	9.6	9.6					
STOP	11.7	6.5	6.1	0	6.5	6.1		11.7	11.7	11.7	6.1	9.6	9.6	9.6	9.6					
Ref No.	Q1404							Q1412				Q1622				Q1623				
MODE	1	2	3	4	5	6		E	C	B		E	C	B		E	C	B		
PLAY	0.1	0.1	9.5	9.4	0.1	0.1		11.8	11.7	11.1		0	0	5		9.6	0.1	9.2		
STOP	0.1	0.1	9.5	9.4	0.1	0.1		11.8	11.7	11.1		0	0	5		9.6	0.1	9.2		
Ref No.	Q1624				Q1625				Q3201				Q4001				Q4003			
MODE	E	C	B		E	C	B		E	C	B		E	C	B		E	C	B	
PLAY	0	0	5		0	0	0		0	0	-2.3		8.6	9.3	9.3		9.4	9.3	8.6	
STOP	0	0	5		0	0	0		0	0	-1.9		8.6	9.3	9.3		9.4	9.3	8.6	

Ref No.	Q5201				Q5202				Q5211				Q5215				Q8802			
MODE	E	C	B		E	C	B		1	2	3		1	2	3		E	C	B	
PLAY	0	4.9	0		0.4	3.7	1.1		4.9	4.9	0.8		3.7	4.3	2.2		4.9	2.5	2.6	
STOP	0	4.9	0		0	5	0		4.9	4.9	0		4.9	4.9	0		4.9	2.5	2.6	
Ref No.	Q8804							Q8805												
MODE	1	2	3	4	5	6		1	2	3	4	5	6							
PLAY	7.6	1.9	2.5	-10.1	1.9	1.3		7.4	1.3	1.9	-9.9	2.5	1.9							
STOP	7.6	1.9	2.5	-10.1	1.9	1.3		7.4	1.3	1.9	-9.9	2.5	1.9							
Ref No.	QR1001				QR1002				QR1411											
MODE	E	C	B		E	C	B		1	2	3	4	5	6						
PLAY	0	2.9	0		0	2.9	0.7		5.1	0.2	0.1	3	0	11.8						
STOP	0	2.9	0		0	2.9	0.7		5.1	0.2	0.1	3	0	11.8						
Ref No.	QR1413				QR1602				QR1603				QR1604				QR3201			
MODE	E	C	B		E	C	B		E	C	B		E	C	B		E	C	B	
PLAY	0.1	0	0.1		0	1.3	0		0	5	0		0	5	0		5	-1.8	5	
STOP	0.1	0	0.1		0	1.3	0		0	5	0		0	5	0		5	-3.1	5	
Ref No.	QR3202				QR4002				QR4003				QR4004				QR4005			
MODE	E	C	B		E	C	B		E	C	B		E	C	B		E	C	B	
PLAY	0	5	0.1		2.9	-2.2	2.9		2.9	-1.7	2.9		2.9	-1.7	2.9		2.9	-2.1	3.3	
STOP	0	5	0.1		2.5	2.4	0		2.5	2.5	0.1		2.5	2.5	0.1		2.5	2.4	3.3	
Ref No.	QR4006				QR4010				QR4011				QR4014				QR4015			
MODE	E	C	B		E	C	B		E	C	B		E	C	B		E	C	B	
PLAY	0	0	0.1		0	2.9	0		0	0	2.9		0	0.8	0		0	2.9	0	
STOP	0	0.1	2.8		0	0.1	3		0	0	2.8		0	0	2.8		0	0.1	3.3	
Ref No.	QR4021				QR4022								QR4023							
MODE	E	C	B		1	2	3	4	5	6		1	2	3	4	5	6			
PLAY	0	5	0		0	-2.4	0	0	-2.4	0		0	-2.4	0	0	-2.4	0			
STOP	0	5	0		0	0.7	0	0	0.7	0		0	0.7	0	0	0.7	0			
Ref No.	QR4024				QR5221				QR6001				QR8801				QR8802			
MODE	E	C	B		E	C	B		E	C	B		E	C	B		E	C	B	
PLAY	0	0	3.3		3.3	3.3	0.1		0	0.1	3.3		0	3.3	0.1		0	3.3	0	
STOP	0	0	3.3		3.3	2.4	3.3		0	0.1	3.3		0	0.1	3.3		0	0	3.3	
Ref No.	QR8803				QR8808				QR8812				QR8813							
MODE	E	C	B		E	C	B		E	C	B		E	C	B					
PLAY	3.3	3.3	0		4.9	4.8	0.1		4.9	0	4.8		0	0	3.3					
STOP	3.3	3.3	0		4.9	4.8	0.1		4.9	4.8	0		0	0	3.3					

15 BLOCK DIAGRAM

NOTE

Circuit voltage and waveform described herein shall be regarded as reference information when probing defect point, because it may differ from an actual measuring value due to difference of Measuring instrument and its measuring condition and product itself.

15.1. OVERALL BLOCK DIAGRAM

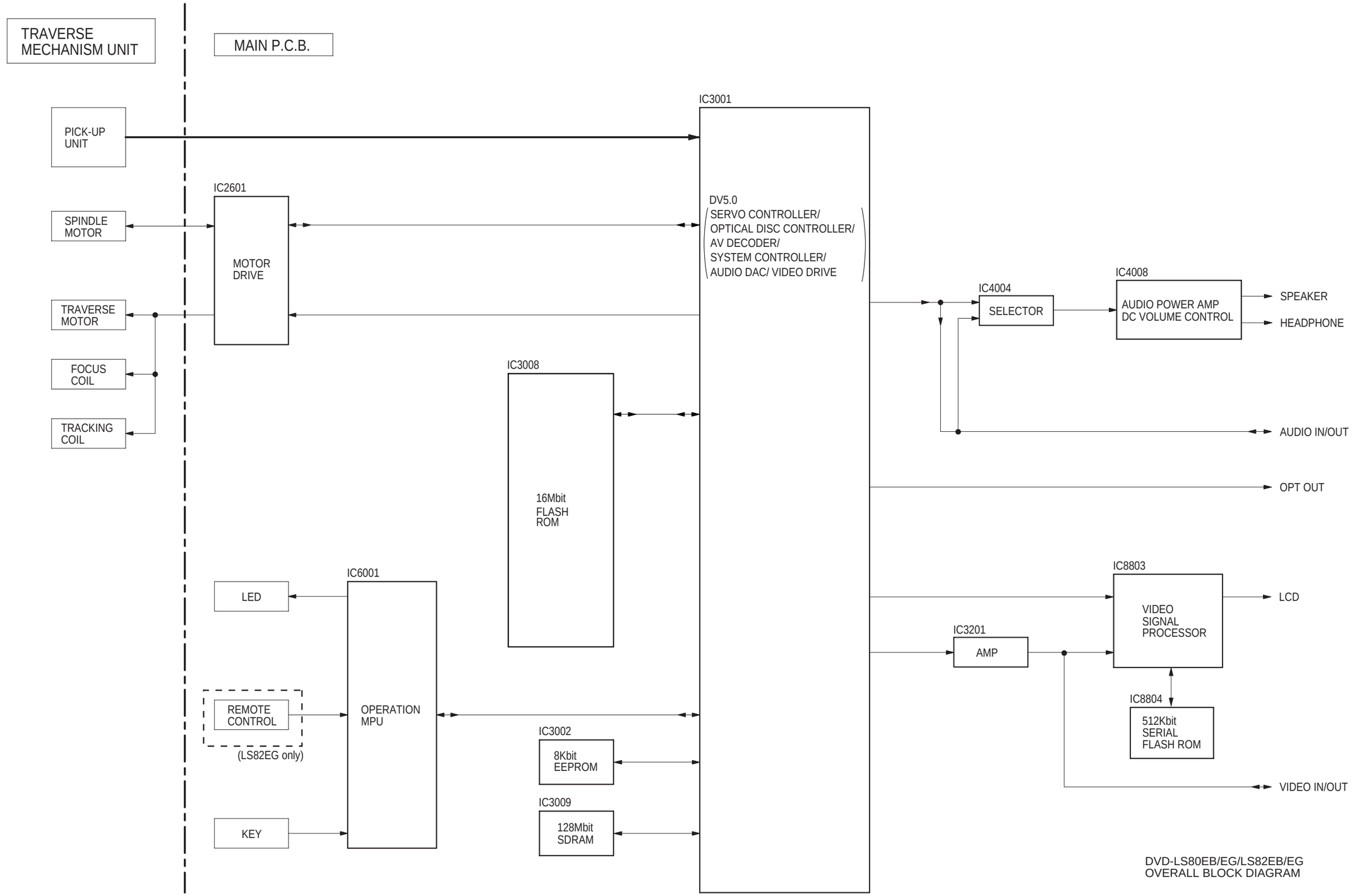

DVD-LS80EB/EG/LS82EB/EG
OVERALL BLOCK DIAGRAM

15.2. POWER SUPPLY BLOCK DIAGRAM

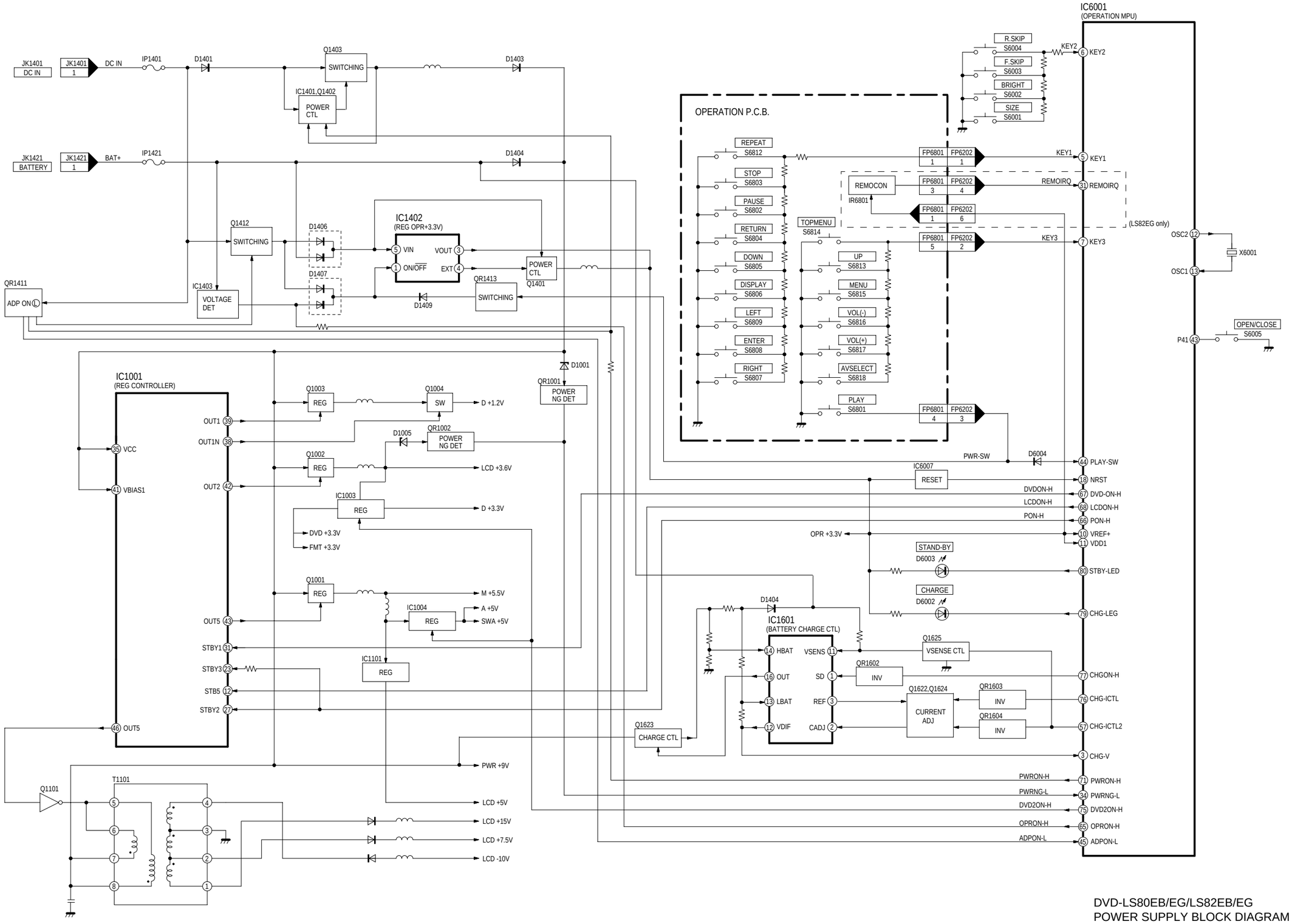

DVD-LS80EB/EG/LS82EB/EG
POWER SUPPLY BLOCK DIAGRAM

15.3. SERVO BLOCK DIAGRAM

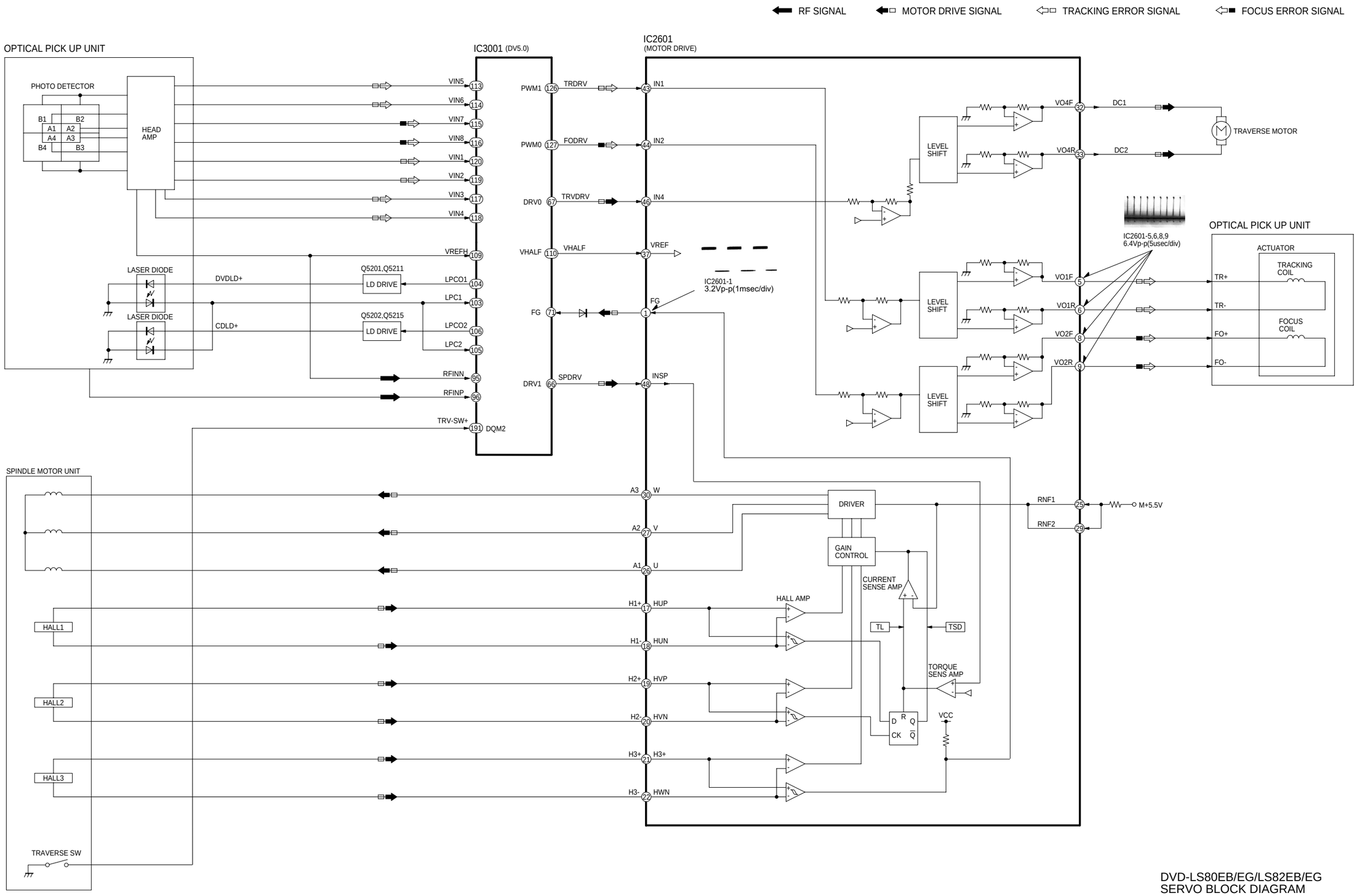

DVD-LS80EB/EG/LS82EB/EG
SERVO BLOCK DIAGRAM

15.4. AUDIO BLOCK DIAGRAM

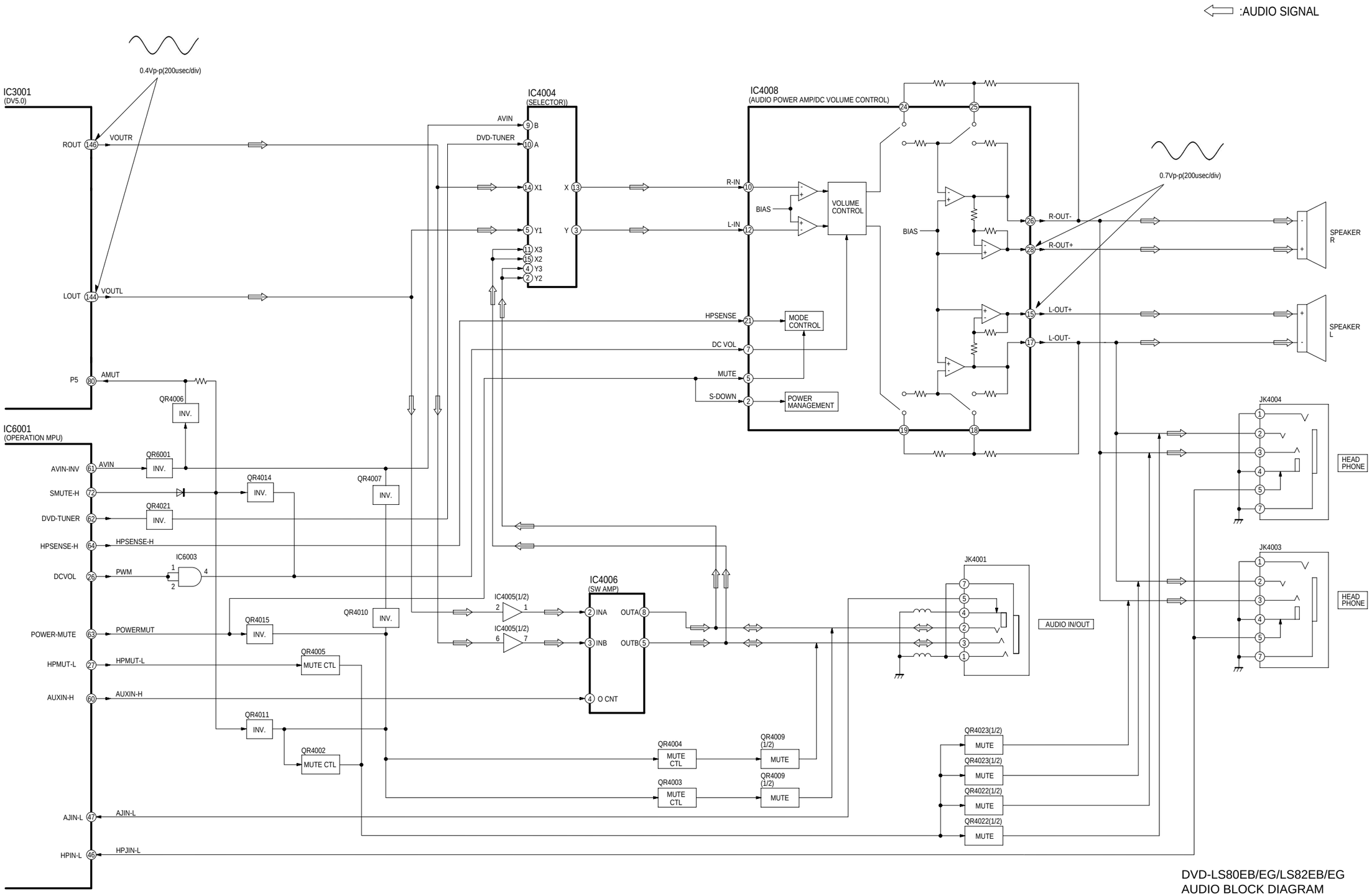

DVD-LS80EB/EG/LS82EB/EG
AUDIO BLOCK DIAGRAM

15.5. VIDEO BLOCK DIAGRAM

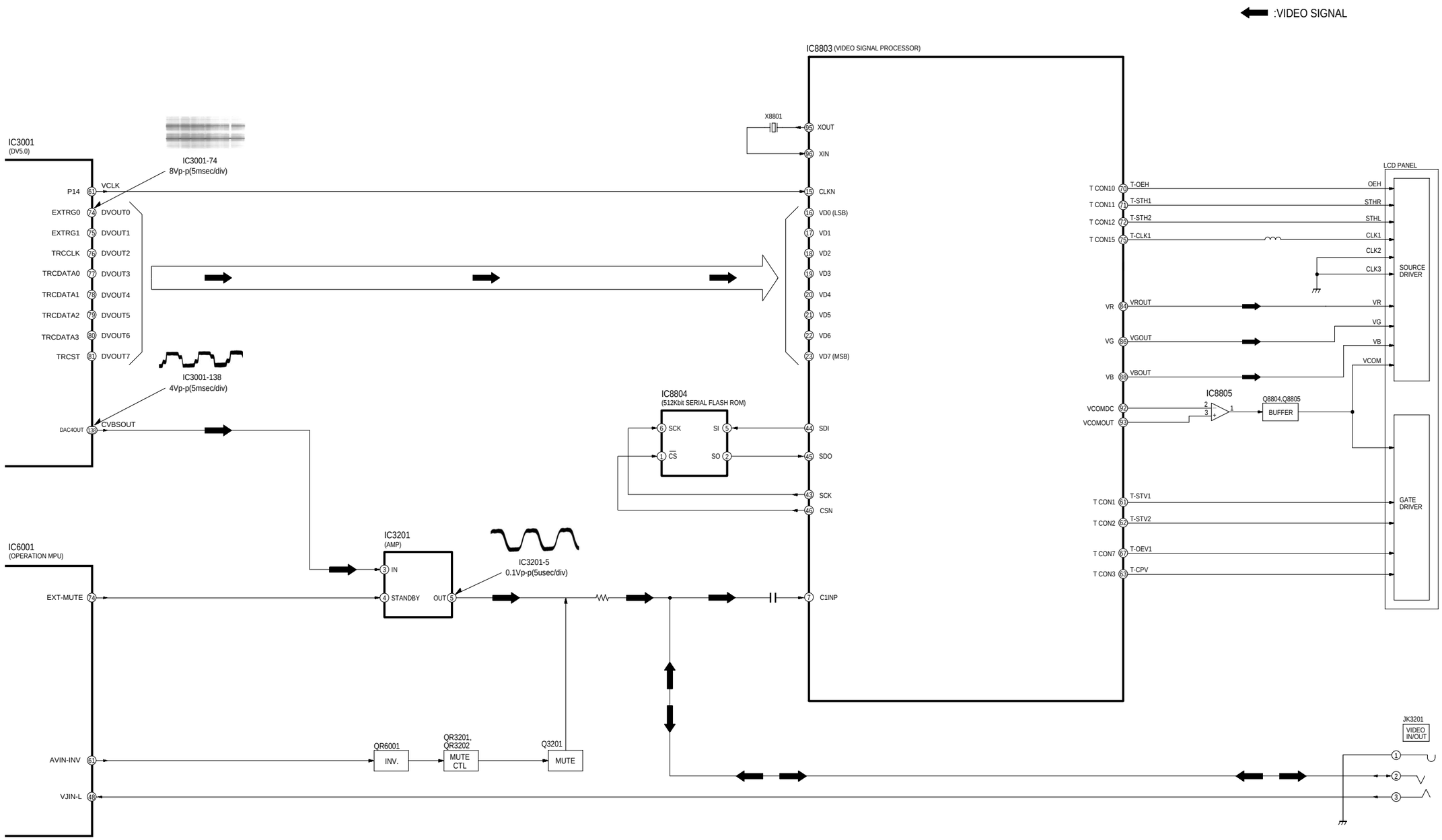

DVD-LS80EB/EG/LS82EB/EG
VIDEO BLOCK DIAGRAM

16 INTERCONNECTION SCHEMATIC DIAGRAM & SCHEMATIC DIAGRAM NOTES

16.1. INTERCONNECTION SCHEMATIC DIAGRAM

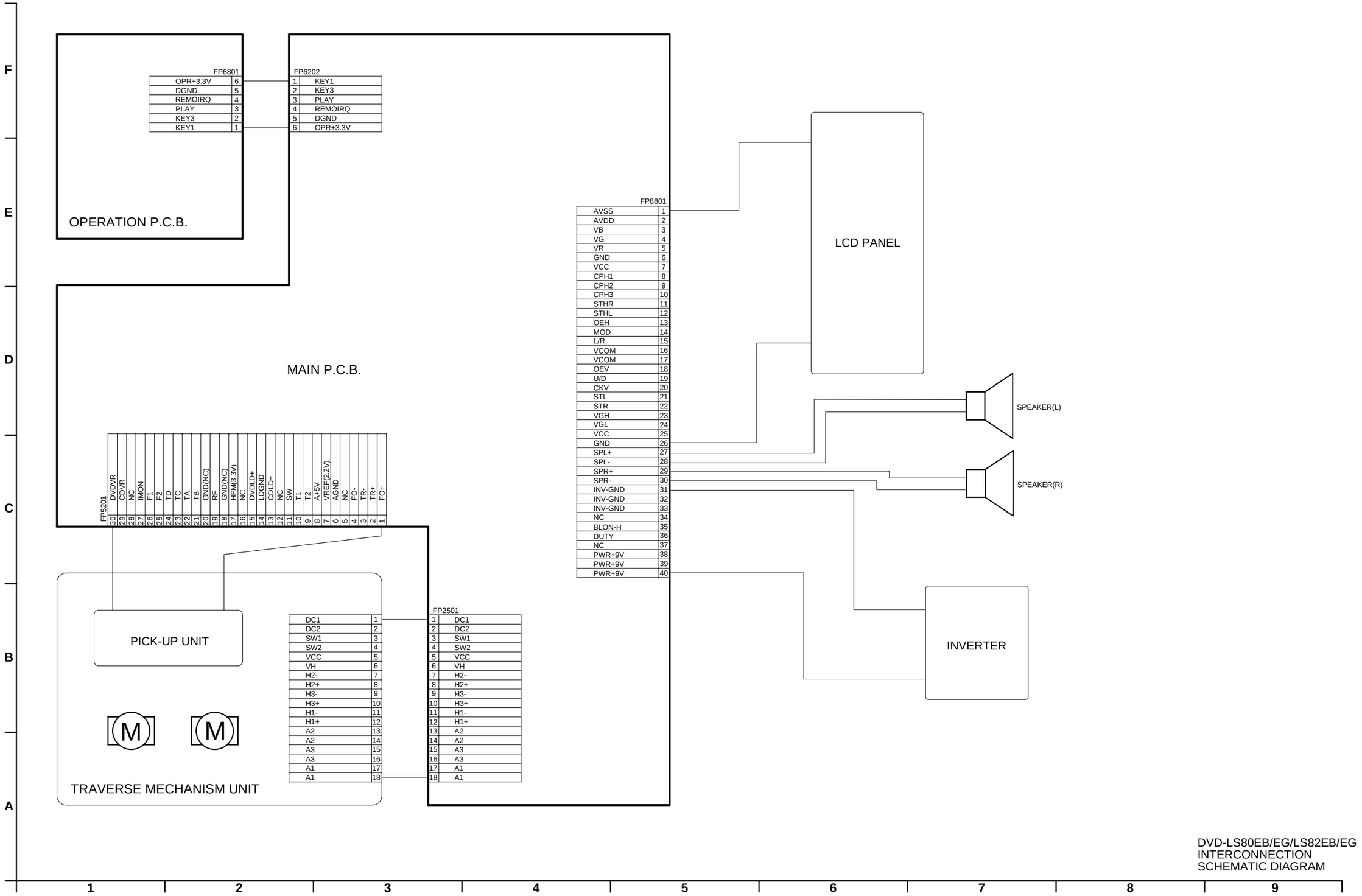

16.2. SCHEMATIC DIAGRAM NOTES

This schematic diagram may be modified at any time with the development of new technology.

Important safety notice:

Components identified by ⚠ mark have special characteristics important for safety.

Furthermore, special parts which have purpose of fire-retardant (resistors), high-quality sound (capacitors), low-noise (resistors), etc. are used. When replacing any of components, be sure to use only manufacture´s specified parts shown in the parts list.

Important safety notice:

There are special components used in this equipment which are important for safety.

These parts are marked by ⚠ in the schematic diagrams. It is essential that these critical parts should be replaced with manufacturer's specified parts to prevent shock, fire, or other hazards. Do not modify the original design without permission of manufacturer.

Caution!

IC and LSI are sensitive to static electricity.

Secondary trouble can be prevented by taking care during repair.

Cover the parts boxes made of plastics with aluminum foil.

Ground the soldering iron.

Put a conductive mat on the work table.

Do not touch the legs of IC or LSI with the fingers directly.

17 SCHEMATIC DIAGRAM

17.1. CHARGE BATTERY SECTION (MAIN P.C.B. (1/9)) SCHEMATIC DIAGRAM

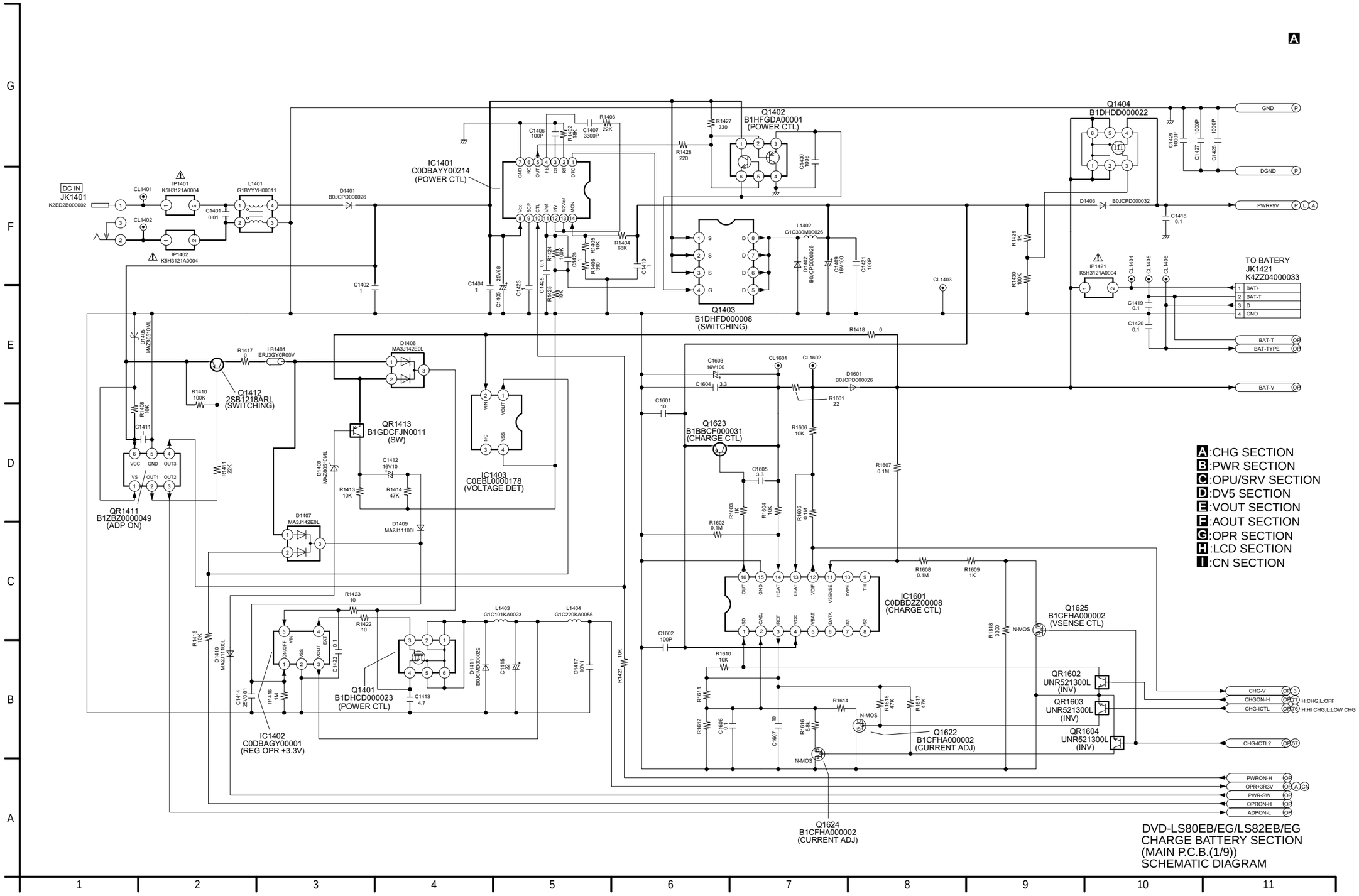

17.2. POWER SUPPLY SECTION (MAIN P.C.B. (2/9)) SCHEMATIC DIAGRAM

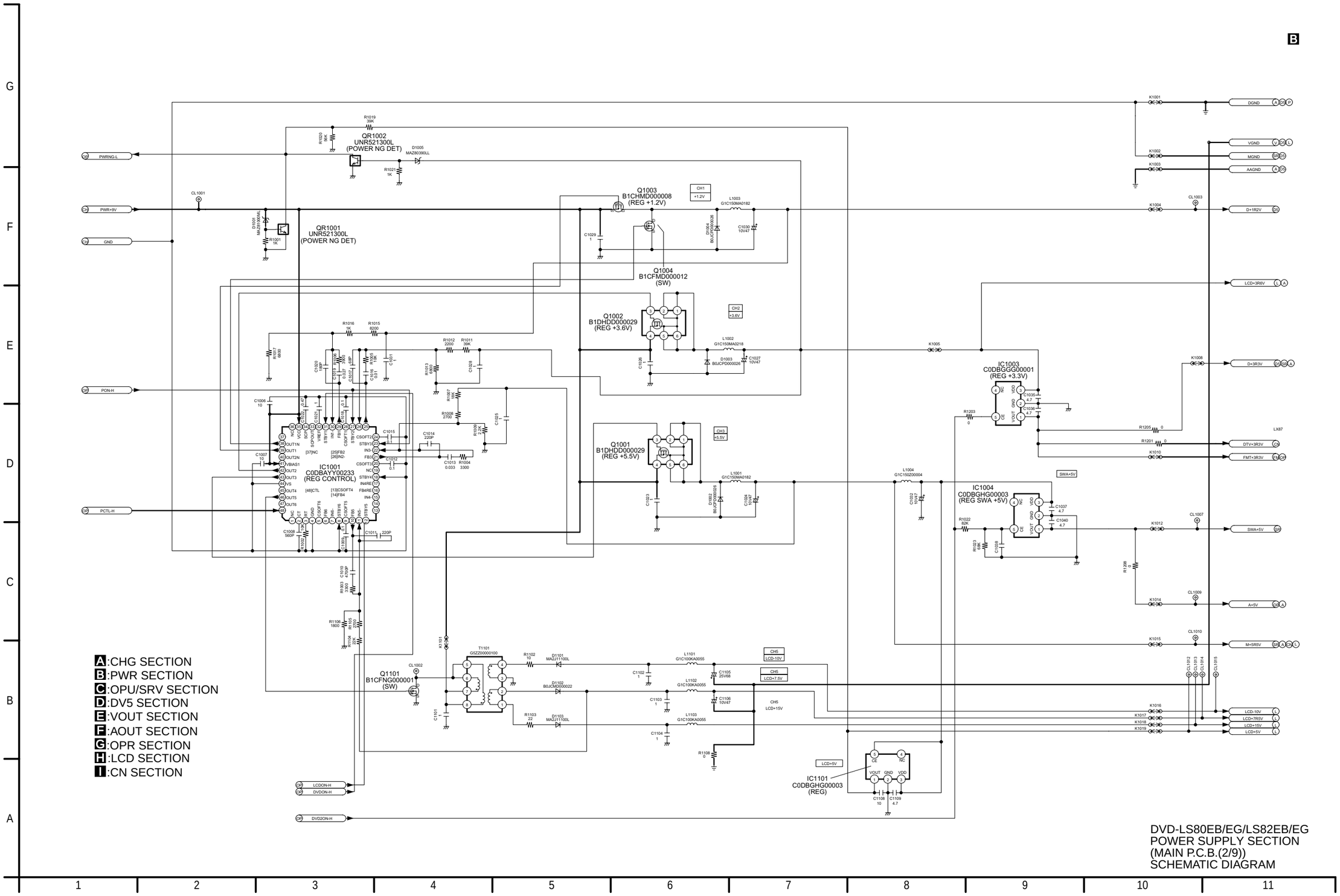

17.3. OPTICAL PICK UP/SERVO SECTION (MAIN P.C.B. (3/9)) SCHEMATIC DIAGRAM

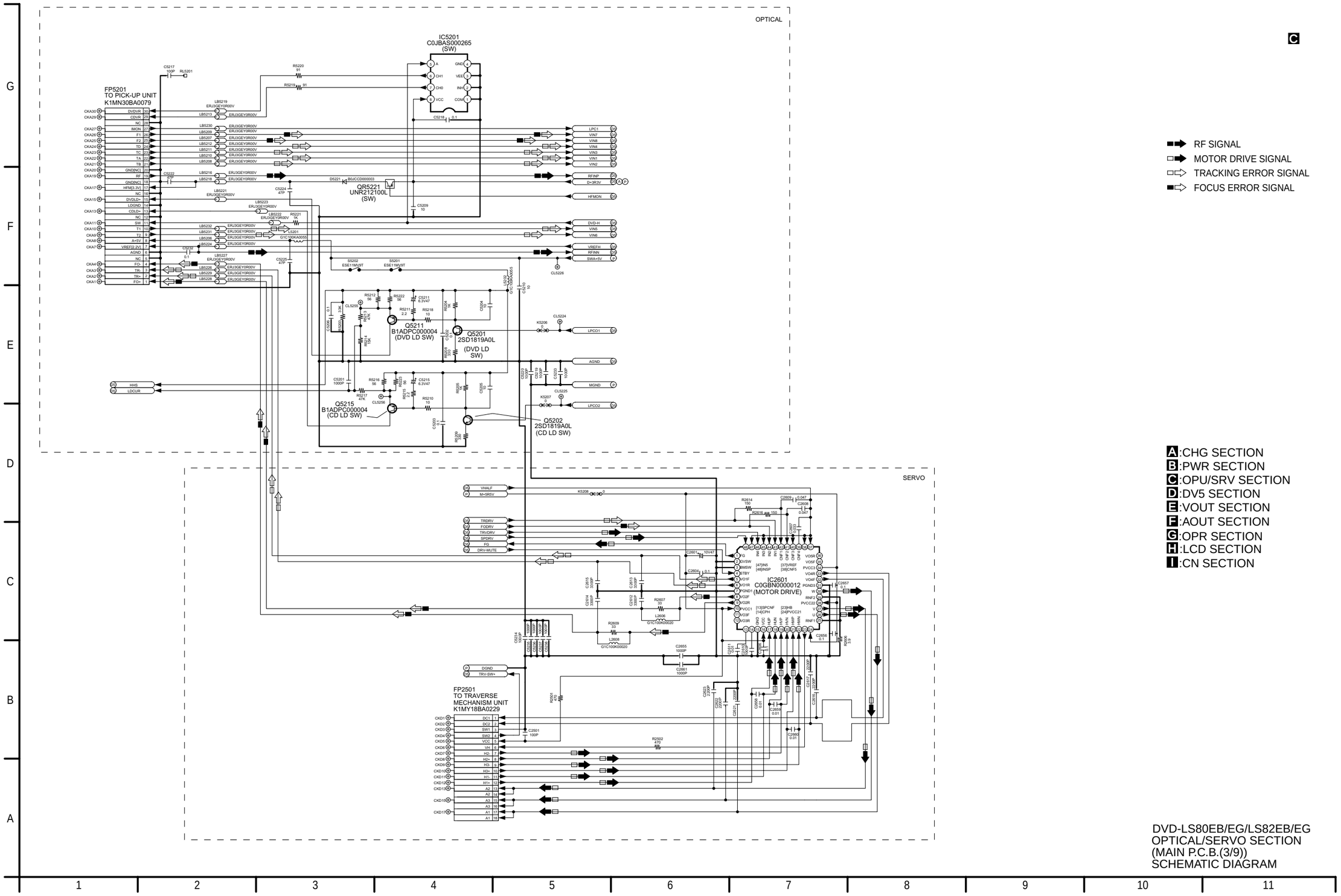

17.4. DV5 SECTION (MAIN P.C.B. (4/9)) SCHEMATIC DIAGRAM

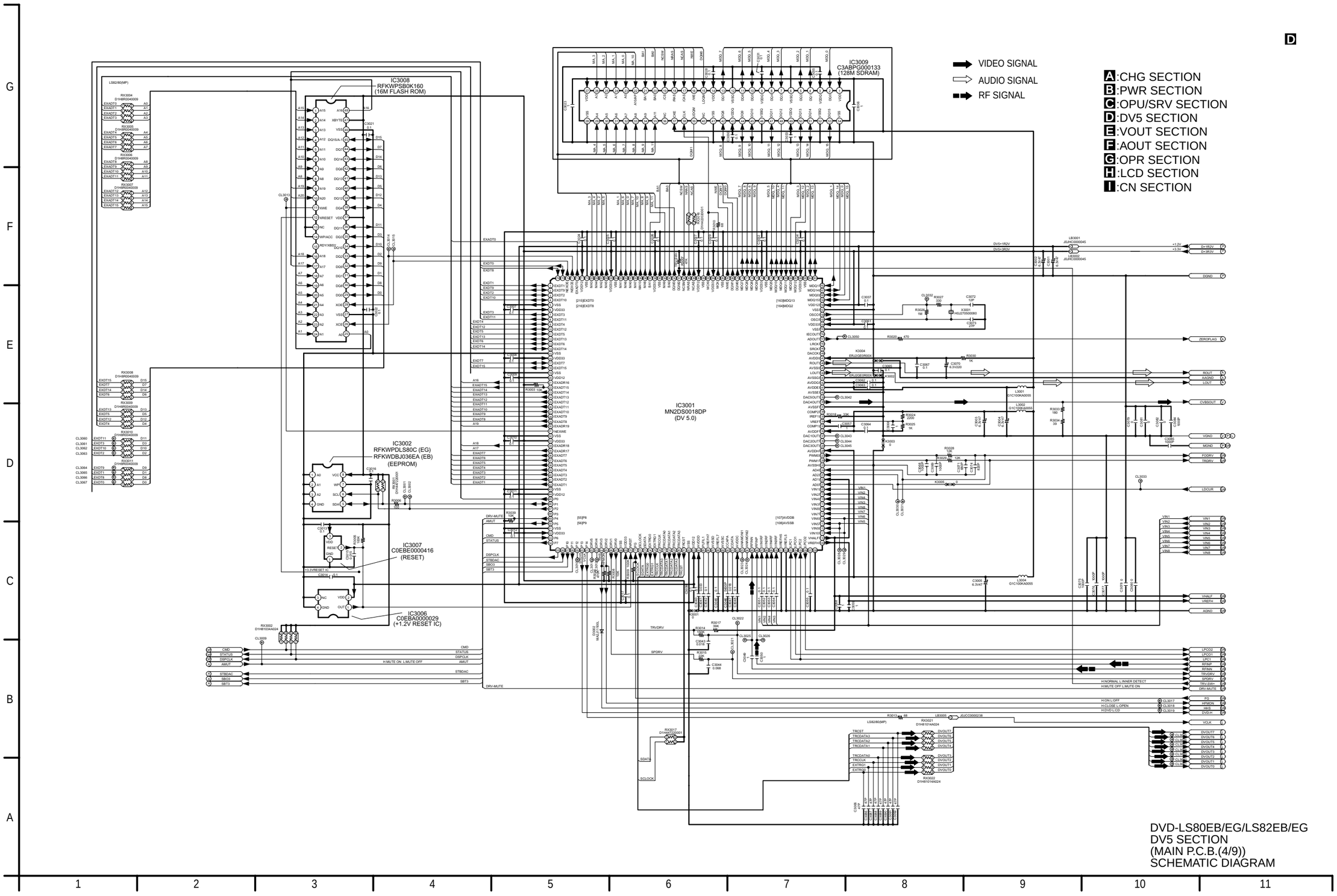

17.5. VIDEO OUT SECTION (MAIN P.C.B. (5/9)) SCHEMATIC DIAGRAM

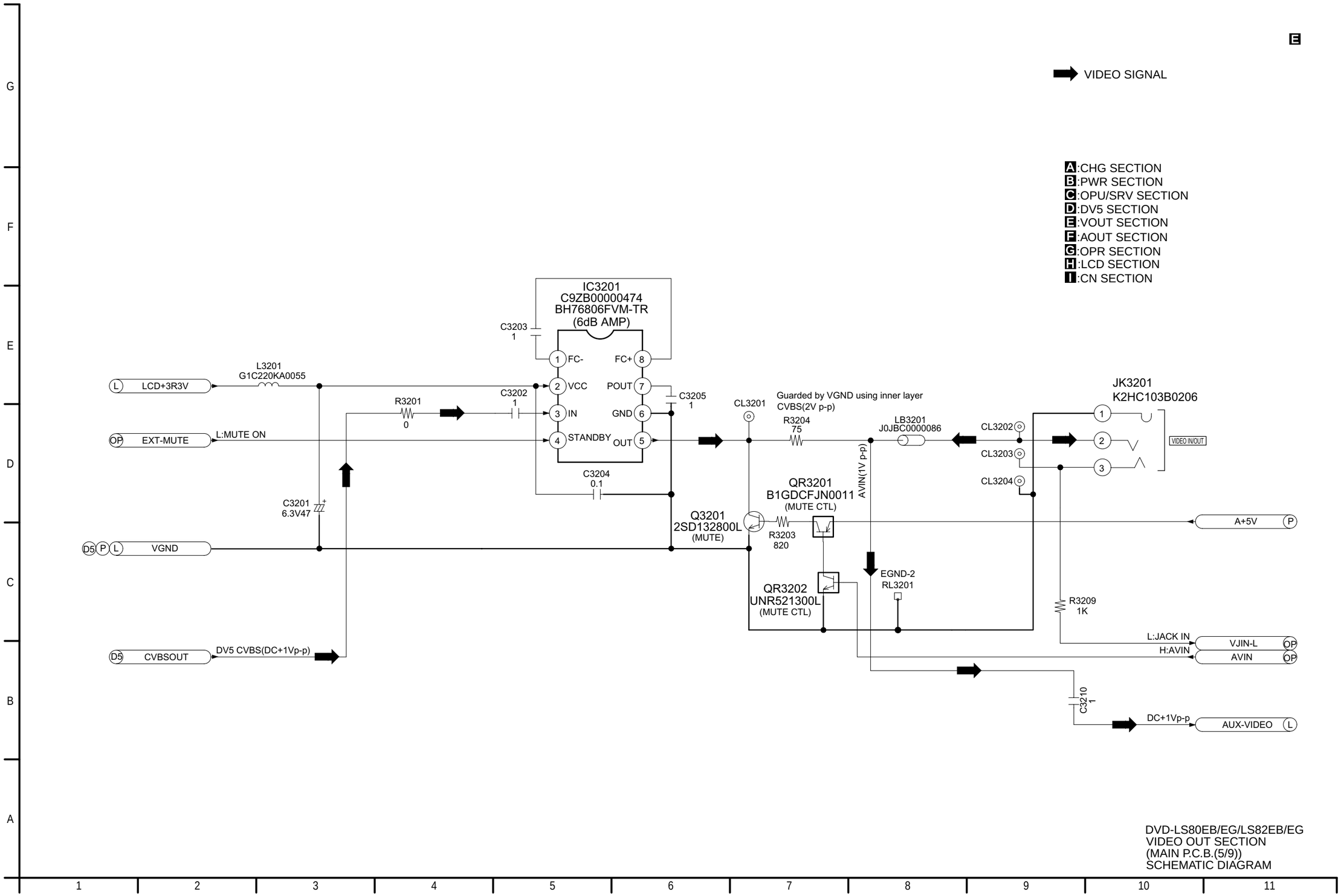

17.6. AUDIO OUT SECTION (MAIN P.C.B. (6/9)) SCHEMATIC DIAGRAM

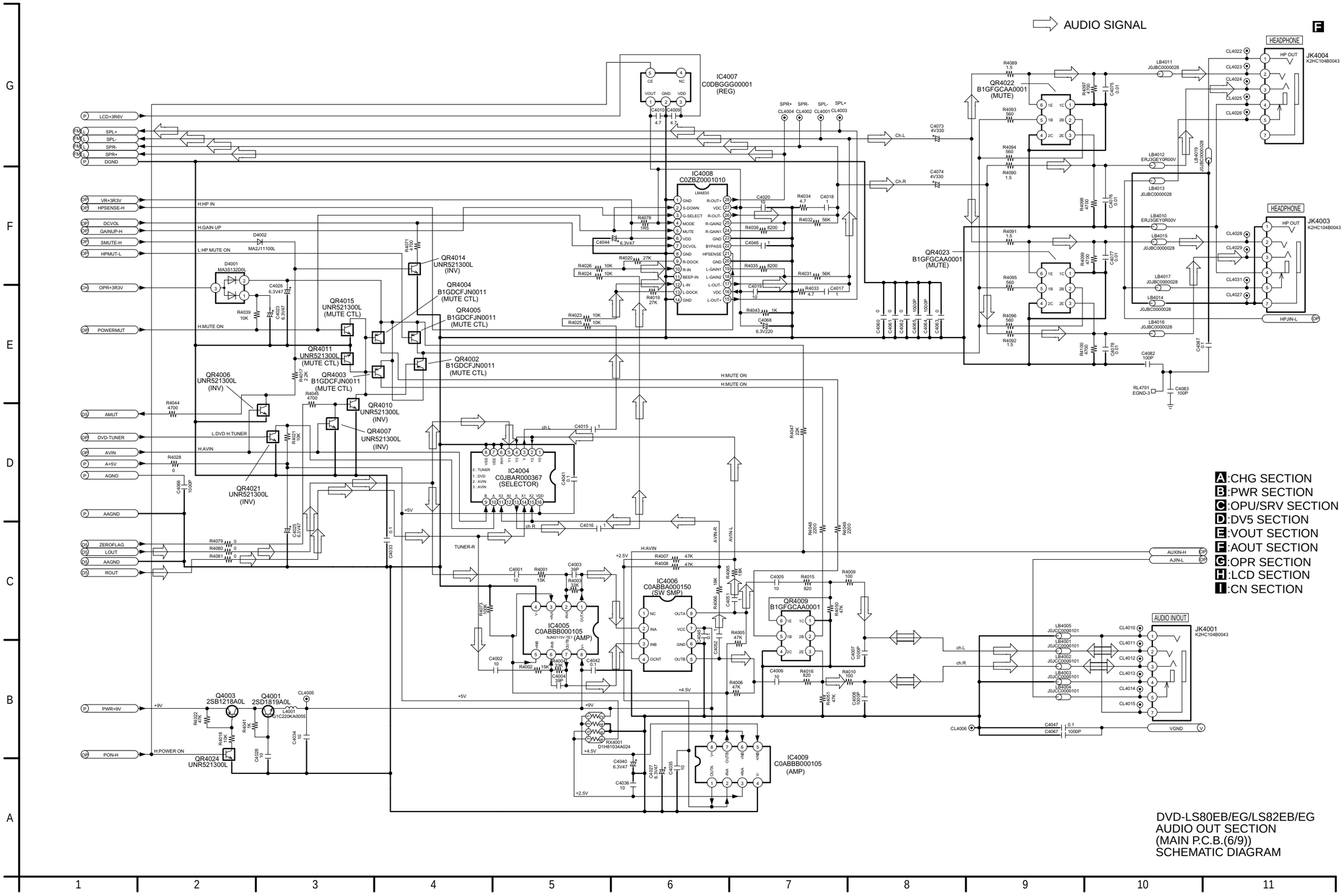

17.7. OPERATION SECTION (MAIN P.C.B. (7/9)) SCHEMATIC DIAGRAM

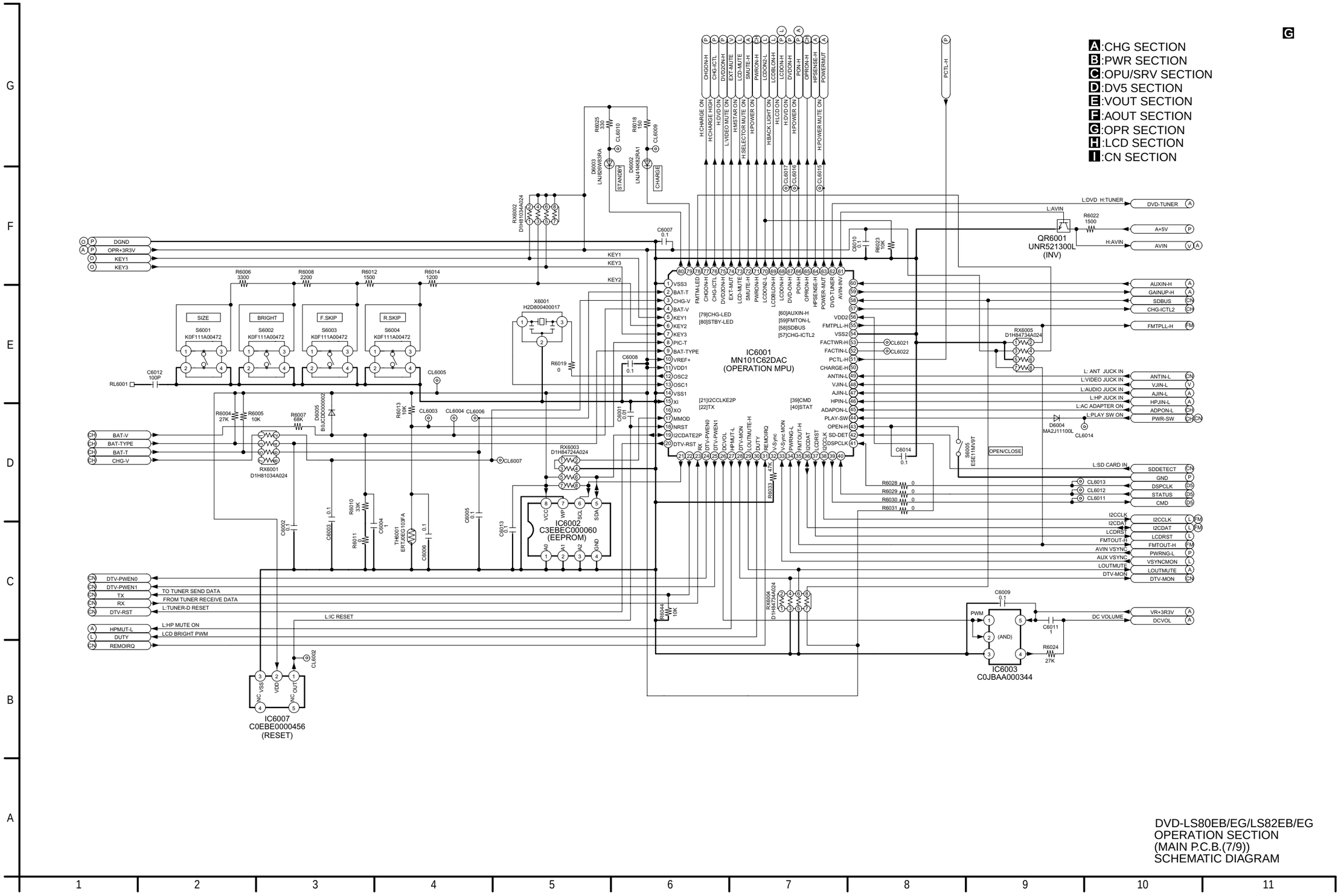

17.8. LCD IF SECTION (MAIN P.C.B. (8/9)) SCHEMATIC DIAGRAM

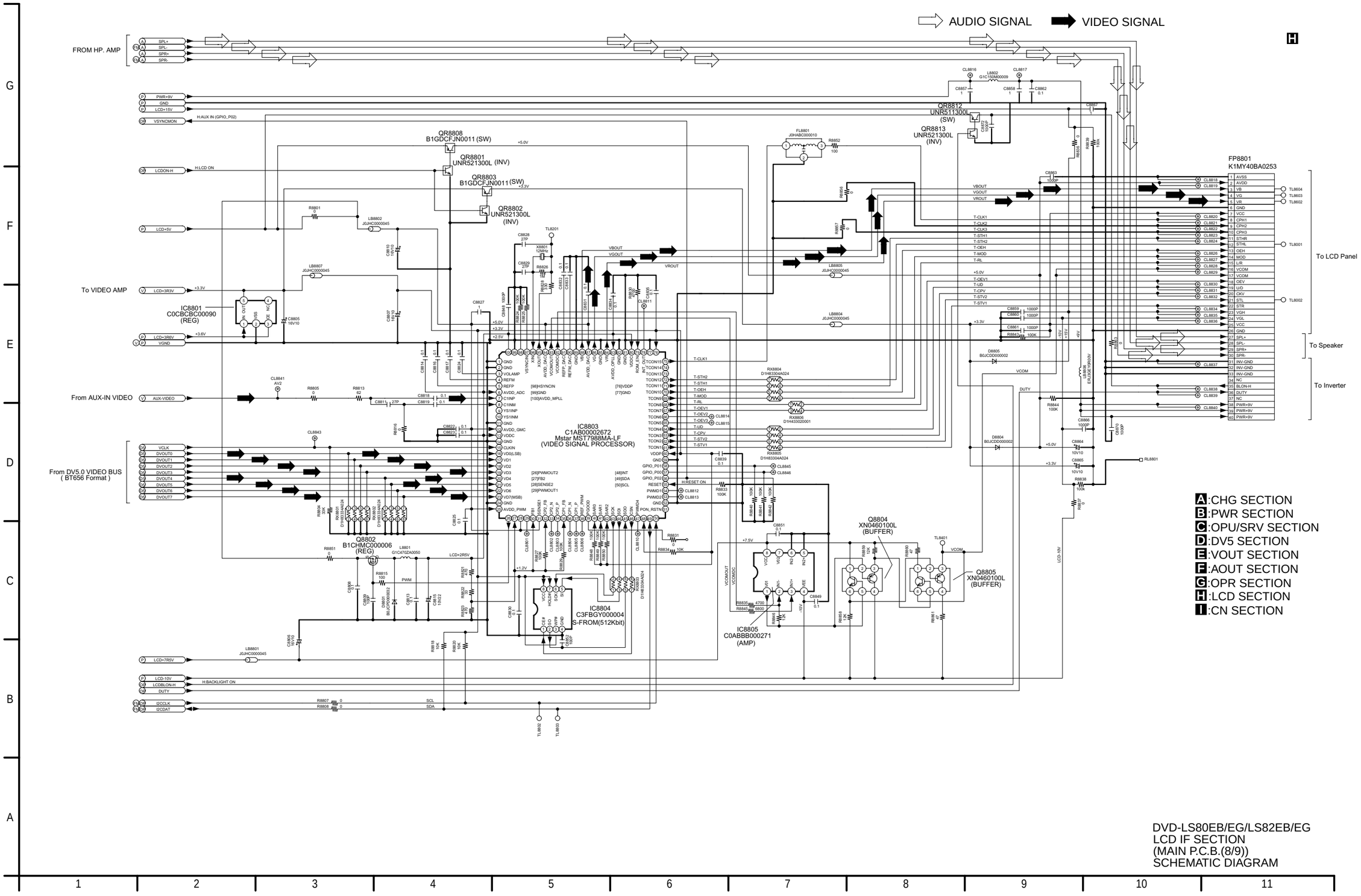

A:CHG SECTION
B:PWR SECTION
C:OPU/SRV SECTION
D:DV5 SECTION
E:VOUT SECTION
F:AOUT SECTION
G:OPR SECTION
H:LCD SECTION
I:CN SECTION

DVD-LS80EB/EG/LS82EB/EG
LCD IF SECTION
(MAIN P.C.B.(8/9))
SCHEMATIC DIAGRAM

17.9. CN SECTION (MAIN P.C.B. (9/9)) SCHEMATIC DIAGRAM

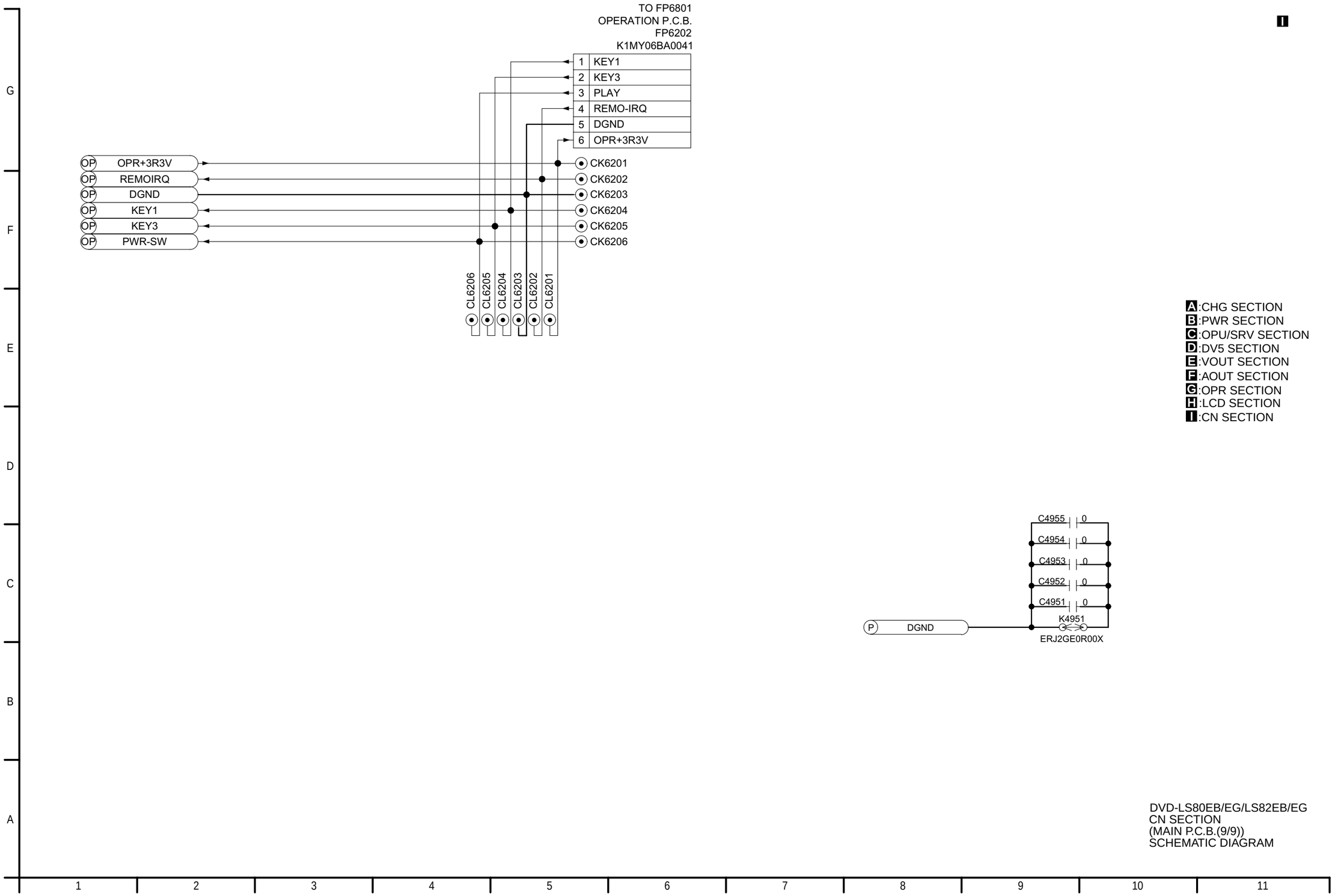

17.10. OPERATION SECTION (OPERATION P.C.B.) SCHEMATIC DIAGRAM

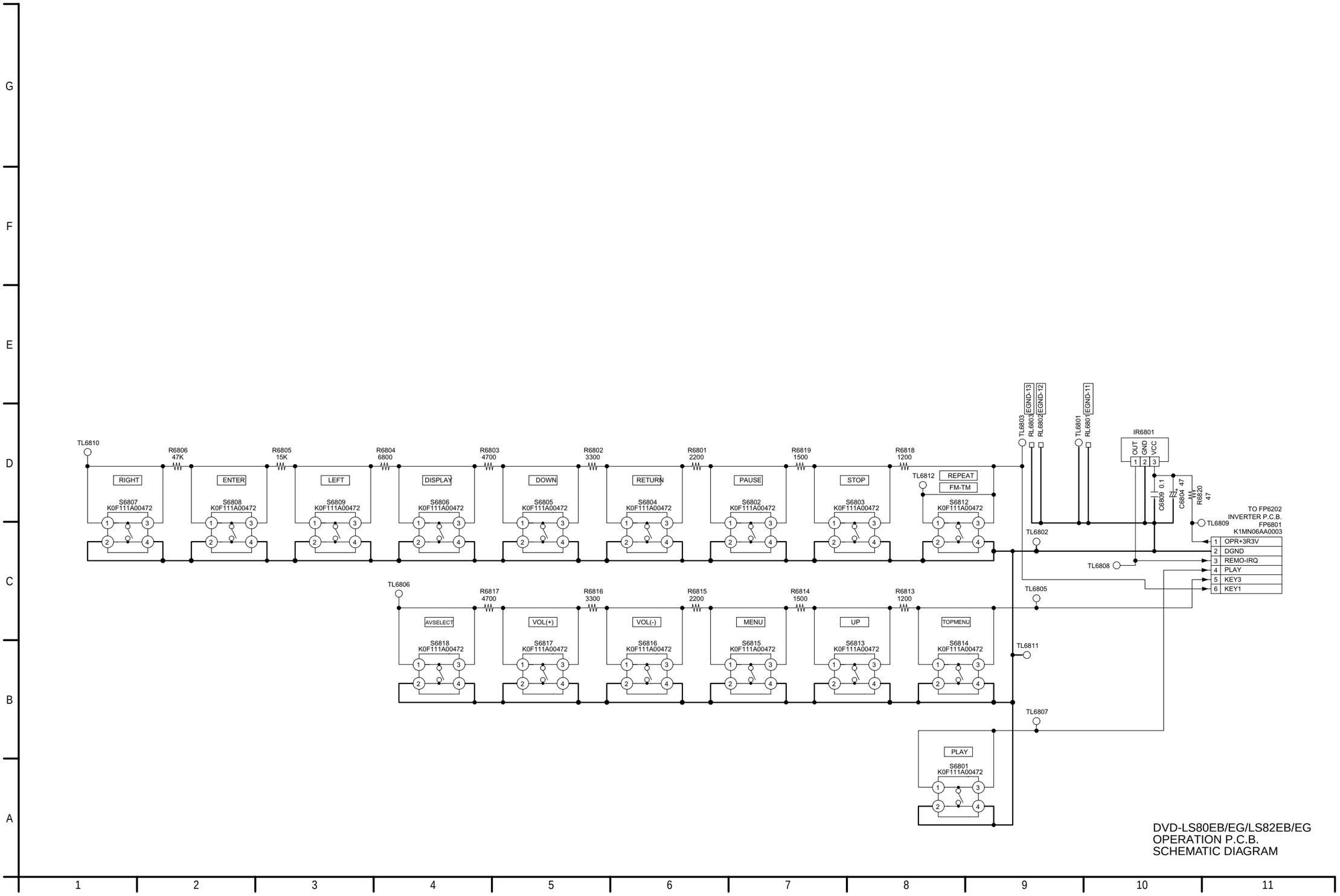

18 CIRCUIT BOARD ASSEMBLY

18.1. MAIN P.C.B. (1/2) (COMPONENT SIDE)

MAIN P.C.B. (1/2)

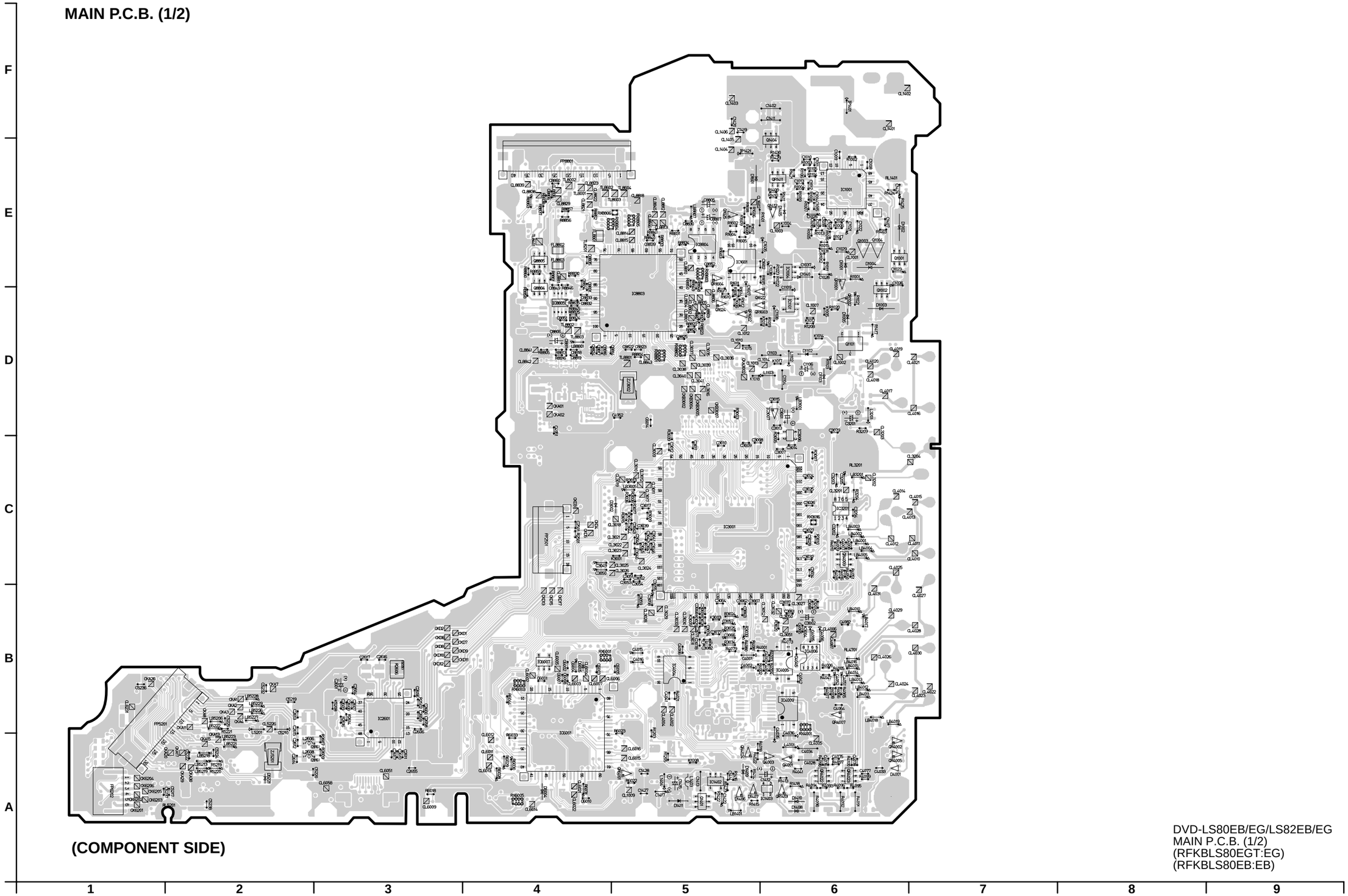

(COMPONENT SIDE)

DVD-LS80EB/EG/LS82EB/EG
MAIN P.C.B. (1/2)
(RFKBLS80EGT:EG)
(RFKBLS80EB:EB)

18.2. MAIN P.C.B. (2/2) (FOIL SIDE)

MAIN P.C.B. (2/2)

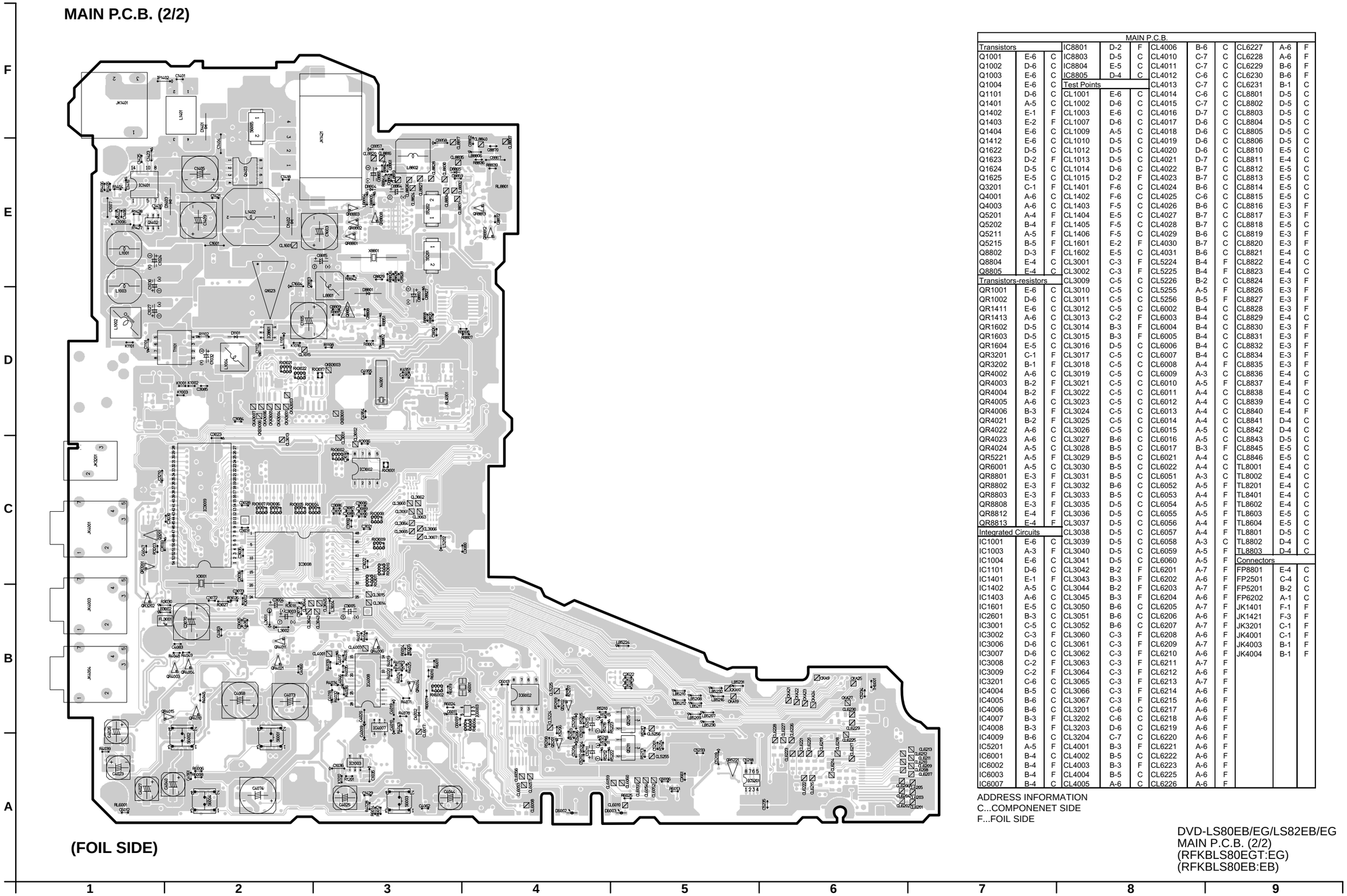

(FOIL SIDE)

MAIN P.C.B.														
Transistors			IC8801	D-2	F	CL4006	B-6	C	CL6227	A-6	F
Q1001	E-6	C	IC8803	D-5	C	CL4010	C-7	C	CL6228	A-6	F
Q1002	D-6	C	IC8804	E-5	C	CL4011	C-7	C	CL6229	B-6	F
Q1003	E-6	C	IC8805	D-4	C	CL4012	C-6	C	CL6230	B-6	F
Q1004	E-6	C	Test Points			CL4013	C-7	C	CL6231	B-1	C
Q1101	D-6	C	CL1001	E-6	C	CL4014	C-6	C	CL8801	D-5	C
Q1401	A-5	C	CL1002	D-6	C	CL4015	C-7	C	CL8802	D-5	C
Q1402	E-1	F	CL1003	E-6	C	CL4016	D-7	C	CL8803	D-5	C
Q1403	E-2	F	CL1007	D-6	C	CL4017	D-6	C	CL8804	D-5	C
Q1404	E-6	C	CL1009	A-5	C	CL4018	D-6	C	CL8805	D-5	C
Q1412	E-6	C	CL1010	D-5	C	CL4019	D-6	C	CL8806	D-5	C
Q1622	D-5	C	CL1012	D-5	C	CL4020	D-6	C	CL8810	E-5	C
Q1623	D-2	F	CL1013	D-5	C	CL4021	D-7	C	CL8811	E-4	C
Q1624	D-5	C	CL1014	D-6	C	CL4022	B-7	C	CL8812	E-5	C
Q1625	E-5	C	CL1015	D-2	F	CL4023	B-7	C	CL8813	E-5	C
Q3201	C-1	F	CL1401	F-6	C	CL4024	B-6	C	CL8814	E-5	C
Q4001	A-6	C	CL1402	F-6	C	CL4025	C-6	C	CL8815	E-5	C
Q4003	A-6	C	CL1403	F-5	C	CL4026	B-6	C	CL8816	E-3	F
Q5201	A-4	F	CL1404	E-5	C	CL4027	B-7	C	CL8817	E-3	F
Q5202	B-4	F	CL1405	F-5	C	CL4028	B-7	C	CL8818	E-5	C
Q5211	A-5	F	CL1406	F-5	C	CL4029	B-6	C	CL8819	E-3	F
Q5215	B-5	F	CL1601	E-2	F	CL4030	B-7	C	CL8820	E-3	F
Q8802	D-3	F	CL1602	E-5	C	CL4031	B-6	C	CL8821	E-4	C
Q8804	E-4	C	CL3001	C-3	F	CL5224	B-4	F	CL8822	E-4	C
Q8805	E-4	C	CL3002	C-3	F	CL5225	B-4	F	CL8823	E-4	C
Transistors-resistors			CL3009	C-5	C	CL5226	B-2	C	CL8824	E-3	F
QR1001	E-6	C	CL3010	C-5	C	CL5255	A-5	F	CL8826	E-3	F
QR1002	D-6	C	CL3011	C-5	C	CL5256	B-5	F	CL8827	E-3	F
QR1411	E-6	C	CL3012	C-5	C	CL6002	B-4	C	CL8828	E-3	F
QR1413	A-6	C	CL3013	C-2	F	CL6003	B-4	C	CL8829	E-4	C
QR1602	D-5	C	CL3014	B-3	F	CL6004	B-4	C	CL8830	E-3	F
QR1603	D-5	C	CL3015	B-3	F	CL6005	B-4	C	CL8831	E-3	F
QR1604	E-5	C	CL3016	D-5	C	CL6006	B-4	C	CL8832	E-3	F
QR3201	C-1	F	CL3017	C-5	C	CL6007	B-4	C	CL8834	E-3	F
QR3202	B-1	F	CL3018	C-5	C	CL6008	A-4	F	CL8835	E-3	F
QR4002	A-6	C	CL3019	C-5	C	CL6009	A-3	C	CL8836	E-4	C
QR4003	B-2	F	CL3021	C-5	C	CL6010	A-5	F	CL8837	E-4	F
QR4004	B-2	F	CL3022	C-5	C	CL6011	A-4	C	CL8838	E-4	C
QR4005	A-6	C	CL3023	C-5	C	CL6012	A-4	C	CL8839	E-4	C
QR4006	B-3	F	CL3024	C-5	C	CL6013	A-4	C	CL8840	E-4	F
QR4021	B-2	F	CL3025	C-5	C	CL6014	A-4	C	CL8841	D-4	C
QR4022	A-6	C	CL3026	C-5	C	CL6015	A-5	C	CL8842	D-4	C
QR4023	A-6	C	CL3027	B-6	C	CL6016	A-5	C	CL8843	D-5	C
QR4024	A-5	C	CL3028	B-5	C	CL6017	B-3	F	CL8845	E-5	C
QR5221	A-5	F	CL3029	B-5	C	CL6021	A-4	C	CL8846	E-5	C
QR6001	A-5	C	CL3030	B-5	C	CL6022	A-4	C	TL8001	E-4	C
QR8801	E-3	F	CL3031	B-5	C	CL6051	A-3	C	TL8002	E-4	C
QR8802	E-3	F	CL3032	B-6	C	CL6052	A-5	F	TL8201	E-4	C
QR8803	E-3	F	CL3033	B-5	C	CL6053	A-4	F	TL8401	E-4	C
QR8808	E-3	F	CL3035	D-5	C	CL6054	A-5	F	TL8602	E-4	C
QR8812	E-4	F	CL3036	D-5	C	CL6055	A-5	F	TL8603	E-5	C
QR8813	E-4	F	CL3037	D-5	C	CL6056	A-4	F	TL8604	E-5	C
Integrated Circuits			CL3038	D-5	C	CL6057	A-4	F	TL8801	D-5	C
IC1001	E-6	C	CL3039	D-5	C	CL6058	A-3	C	TL8802	D-4	C
IC1003	A-3	F	CL3040	D-5	C	CL6059	A-5	F	TL8803	D-4	C
IC1004	E-6	C	CL3041	D-5	C	CL6060	A-5	F	Connectors		
IC1101	D-6	C	CL3042	B-2	F	CL6201	A-7	F	FP8801	E-4	C
IC1401	E-1	F	CL3043	B-3	F	CL6202	A-6	F	FP2501	C-4	C
IC1402	A-5	C	CL3044	B-2	F	CL6203	A-7	F	FP5201	B-2	C
IC1403	A-6	C	CL3045	B-3	F	CL6204	A-6	F	FP6202	A-1	C
IC1601	E-5	C	CL3050	B-6	C	CL6205	A-7	F	JK1401	F-1	F
IC2601	B-3	C	CL3051	B-6	C	CL6206	A-6	F	JK1421	F-3	F
IC3001	C-5	C	CL3052	B-6	C	CL6207	A-7	F	JK3201	C-1	F
IC3002	C-3	F	CL3060	C-3	F	CL6208	A-6	F	JK4001	C-1	F
IC3006	D-6	C	CL3061	C-3	F	CL6209	A-7	F	JK4003	B-1	F
IC3007	D-6	C	CL3062	C-3	F	CL6210	A-6	F	JK4004	B-1	F
IC3008	C-2	F	CL3063	C-3	F	CL6211	A-7	F			
IC3009	C-2	F	CL3064	C-3	F	CL6212	A-6	F			
IC3201	C-6	C	CL3065	C-3	F	CL6213	A-7	F			
IC4004	B-5	C	CL3066	C-3	F	CL6214	A-6	F			
IC4005	B-6	C	CL3067	C-3	F	CL6215	A-6	F			
IC4006	B-6	C	CL3201	C-6	C	CL6217	A-6	F			
IC4007	B-3	F	CL3202	C-6	C	CL6218	A-6	F			
IC4008	B-3	F	CL3203	D-6	C	CL6219	A-6	F			
IC4009	B-6	C	CL3204	C-7	C	CL6220	A-6	F			
IC5201	A-5	F	CL4001	B-3	F	CL6221	A-6	F			
IC6001	B-4	C	CL4002	B-5	C	CL6222	A-6	F			
IC6002	B-4	F	CL4003	B-3	F	CL6223	A-6	F			
IC6003	B-4	F	CL4004	B-5	C	CL6225	A-6	F			
IC6007	B-4	C	CL4005	A-6	C	CL6226	A-6	F			

ADDRESS INFORMATION
C...COMPONENET SIDE
F...FOIL SIDE

DVD-LS80EB/EG/LS82EB/EG
MAIN P.C.B. (2/2)
(RFKBLS80EGT:EG)
(RFKBLS80EB:EB)

18.3. OPERATION P.C.B.

OPERATION P.C.B.

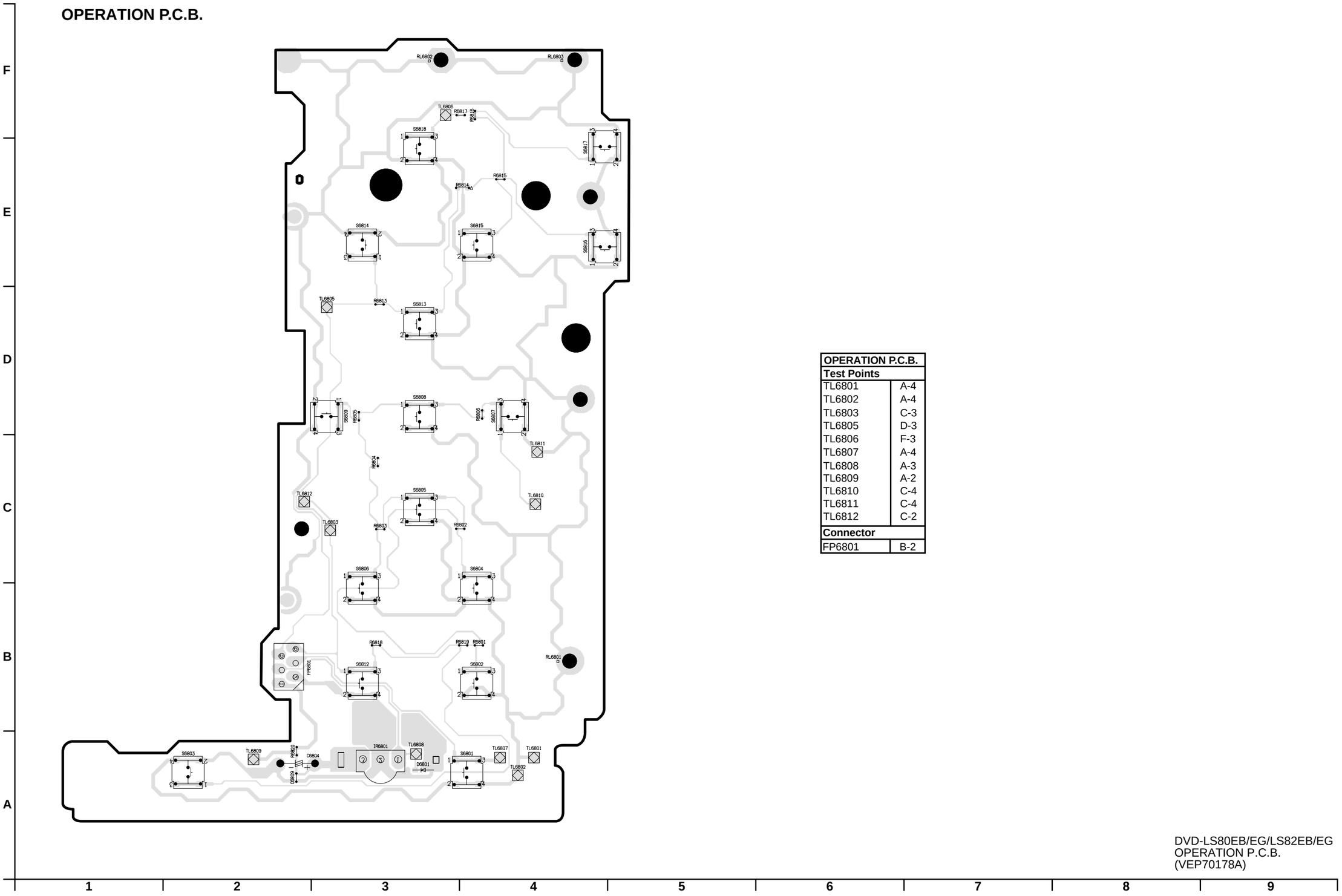

OPERATION P.C.B.	
Test Points	
TL6801	A-4
TL6802	A-4
TL6803	C-3
TL6805	D-3
TL6806	F-3
TL6807	A-4
TL6808	A-3
TL6809	A-2
TL6810	C-4
TL6811	C-4
TL6812	C-2
Connector	
FP6801	B-2

DVD-LS80EB/EG/LS82EB/EG
OPERATION P.C.B.
(VEP70178A)

19 EXPLODED VIEWS

19.1. Casing Parts & Mechanism Section Exploded View

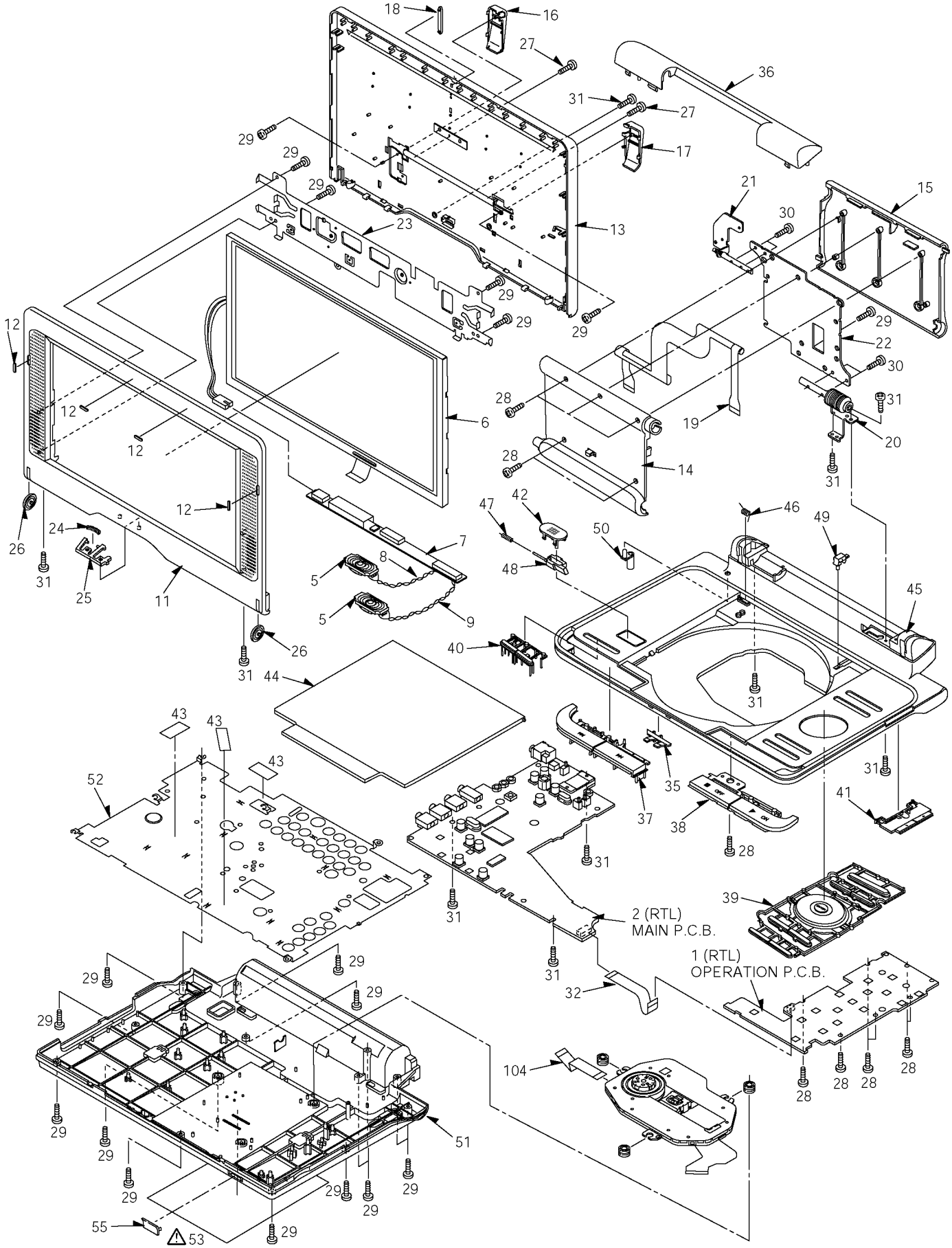

19.2. Mechanism Section Exploded View

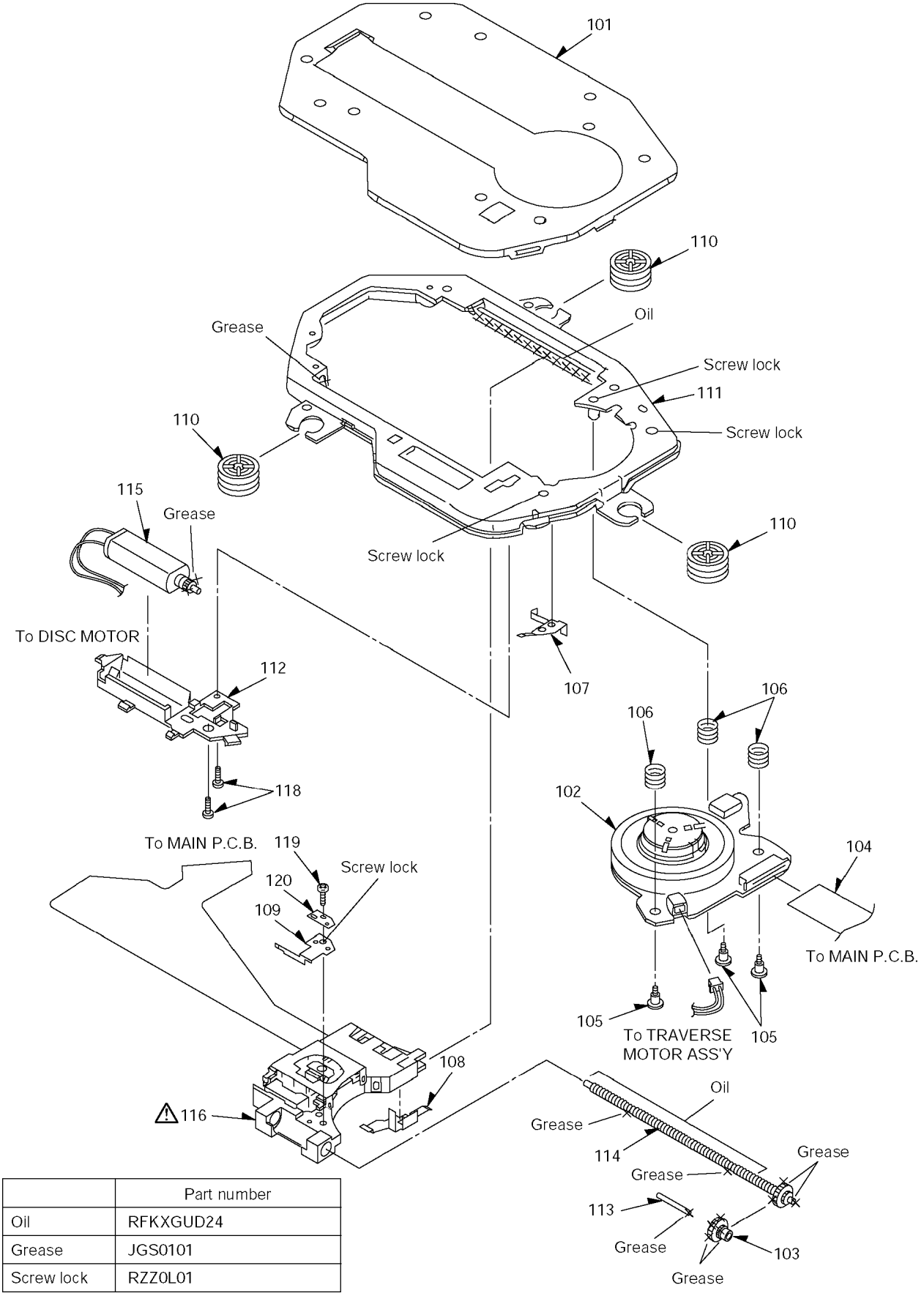

	Part number
Oil	RFKXGUD24
Grease	JGS0101
Screw lock	RZZ0L01

19.3. Packing & Accessories Exploded View

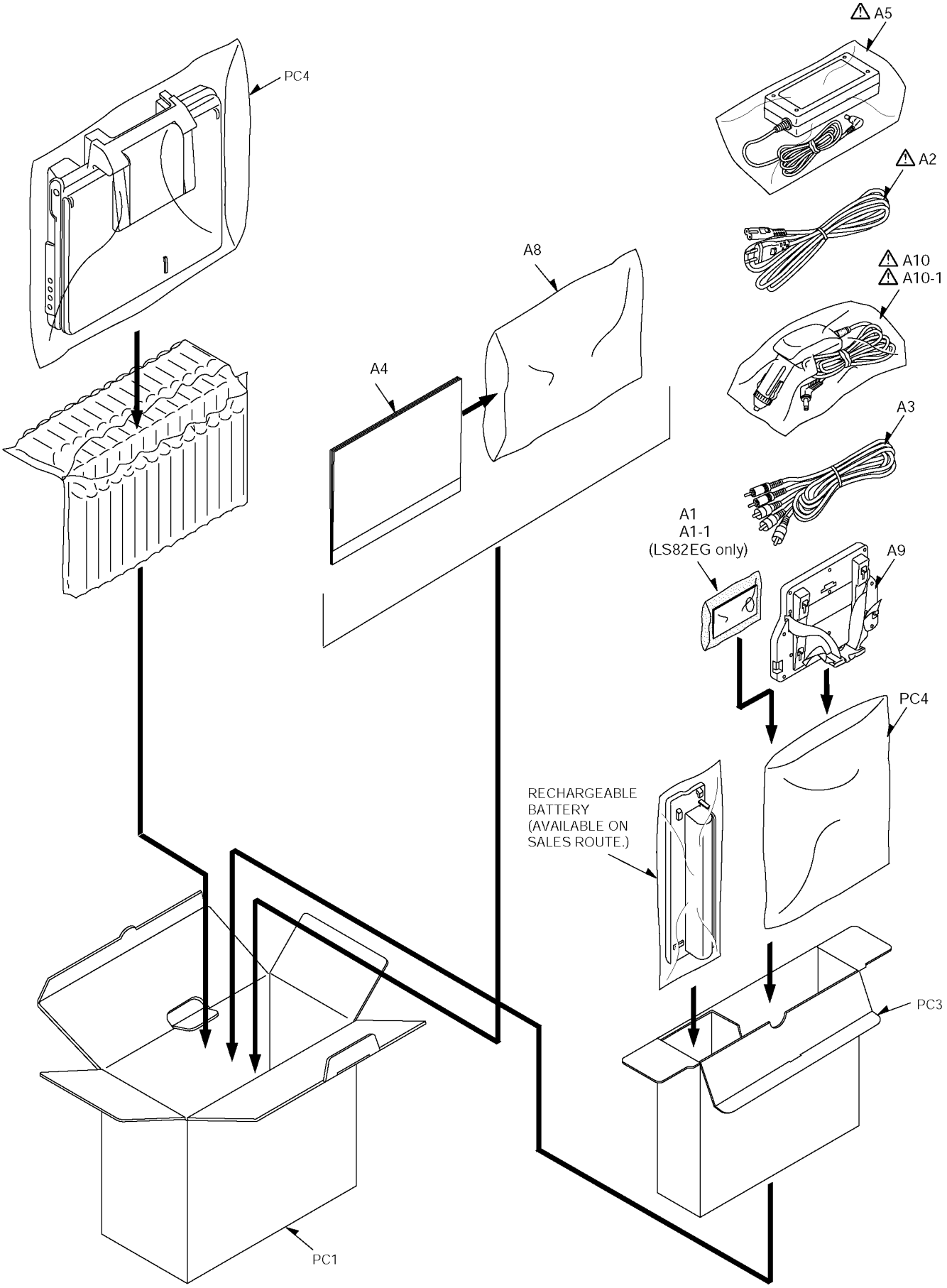

20 REPLACEMENT PARTS LIST

Notes:

*Important safety notice:

Components identified by ⚠ mark have special characteristics important for safety.

Furthermore, special parts which have purposes of fire-retardant (resistors), high-quality sound (capacitors), low-noise (resistors), etc. are used.

When replacing any of components, be sure to use only manufacture's specified parts shown in the parts list.

*Warning: This product uses a laser diode. Refer to caution statements.

*Capacity values are in microfarads (µF) unless specified otherwise, P=Pico-farads (pF), F=Farads (F).

*Resistance values are in ohms, unless specified otherwise, 1K=1,000 (OHM), 1M=1,000k (OHM).

*The marking (RTL) indicates the retention time is limited for this item. After the discontinuation of this assembly in production, it will no longer be available.

*(IA)-(IB), mark in Remarks indicate languages of instruction manual. [(IA):English, (IB):English/German/French/Spanish/Italian/Swedish/Dutch /Danish]

*Parts indicated with (PAVC-CSG) in the Remarks column are supplied by PAVC-CSG.

All other parts are supplied by PAVCSG.

Ref. No.	Part No.	Part Name & Description	Pcs	Remarks
1	VEP70178A	OPERATION P.C.B.	1	(RTL)
2	RFKBLS80EGT	MAIN P.C.B.	1	(RTL) EG
2	RFKBLS80EB	MAIN P.C.B.	1	(RTL) EB
5	L0AA01B00002	SPEAKER	2	
6	L5EDD2H00008	LCD PANEL	1	
7	N0GC1J000002	INVERTER P.C.B.	1	
8	REZ1808	SPEAKER (L) WIRE	1	
9	REZ1809	SPEAKER (R) WIRE	1	
11	RGP1357-K1	MONITOR CABINET	1	LS80
11	RGP1357-H1	MONITOR CABINET	1	LS82
12	RGQ0453-K	CUSHION(A)	4	
13	RFKNLS80CK	MONITOR COVER ASS'Y	1	LS80
13	RFKNLS82EGCS	MONITOR COVER ASS'Y	1	LS82
14	RGQ0471-S	MONO ARM	1	
15	RGQ0472-S	MONO ARM COVER	1	
16	RGQ0473-S	SHAFT HOLDER (L)	1	
17	RGQ0474-S	SHAFT HOLDER (R)	1	
18	RGQ0475-K	MONITOR CUSHION	1	LS80
18	RGQ0475-H	MONITOR CUSHION	1	LS82
19	RJB3046B	MONITOR FPC	1	
20	RKC0027	FRICTION HINGE (A)	1	
21	RKC0028	FRICTION HINGE (B)	1	
22	RMA1928-1	HINGE PLATE	1	
23	RMA2042	MONITOR SUPPORT ANGLE	1	
24	RMB0835	LOCK LEVER SPRING	1	
25	RML0721	MONO ARM LOCK LEVER	1	
26	RMR1705-H	ROLLER	2	
27	XQN17+B4FN	SCREW	2	
28	XQN17+BG4FNJ	SCREW	12	
29	XQN17+BG6FN	SCREW	20	
30	XQN2+B3FN	SCREW	4	
31	XTN17+6GFJK	SCREW	10	
32	REZ1838	FFC(6P)	1	

Ref. No.	Part No.	Part Name & Description	Pcs	Remarks
35	RGL0705A-W	LIGHTING COVER	1	
36	RGQ0430-2S	HINGE COVER	1	
37	RGU2516-S	MAIN BUTTON (L)	1	
38	RGU2517-S	MAIN BUTTON (R)	1	
39	RFKNLS80EGBK	OPERATION BUTTON A ASS'Y	1	LS80
39	RFKNLS82EGBS	OPERATION BUTTON A ASS'Y	1	LS82
40	RGU2519-K	OPERATION BUTTON B	1	LS80
40	RGU2519-H	OPERATION BUTTON B	1	LS82
41	RGU2520-S	OPERATION BUTTON C	1	
42	RGU2521-K	OPEN BUTTON	1	LS80
42	RGU2521-H	OPEN BUTTON	1	LS82
43	RMZ0905	INSULATION SHEET	3	
44	RKF0782B-K	DISC COVER	1	LS80
44	RKF0782-S	DISC COVER	1	LS82
45	RFKNLS80EGAK	MAIN CABINET ASS'Y	1	LS80EG
45	RFKNLS80EBAK	MAIN CABINET ASS'Y	1	LS80EB
45	RFKNLS82EGAS	MAIN CABINET ASS'Y	1	LS82EG
45	RFKNLS82EBAS	MAIN CABINET ASS'Y	1	LS82EB
46	RMB0833	OPEN SPRING	1	
47	RMB0834	OPEN BUTTON SPRING	1	
48	RML0699A	LOCK OFF LEVER	1	
49	RMR1703-W	STOPPER PIECE	1	
50	RMR1704-W	LCD OFF BUTTON	1	
51	RKS0436A-S	BOTTOM CABINET	1	
52	RMY0374	HEAT SINK	1	
53	RGN2919-K	NAME LABEL	1	LS80EG ⚠
53	RGN2919A-K	NAME LABEL	1	LS80EB ⚠
53	RGN2918-K	NAME LABEL	1	LS82EG ⚠
53	RGN2918A-K	NAME LABEL	1	LS82EB ⚠
55	RKW0831-W	REMOTE SENSOR WINDOW	1	
101	RMK0503-C	COVER	1	
102	BKL2E08KA	DISC MOTOR	1	
103	RDG0514-C	INTERFACE GEAR	1	
104	REZ1740	SPINDLE FFC	1	
105	RHD17037-1	SCREW	3	
106	RMB0681-J	TILT SPRING	3	
107	RMC0448-C	SPRING	1	
108	RMC0592-C	SPRING	1	
109	RMC0455-3C	SPRING	1	
110	RMG0562-K	DAMPER	3	
111	RMK0502-5C	TRAVERSE BASE	1	
112	RMR1393-WC	MOTOR COVER	1	
113	RMS0751-J	INTERFACE GEAR SHAFT	1	
114	RXJ0031	DRIVE SHAFT ASS'Y	1	
115	RXQ0786-1	TRAVERSE MOTOR ASS'Y	1	
116	RAF3400A-G	OPTICAL PICK-UP	1	⚠
118	XQN17+BG4FN	SCREW	2	
119	RHD17043-1	SCREW	1	
120	RMC0593-C	SUPPORT PLATE	1	
A1	N2QAHC000021	REMOTE CONTROL ASS'Y	1	LS82EG
A1-1	ETR028272008	BATTERY COVER	1	LS82EG
A2	K2CT3CA00004	AC CORD	1	EB ⚠
A2	K2CQ2CA00006	AC CORD	1	EG ⚠
A3	K2KA6CB00003	AV CORD	1	
A4	RQT8791-B	OPERATING INSTRUCTIONS	1	(IA)EB
A4	RQT8789-E	OPERATING INSTRUCTIONS	1	(IB)EG
A5	RFEA216W-W	AC ADAPTOR	1	⚠
A8	RPF0046-1	POLYETHYLENE BAG(F.B.)	1	
A9	RXQ1405A	BRACKET UNIT	1	
A10	RFEC203M-Y	CAR DC CABLE	1	⚠
A10-1	61MN-025L	FUSE	1	⚠

Ref. No.	Part No.	Part Name & Description	Pcs	Remarks
PC1	RPK2587	PACKING CASE	1	LS80EG
PC1	RPK2589	PACKING CASE	1	LS80EB
PC1	RPK2576	PACKING CASE	1	LS82EG
PC1	RPK2579	PACKING CASE	1	LS82EB
PC3	RPQF0309	ACCESSORY BOX	1	
PC4	RPFC0031-B	POLYETHYLENE BAG(UNIT)	2	
C1006	F1K1C106A062	16V 10U	1	
C1007	F1K1C106A062	16V 10U	1	
C1008	ECJ0EB1E561K	25V 560P	1	
C1009	F1G1A104A014	10V 0.1U	1	
C1010	ECJ0EB1E472K	25V 4700P	1	
C1011	ECJ0EC1H221J	50V 220P	1	
C1012	F1G1A104A014	10V 0.1U	1	
C1013	ECJ0EB1A333K	10V 0.033U	1	
C1014	ECJ0EC1H221J	50V 220P	1	
C1015	F1G1A104A014	10V 0.1U	1	
C1016	ECJ0EB1C103K	16V 0.01U	1	
C1017	ECJ0EC1H680J	50V 68P	1	
C1018	F1G1A104A014	10V 0.1U	1	
C1019	ECJ0EB1A273K	10V 0.27U	1	
C1020	ECJ0EC1H181J	50V 180P	1	
C1021	ECJ1VB1C105K	16V 1U	1	
C1022	ECJ1VB0J474K	6.3V 0.47U	1	
C1023	ECJ1VB1C105K	16V 1U	1	
C1024	F3G1A476A037	10V 47U	1	
C1025	ECJ1VB1C105K	16V 1U	1	
C1026	ECJ1VB1C105K	16V 1U	1	
C1027	F3G1A476A037	10V 47U	1	
C1028	ECJ1VB1C105K	16V 1U	1	
C1029	ECJ1VB1C105K	16V 1U	1	
C1030	F3G1A476A037	10V 47U	1	
C1031	ECJ1VB1C105K	16V 1U	1	
C1032	F3G1A476A037	10V 47U	1	
C1035	ECJ2FB0J475K	6.3V 4.7U	1	
C1036	ECJ2FB0J475K	6.3V 4.7U	1	
C1037	ECJ2FB0J475K	6.3V 4.7U	1	
C1038	F1H1C104A065	16V 0.1U	1	
C1040	ECJ2FB0J475K	6.3V 4.7U	1	
C1101	ECJ1VB1C105K	16V 1U	1	
C1102	ECJ1VB1C105K	16V 1U	1	
C1103	F1K1A1060017	10V 10U	1	
C1104	ECJ3VB1E104K	25V 0.1U	1	
C1105	F2H1E680A003	25V 68U	1	
C1106	F3G1A476A037	10V 47U	1	
C1108	F1J0J1060010	6.3V 10U	1	
C1109	ECJ2FB0J475K	6.3V 4.7U	1	
C1401	ECJ0EB1C103K	16V 0.01U	1	
C1402	ECJ3YB1E105K	25V 1U	1	
C1404	ECJ3YB1E105K	25V 1U	1	
C1405	F2G1E680A066	25V 68U	1	
C1406	ECJ0EC1H101J	50V 100P	1	
C1407	ECJ0EB1E332K	25V 3300P	1	
C1409	F2G1C101A077	16V 100U	1	
C1410	ECJ1VB1C105K	16V 1U	1	
C1411	ECJ3YB1E105K	25V 1U	1	
C1412	F3F1C106A042	16V 10U	1	
C1413	ECJ3YB1E475K	25V 4.7U	1	
C1414	ECJ0EB1E103K	25V 0.01U	1	
C1415	F3F0J226A057	6.3V 22U	1	
C1417	ECJ1VB1A105K	10V 1U	1	
C1418	F1G1A104A014	10V 0.1U	1	
C1419	F1G1A104A014	10V 0.1U	1	
C1420	F1G1A104A014	10V 0.1U	1	
C1421	ECJ0EC1H101J	50V 100P	1	
C1422	ECJ1VB1E104K	25V 0.1U	1	
C1423	ECJ1VB1C105K	16V 1U	1	
C1424	ECJ1VB1C105K	16V 1U	1	
C1425	F1G1A104A014	10V 0.1U	1	
C1427	ECJ0EB1E102K	25V 1000P	1	
C1428	ECJ0EB1E102K	25V 1000P	1	
C1429	ECJ0EB1E102K	25V 1000P	1	

Ref. No.	Part No.	Part Name & Description	Pcs	Remarks
C1430	ECJ0EC1H101J	50V 100P	1	
C1601	F1K1C106A062	16V 10U	1	
C1602	ECJ0EC1H101J	50V 100P	1	
C1603	F2G1C101A038	16V 100U	1	
C1604	F1J1A335A005	10V 3.3U	1	
C1605	F1J1A335A005	10V 3.3U	1	
C1606	F1G1A104A014	10V 0.1U	1	
C1607	F1J0J1060010	6.3V 10U	1	
C2501	ECJ0EC1H101J	50V 100P	1	
C2601	F3G1A476A037	10V 47U	1	
C2604	F1G1A104A014	10V 0.1U	1	
C2606	F1G1A104A014	10V 0.1U	1	
C2607	ECJ0EB1A333K	10V 0.033U	1	
C2608	ECJ0EB1A473K	10V 0.047U	1	
C2609	ECJ0EB1A473K	10V 0.047U	1	
C2610	ECJ0EB1E102K	25V 1000P	1	
C2611	ECJ0EB1C103K	16V 0.01U	1	
C2612	ECJ0EB1E332K	25V 3300P	1	
C2613	ECJ0EB1E332K	25V 3300P	1	
C2614	ECJ0EB1E332K	25V 3300P	1	
C2615	ECJ0EB1E332K	25V 3300P	1	
C2616	ECJ0EB1E222K	25V 2200P	1	
C2617	ECJ0EB1E222K	25V 2200P	1	
C2621	ECJ0EB1E222K	25V 2200P	1	
C2622	ECJ0EB1E222K	25V 2200P	1	
C2623	ECJ0EB1E222K	25V 2200P	1	
C2655	ECJ0EB1E102K	25V 1000P	1	
C2656	F1G1A104A014	10V 0.1U	1	
C2657	F1G1A104A014	10V 0.1U	1	
C2658	ECJ0EB1C103K	16V 0.01U	1	
C2659	ECJ0EB1C103K	16V 0.01U	1	
C2660	ECJ0EB1C103K	16V 0.01U	1	
C2661	ECJ0EB1E102K	25V 1000P	1	
C3001	F3F0J4760004	6.3V 47U	1	
C3002	F3F0J4760004	6.3V 47U	1	
C3003	F3F0J4760004	6.3V 47U	1	
C3004	F3F0J4760004	6.3V 47U	1	
C3005	F3F0J4760004	6.3V 47U	1	
C3006	ECJ0EC1H470J	50V 47P	1	
C3007	F1G1A104A014	10V 0.1U	1	
C3008	F1G1A104A014	10V 0.1U	1	
C3009	F1G1A104A014	10V 0.1U	1	
C3010	F1G1A104A014	10V 0.1U	1	
C3011	F1G1A104A014	10V 0.1U	1	
C3012	F1G1A104A014	10V 0.1U	1	
C3013	F1G1A104A014	10V 0.1U	1	
C3014	F1G1A104A014	10V 0.1U	1	
C3015	ECJ0EB1C153K	16V 0.015U	1	
C3016	F1G1A104A014	10V 0.1U	1	
C3017	F1G1A104A014	10V 0.1U	1	
C3021	F1G1A104A014	10V 0.1U	1	
C3022	F1G1A104A014	10V 0.1U	1	
C3023	ECJ1VB0J105K	6.3V 1U	1	
C3024	F1G1A104A014	10V 0.1U	1	
C3025	F1G1A104A014	10V 0.1U	1	
C3026	F1G1A104A014	10V 0.1U	1	
C3027	F1G1A104A014	10V 0.1U	1	
C3028	F1G1A104A014	10V 0.1U	1	
C3029	F1G1A104A014	10V 0.1U	1	
C3030	F1G1A104A014	10V 0.1U	1	
C3031	F1G1A104A014	10V 0.1U	1	
C3032	F1G1A104A014	10V 0.1U	1	
C3033	ECJ1VB0J105K	6.3V 1U	1	
C3034	F1G1A104A014	10V 0.1U	1	
C3035	F1G1A104A014	10V 0.1U	1	
C3036	ECJ1VB0J105K	6.3V 1U	1	
C3037	F1G1A104A014	10V 0.1U	1	
C3039	F1G1A104A014	10V 0.1U	1	
C3040	F1G1A104A014	10V 0.1U	1	
C3041	ECJ0EB1A333K	10V 0.033U	1	
C3042	F1G1A104A014	10V 0.1U	1	
C3043	ECJ0EB1C183K	16V 0.018U	1	
C3044	ECJ0EB1A683K	10V 0.068U	1	

Ref. No.	Part No.	Part Name & Description	Pcs	Remarks
C3045	F1G1A104A014	10V 0.1U	1	
C3046	ECJ0EB1C562K	16V 5600P	1	
C3047	ECJ0EB1C183K	16V 0.018U	1	
C3048	F1G1A104A014	10V 0.1U	1	
C3049	ECJ1VB0J105K	6.3V 1U	1	
C3050	ECJ1VB0J105K	6.3V 1U	1	
C3051	F1G1A104A014	10V 0.1U	1	
C3052	F1G1A104A014	10V 0.1U	1	
C3053	F1G1A104A014	10V 0.1U	1	
C3054	F1G1A104A014	10V 0.1U	1	
C3055	F1G1A104A014	10V 0.1U	1	
C3057	ECJ1VB0J105K	6.3V 1U	1	
C3058	ECJ1VB0J105K	6.3V 1U	1	
C3059	ECJ1VB0J105K	6.3V 1U	1	
C3061	F1G1A104A014	10V 0.1U	1	
C3062	F1G1A104A014	10V 0.1U	1	
C3063	F1G1A104A014	10V 0.1U	1	
C3064	F1G1A104A014	10V 0.1U	1	
C3065	F1G1A104A014	10V 0.1U	1	
C3066	ECJ1VB0J105K	6.3V 1U	1	
C3067	F1G1A104A014	10V 0.1U	1	
C3068	ECJ0EB1E102K	25V 1000P	1	
C3069	ECJ0EB1E102K	25V 1000P	1	
C3070	EEE0JA221WP	6.3V 220U	1	
C3071	ECJ0EB1E681K	25V 680P	1	
C3072	ECJ0EC1H120J	50V 12P	1	
C3073	ECJ0EC1H270J	50V 27P	1	
C3074	ECJ0EB1E821K	25V 820P	1	
C3075	ECJ0EB1E102K	25V 1000P	1	
C3076	ECJ0EB1E102K	25V 1000P	1	
C3077	ECJ0EB1E102K	25V 1000P	1	
C3078	ERJ2GE0R00X	1/16W 0	1	
C3079	ERJ2GE0R00X	1/16W 0	1	
C3080	ERJ2GE0R00X	1/16W 0	1	
C3081	ERJ2GE0R00X	1/16W 0	1	
C3082	ERJ2GE0R00X	1/16W 0	1	
C3084	ECJ0EB1E102K	25V 1000P	1	
C3085	ECJ0EB1E102K	25V 1000P	1	
C3086	ECJ0EC1H470J	50V 47P	1	
C3087	ECJ0EC1H470J	50V 47P	1	
C3088	ECJ0EC1H470J	50V 47P	1	
C3089	ECJ0EC1H470J	50V 47P	1	
C3090	ECJ0EC1H470J	50V 47P	1	
C3091	ECJ0EC1H470J	50V 47P	1	
C3092	ECJ0EC1H470J	50V 47P	1	
C3201	F3F0J476A047	6.3V 47U	1	
C3202	ECJ1VB0J105K	6.3V 1U	1	
C3203	ECJ1VB0J105K	6.3V 1U	1	
C3204	ECJ0EF1C104Z	16V 0.1U	1	
C3205	ECJ1VB0J105K	6.3V 1U	1	
C3210	ECJ1VB0J105K	6.3V 1U	1	
C4001	F1J0J1060010	6.3V 10U	1	
C4002	F1J0J1060010	6.3V 10U	1	
C4003	ECJ0EC1H390J	50V 39P	1	
C4004	ECJ0EC1H390J	50V 39P	1	
C4005	F1J0J1060010	6.3V 10U	1	
C4006	F1J0J1060010	6.3V 10U	1	
C4007	ECJ0EB1E102K	25V 1000P	1	
C4008	ECJ0EB1E102K	25V 1000P	1	
C4009	ECJ2FB0J475K	6.3V 4.7U	1	
C4010	ECJ2FB0J475K	6.3V 4.7U	1	
C4015	ECJ1VB0J105K	6.3V 1U	1	
C4016	ECJ1VB0J105K	6.3V 1U	1	
C4017	ECJ1VB0J105K	6.3V 1U	1	
C4018	ECJ1VB0J105K	6.3V 1U	1	
C4019	F1J0J1060010	6.3V 10U	1	
C4020	F1J0J1060010	6.3V 10U	1	
C4023	EEE0JA470WR	6.3V 47U	1	
C4025	EEE0JA470WR	6.3V 47U	1	
C4026	EEE0JA470WR	6.3V 47U	1	
C4027	EEE0JA470WR	6.3V 47U	1	
C4028	F1K1C106A062	16V 10U	1	
C4033	F1G1A104A014	10V 0.1U	1	

Ref. No.	Part No.	Part Name & Description	Pcs	Remarks
C4034	F1K1C106A062	16V 10U	1	
C4035	F1J0J1060010	6.3V 10U	1	
C4036	F1J0J1060010	6.3V 10U	1	
C4040	EEE0JA470WR	6.3V 47U	1	
C4041	F1G1A104A014	10V 0.1U	1	
C4042	F1G1A104A014	10V 0.1U	1	
C4044	EEE0JA470WR	6.3V 47U	1	
C4045	F1G1A104A014	10V 0.1U	1	
C4046	ECJ1VB0J105K	6.3V 1U	1	
C4047	F1G1A104A014	10V 0.1U	1	
C4051	ECJ1VB0J105K	6.3V 1U	1	
C4052	ECJ1VB0J105K	6.3V 1U	1	
C4060	ERJ2GE0R00X	1/16W 0	1	
C4061	ERJ2GE0R00X	1/16W 0	1	
C4062	ERJ2GE0R00X	1/16W 0	1	
C4063	ERJ2GE0R00X	1/16W 0	1	
C4064	ECJ0EB1E102K	25V 1000P	1	
C4065	ECJ0EB1E102K	25V 1000P	1	
C4066	ECJ0EB1E102K	25V 1000P	1	
C4067	ECJ0EB1E102K	25V 1000P	1	
C4068	EEE0JA221WP	6.3V 220U	1	
C4073	F2G0G331A012	4V 330U	1	
C4074	F2G0G331A012	4V 330U	1	
C4075	ECJ0EB1C103K	16V 0.01U	1	
C4076	ECJ0EB1C103K	16V 0.01U	1	
C4077	ECJ0EB1C103K	16V 0.01U	1	
C4078	ECJ0EB1C103K	16V 0.01U	1	
C4082	ECJ0EC1H101J	50V 100P	1	
C4083	ECJ0EC1H101J	50V 100P	1	
C4087	F1G1A104A014	10V 0.1U	1	
C4951	ERJ2GE0R00X	1/16W 0	1	
C4952	ERJ2GE0R00X	1/16W 0	1	
C4953	ERJ2GE0R00X	1/16W 0	1	
C4954	ERJ2GE0R00X	1/16W 0	1	
C4955	ERJ2GE0R00X	1/16W 0	1	
C5201	ECJ0EB1E102K	25V 1000P	1	
C5202	F1G1A104A014	10V 0.1U	1	
C5203	F1G1A104A014	10V 0.1U	1	
C5204	F1J0J1060010	6.3V 10U	1	
C5205	F1J0J1060010	6.3V 10U	1	
C5206	F1G1A104A014	10V 0.1U	1	
C5209	F1J0J1060010	6.3V 10U	1	
C5210	F1J0J1060010	6.3V 10U	1	
C5211	F3F0J4760004	6.3V 47U	1	
C5215	F3F0J4760004	6.3V 47U	1	
C5217	ECJ0EC1H101J	50V 100P	1	
C5218	F1G1A104A014	10V 0.1U	1	
C5219	ECJ0EB1E102K	25V 1000P	1	
C5220	ECJ0EB1E102K	25V 1000P	1	
C5222	ECJ0EC1H470J	50V 47P	1	
C5224	ECJ0EC1H470J	50V 47P	1	
C5225	ECJ0EC1H470J	50V 47P	1	
C5232	F1G1A104A014	10V 0.1U	1	
C5233	ECJ0EB1E102K	25V 1000P	1	
C5234	ECJ0EB1E102K	25V 1000P	1	
C5235	ECJ0EB1E102K	25V 1000P	1	
C5236	ECJ0EB1E102K	25V 1000P	1	
C5237	ECJ0EB1E102K	25V 1000P	1	
C5238	ECJ0EB1E102K	25V 1000P	1	
C6001	ECJ0EB1C103K	16V 0.01U	1	
C6002	F1G1A104A014	10V 0.1U	1	
C6003	F1G1A104A014	10V 0.1U	1	
C6004	ECJ1VB0J105K	6.3V 1U	1	
C6005	F1G1A104A014	10V 0.1U	1	
C6006	F1G1A104A014	10V 0.1U	1	
C6007	F1G1A104A014	10V 0.1U	1	
C6008	F1G1A104A014	10V 0.1U	1	
C6009	F1G1A104A014	10V 0.1U	1	
C6010	F1G1A104A014	10V 0.1U	1	
C6011	ECJ1VB0J105K	6.3V 1U	1	
C6012	ECJ0EC1H101J	50V 100P	1	
C6013	F1G1A104A014	10V 0.1U	1	
C6014	F1G1A104A014	10V 0.1U	1	

Ref. No.	Part No.	Part Name & Description	Pcs	Remarks
C6804	F2A0J470A245	6.3V 47U	1	
C6809	F1G1A104A014	10V 0.1U	1	
C8805	F3F1C106A042	16V 10U	1	
C8806	F3F1C106A042	16V 10U	1	
C8807	F3F1C106A042	16V 10U	1	
C8808	F1G1A104A014	10V 0.1U	1	
C8809	ECJ0EC1H101J	50V 100P	1	
C8810	F3F1C106A042	16V 10U	1	
C8811	ECJ0EC1H270J	50V 27P	1	
C8813	F1G1A104A014	10V 0.1U	1	
C8814	F1G1A104A014	10V 0.1U	1	
C8815	F3F1A226A047	10V 22U	1	
C8816	F1G1A104A014	10V 0.1U	1	
C8817	F1G1A104A014	10V 0.1U	1	
C8818	F1G1A104A014	10V 0.1U	1	
C8819	F1G1A104A014	10V 0.1U	1	
C8822	F1G1A104A014	10V 0.1U	1	
C8823	F1G1A104A014	10V 0.1U	1	
C8824	F1G1A104A014	10V 0.1U	1	
C8825	F1G1A104A014	10V 0.1U	1	
C8827	ECJ1VB0J105K	6.3V 1U	1	
C8828	ECJ0EC1H270J	50V 27P	1	
C8829	ECJ0EC1H270J	50V 27P	1	
C8830	F1G1A104A014	10V 0.1U	1	
C8831	F1G1A104A014	10V 0.1U	1	
C8832	F1G1A104A014	10V 0.1U	1	
C8833	F1G1A104A014	10V 0.1U	1	
C8834	F1G1A104A014	10V 0.1U	1	
C8835	F1G1A104A014	10V 0.1U	1	
C8839	F1G1A104A014	10V 0.1U	1	
C8849	F1G1A104A014	10V 0.1U	1	
C8851	F1G1A104A014	10V 0.1U	1	
C8852	ECJ0EC1H101J	50V 100P	1	
C8857	ECJ2YB1C105K	16V 1U	1	
C8858	ECJ2YB1C105K	16V 1U	1	
C8859	ECJ0EB1E102K	25V 1000P	1	
C8860	ECJ0EB1E102K	25V 1000P	1	
C8861	ECJ0EB1E102K	25V 1000P	1	
C8862	F1G1A104A014	10V 0.1U	1	
C8863	ECJ0EB1E102K	25V 1000P	1	
C8864	F3F1A106A047	10V 10U	1	
C8865	F3F1A106A047	10V 10U	1	
C8866	ECJ0EB1E102K	25V 1000P	1	
C8867	ECJ3YB1E105K	25V 1U	1	
C8870	ECJ0EB1E102K	25V 1000P	1	
C8872	ECJ0EB1E102K	25V 1000P	1	
D1001	MAZ81000ML	DIODE	1	
D1002	B0JCPD000026	DIODE	1	
D1003	B0JCPD000026	DIODE	1	
D1004	B0JCPD000026	DIODE	1	
D1005	MAZ80390LL	DIODE	1	
D1101	MA2J11100L	DIODE	1	
D1102	B0JCMD000022	DIODE	1	
D1103	MA2J11100L	DIODE	1	
D1401	B0JCPD000026	DIODE	1	
D1402	B0JCPD000026	DIODE	1	
D1403	B0JCPD000032	DIODE	1	
D1405	MAZ80510ML	DIODE	1	
D1406	MA3J142E0L	DIODE	1	
D1407	MA3J142E0L	DIODE	1	
D1408	MAZ80510ML	DIODE	1	
D1409	MA2J11100L	DIODE	1	
D1410	MA2J11100L	DIODE	1	
D1411	B0JCMD000022	DIODE	1	
D1601	B0JCPD000026	DIODE	1	
D3002	MA2J11100L	DIODE	1	
D4001	MA3S132D0L	DIODE	1	
D4002	MA2J11100L	DIODE	1	
D5221	B0JCCD000003	DIODE	1	
D6002	LNJ414K82RA1	DIODE	1	
D6003	LNJ826W83RA	DIODE	1	
D6004	MA2J11100L	DIODE	1	

Ref. No.	Part No.	Part Name & Description	Pcs	Remarks
D6005	B0JCDD000002	DIODE	1	
D8801	B0JCPD000032	DIODE	1	
D8804	B0JCDD000002	DIODE	1	
D8805	B0JCDD000002	DIODE	1	
FL8801	J0HABC000010	FILTER	1	
FP2501	K1MY18BA0229	CONNECTOR(18P)	1	
FP5201	K1MN30BA0079	CONNECTOR(30P)	1	
FP6202	K1MY06BA0041	CONNECTOR(6P)	1	
FP6801	K1MN06AA0003	CONNECTOR(6P)	1	
FP8801	K1MY40BA0253	CONNECTOR(40P)	1	
IC1001	C0DBAYY00233	IC	1	
IC1003	C0DBGGG00001	IC	1	
IC1004	C0DBGHG00003	IC	1	
IC1101	C0DBGHG00003	IC	1	
IC1401	C0DBAYY00214	IC	1	
IC1402	C0DBAGY00001	IC	1	
IC1403	C0EBL0000178	IC	1	
IC1601	C0DBDZZ00008	IC	1	
IC2601	C0GBN0000012	IC	1	
IC3001	MN2DS0018DP	IC	1	
IC3002	RFKWPDLS80C	IC	1	EG
IC3002	RFKWDBJ036EA	IC	1	EB
IC3006	C0EBA0000029	IC	1	
IC3007	C0EBE0000416	IC	1	
IC3008	RFKWPSB0K160	IC	1	(PAVC-CSG)
IC3009	C3ABPG000133	IC	1	
IC3201	C9ZB00000474	IC	1	
IC4004	C0JBAR000367	IC	1	
IC4005	C0ABBB000105	IC	1	
IC4006	C0ABBA000150	IC	1	
IC4007	C0DBGGG00001	IC	1	
IC4008	C0ZBZ0001010	IC	1	
IC4009	C0ABBB000105	IC	1	
IC5201	C0JBAS000265	IC	1	
IC6001	MN101C62DAC	IC	1	
IC6002	C3EBEC000060	IC	1	
IC6003	C0JBAA000344	IC	1	
IC6007	C0EBE0000456	IC	1	
IC8801	C0CBCBC00090	IC	1	
IC8803	C1AB00002672	IC	1	
IC8804	C3FBGY000004	IC	1	
IC8805	C0ABBB000271	IC	1	
IP1401	K5H3121A0004	FUSE 24V/50A	1	⚠
IP1402	K5H3121A0004	FUSE 24V/50A	1	⚠
IP1421	K5H3121A0004	FUSE 24V/50A	1	⚠
IR6801	B3RAB0000068	REMOTE SENSOR	1	
JK1401	K2ED2B000002	JACK,DC IN	1	
JK1421	K4ZZ04000033	BATTERY TERMINAL	1	
JK3201	K2HC103B0206	JACK	1	
JK4001	K2HC104B0043	JACK	1	
JK4003	K2HC104B0043	JACK	1	
JK4004	K2HC104B0043	JACK	1	
L1001	G1C150MA0182	COIL 15UH	1	
L1002	G1C150MA0218	COIL 15UH	1	
L1003	G1C150MA0182	COIL 15UH	1	
L1004	G1C150Z00004	COIL 15UH	1	
L1101	G1C100KA0055	CHIP INDUCTOR 10UH	1	
L1102	G1C100KA0055	CHIP INDUCTOR 10UH	1	
L1103	G1C100KA0055	CHIP INDUCTOR 10UH	1	
L1401	G1BYYYH00011	COIL	1	
L1402	G1C330M00026	COIL	1	
L1403	G1C101KA0023	COIL	1	
L1404	G1C220KA0055	CHIP INDUCTOR 22UH	1	
L2606	G1C100K00020	CHIP INDUCTOR 10UH	1	
L2608	G1C100K00020	CHIP INDUCTOR 10UH	1	
L3001	G1C100KA0055	CHIP INDUCTOR 10UH	1	

Ref. No.	Part No.	Part Name & Description	Pcs	Remarks
L3002	G1C100KA0055	CHIP INDUCTOR 10UH	1	
L3004	G1C100KA0055	CHIP INDUCTOR 10UH	1	
L3201	G1C220KA0055	CHIP INDUCTOR 22UH	1	
L4001	G1C220KA0055	CHIP INDUCTOR 22UH	1	
L5201	G1C100KA0055	CHIP INDUCTOR 10UH	1	
L5202	G1C100KA0055	CHIP INDUCTOR 10UH	1	
L8801	G1C470ZA0050	COIL	1	
L8802	G1C150M00009	COIL	1	
LB1401	ERJ3GEY0R00V	1/10W 0	1	
LB3001	J0JHC0000045	COIL	1	
LB3002	J0JHC0000045	COIL	1	
LB3005	J0JCC0000238	COIL	1	
LB3201	J0JBC0000086	COIL	1	
LB4001	J0JCC0000101	COIL	1	
LB4002	J0JCC0000101	COIL	1	
LB4003	J0JCC0000101	COIL	1	
LB4004	J0JCC0000101	COIL	1	
LB4005	J0JCC0000101	COIL	1	
LB4010	J0JBC0000028	COIL	1	
LB4011	J0JBC0000028	COIL	1	
LB4012	J0JBC0000028	COIL	1	
LB4013	J0JBC0000028	COIL	1	
LB4014	J0JBC0000028	COIL	1	
LB4015	J0JBC0000028	COIL	1	
LB4016	J0JBC0000028	COIL	1	
LB4017	J0JBC0000028	COIL	1	
LB4018	J0JBC0000028	COIL	1	
LB4019	J0JBC0000028	COIL	1	
LB5206	ERJ3GEY0R00V	1/10W 0	1	
LB5207	ERJ3GEY0R00V	1/10W 0	1	
LB5208	ERJ3GEY0R00V	1/10W 0	1	
LB5209	ERJ3GEY0R00V	1/10W 0	1	
LB5210	ERJ3GEY0R00V	1/10W 0	1	
LB5211	ERJ3GEY0R00V	1/10W 0	1	
LB5212	ERJ3GEY0R00V	1/10W 0	1	
LB5213	ERJ3GEY0R00V	1/10W 0	1	
LB5216	ERJ3GEY0R00V	1/10W 0	1	
LB5218	ERJ3GEY0R00V	1/10W 0	1	
LB5219	ERJ3GEY0R00V	1/10W 0	1	
LB5221	ERJ3GEY0R00V	1/10W 0	1	
LB5222	ERJ3GEY0R00V	1/10W 0	1	
LB5223	ERJ3GEY0R00V	1/10W 0	1	
LB5224	ERJ3GEY0R00V	1/10W 0	1	
LB5226	ERJ3GEY0R00V	1/10W 0	1	
LB5227	ERJ3GEY0R00V	1/10W 0	1	
LB5228	ERJ3GEY0R00V	1/10W 0	1	
LB5229	ERJ3GEY0R00V	1/10W 0	1	
LB5230	ERJ3GEY0R00V	1/10W 0	1	
LB5231	ERJ3GEY0R00V	1/10W 0	1	
LB5232	ERJ3GEY0R00V	1/10W 0	1	
LB8801	J0JHC0000045	COIL	1	
LB8802	J0JHC0000045	COIL	1	
LB8804	J0JHC0000045	COIL	1	
LB8805	J0JHC0000045	COIL	1	
LB8806	ERJ3GEY0R00V	1/10W 0	1	
LB8807	J0JHC0000045	COIL	1	
Q1001	B1DHDD000029	TRANSISTOR	1	
Q1002	B1DHDD000029	TRANSISTOR	1	
Q1003	B1CHMD000008	TRANSISTOR	1	
Q1004	B1CFMD000012	TRANSISTOR	1	
Q1101	B1CFNG000001	TRANSISTOR	1	
Q1401	B1DHCD000023	TRANSISTOR	1	
Q1402	B1HFGDA00001	TRANSISTOR	1	
Q1403	B1DHFD000008	TRANSISTOR	1	
Q1404	B1DHDD000022	TRANSISTOR	1	
Q1412	2SB1218ARL	TRANSISTOR	1	
Q1622	B1CFHA000002	TRANSISTOR	1	
Q1623	B1BBCF000031	TRANSISTOR	1	
Q1624	B1CFHA000002	TRANSISTOR	1	
Q1625	B1CFHA000002	TRANSISTOR	1	
Q3201	2SD132800L	TRANSISTOR	1	

Ref. No.	Part No.	Part Name & Description	Pcs	Remarks
Q4001	2SD1819A0L	TRANSISTOR	1	
Q4003	2SB1218A0L	TRANSISTOR	1	
Q5201	2SD1819A0L	TRANSISTOR	1	
Q5202	2SD1819A0L	TRANSISTOR	1	
Q5211	B1ADPC000004	TRANSISTOR	1	
Q5215	B1ADPC000004	TRANSISTOR	1	
Q8802	B1CHMC000006	TRANSISTOR	1	
Q8804	XN0460100L	TRANSISTOR	1	
Q8805	XN0460100L	TRANSISTOR	1	
QR1001	UNR521300L	TRANSISTOR	1	
QR1002	UNR521300L	TRANSISTOR	1	
QR1411	B1ZBZ0000049	TRANSISTOR	1	
QR1413	B1GDCFJN0011	TRANSISTOR	1	
QR1602	UNR521300L	TRANSISTOR	1	
QR1603	UNR521300L	TRANSISTOR	1	
QR1604	UNR521300L	TRANSISTOR	1	
QR3201	B1GDCFJN0011	TRANSISTOR	1	
QR3202	UNR521300L	TRANSISTOR	1	
QR4002	B1GDCFJN0011	TRANSISTOR	1	
QR4003	B1GDCFJN0011	TRANSISTOR	1	
QR4004	B1GDCFJN0011	TRANSISTOR	1	
QR4005	B1GDCFJN0011	TRANSISTOR	1	
QR4006	UNR521300L	TRANSISTOR	1	
QR4007	UNR521300L	TRANSISTOR	1	
QR4009	B1GFGCAA0001	TRANSISTOR	1	
QR4010	UNR521300L	TRANSISTOR	1	
QR4011	UNR521300L	TRANSISTOR	1	
QR4014	UNR521300L	TRANSISTOR	1	
QR4015	UNR521300L	TRANSISTOR	1	
QR4021	UNR521300L	TRANSISTOR	1	
QR4022	B1GFGCAA0001	TRANSISTOR	1	
QR4023	B1GFGCAA0001	TRANSISTOR	1	
QR4024	UNR521300L	TRANSISTOR	1	
QR5221	UNR212100L	TRANSISTOR	1	
QR6001	UNR521300L	TRANSISTOR	1	
QR8801	UNR521300L	TRANSISTOR	1	
QR8802	UNR521300L	TRANSISTOR	1	
QR8803	B1GDCFJN0011	TRANSISTOR	1	
QR8808	B1GDCFJN0011	TRANSISTOR	1	
QR8812	UNR511300L	TRANSISTOR	1	
QR8813	UNR521300L	TRANSISTOR	1	
R1001	ERJ3GEYJ102V	1/10W 1K	1	
R1002	ERJ2RHD103X	1/16W 10K	1	
R1003	ERJ2GEJ332X	1/16W 3.3K	1	
R1004	ERJ2GEJ332X	1/16W 3.3K	1	
R1005	ERJ2GEJ103X	1/16W 10K	1	
R1006	ERJ2GEJ392X	1/16W 3.9K	1	
R1007	ERJ2RHD183X	1/16W 18K	1	
R1008	ERJ2RHD272X	1/16W 2.7K	1	
R1009	ERJ2RHD222X	1/16W 2.2K	1	
R1011	ERJ2RHD393X	1/16W 39K	1	
R1012	ERJ2RHD222X	1/16W 2.2K	1	
R1013	ERJ2RHD682X	1/16W 6.8K	1	
R1015	ERJ2RHD822X	1/16W 8.2K	1	
R1016	ERJ2RHD102X	1/16W 1K	1	
R1017	ERJ2RHD682X	1/16W 6.8K	1	
R1019	ERJ2GEJ393X	1/16W 39K	1	
R1020	ERJ2GEJ563X	1/16W 56K	1	
R1021	ERJ3GEYJ102V	1/10W 1K	1	
R1022	ERJ2GEJ823X	1/16W 82K	1	
R1023	ERJ2GEJ683X	1/16W 68K	1	
R1102	ERJ3GEYJ100V	1/10W 10	1	
R1103	ERJ3GEYJ220V	1/10W 22	1	
R1104	ERJ2RHD223X	1/16W 22K	1	
R1105	ERJ2RHD272X	1/16W 2.7K	1	
R1106	ERJ2RHD182X	1/16W 1.8K	1	
R1108	ERJ2GE0R00X	1/16W 0	1	
R1201	ERJ2GE0R00X	1/16W 0	1	
R1203	ERJ2GE0R00X	1/16W 0	1	
R1205	ERJ2GE0R00X	1/16W 0	1	
R1208	ERJ2GE0R00X	1/16W 0	1	

Ref. No.	Part No.	Part Name & Description	Pcs	Remarks
R1402	ERJ2RHD183X	1/16W 18K	1	
R1403	ERJ2GEJ223X	1/16W 22K	1	
R1404	ERJ2RHD683X	1/16W 68K	1	
R1405	ERJ2RHD103X	1/16W 10K	1	
R1406	ERJ2GEJ391X	1/16W 390	1	
R1408	ERJ2GEJ103X	1/16W 10K	1	
R1410	ERJ2GEJ104X	1/16W 100K	1	
R1411	ERJ2GEJ223X	1/16W 22K	1	
R1413	ERJ2GEJ103X	1/16W 10K	1	
R1414	ERJ2GEJ473X	1/16W 47K	1	
R1415	ERJ2GEJ103X	1/16W 10K	1	
R1416	ERJ2GEJ105X	1/16W 1M	1	
R1417	ERJ3GEY0R00V	1/10W 0	1	
R1418	ERJ3GEY0R00V	1/10W 0	1	
R1421	ERJ2GEJ103X	1/16W 10K	1	
R1422	ERJ2GEJ100X	1/16W 10	1	
R1423	ERJ2GEJ100X	1/16W 10	1	
R1424	ERJ2GEJ104X	1/16W 100K	1	
R1425	ERJ2GEJ103X	1/16W 10K	1	
R1427	ERJ2GEJ331X	1/16W 330	1	
R1428	ERJ2GEJ221X	1/16W 220	1	
R1429	ERJ2GEJ102X	1/16W 1K	1	
R1430	ERJ2GEJ104X	1/16W 100K	1	
R1601	D1BFR220A007	RESISTOR	1	
R1602	ERJ2RHD104X	1/16W 0.1M	1	
R1603	ERJ2GEJ102X	1/16W 1K	1	
R1604	ERJ2RHD103X	1/16W 10K	1	
R1605	ERJ2RHD104X	1/16W 0.1M	1	
R1606	ERJ2RHD103X	1/16W 10K	1	
R1607	ERJ2RHD104X	1/16W 0.1M	1	
R1608	ERJ2RHD104X	1/16W 0.1M	1	
R1609	ERJ2GEJ102X	1/16W 1K	1	
R1610	ERJ2GEJ103X	1/16W 10K	1	
R1611	ERJ2RHD333X	1/16W 33K	1	
R1612	ERJ2RHD223X	1/16W 22K	1	
R1614	ERJ2RHD123X	1/16W 12K	1	
R1615	ERJ2GEJ473X	1/16W 47K	1	
R1616	ERJ2RHD682X	1/16W 6.8K	1	
R1617	ERJ2GEJ473X	1/16W 47K	1	
R1618	ERJ2GEJ332X	1/16W 3.3K	1	
R2501	ERJ2GEJ471X	1/16W 470	1	
R2502	ERJ2GEJ471X	1/16W 470	1	
R2606	ERJ14YKR39U	1/4W 3.9	1	
R2607	ERJ2GEJ330X	1/16W 33	1	
R2609	ERJ2GEJ330X	1/16W 33	1	
R2614	ERJ2GEJ151X	1/16W 150	1	
R2616	ERJ2GEJ151X	1/16W 150	1	
R3003	ERJ2GEJ103X	1/16W 10K	1	
R3005	ERJ2GEJ104X	1/16W 100K	1	
R3006	ERJ2GEJ101X	1/16W 100	1	
R3007	ERJ2GEJ473X	1/16W 47K	1	
R3008	ERJ2GEJ103X	1/16W 10K	1	
R3009	ERJ2GEJ104X	1/16W 100K	1	
R3010	ERJ2GEJ680X	1/16W 68	1	
R3013	ERJ2GEJ680X	1/16W 68	1	
R3014	ERJ2GEJ154X	1/16W 150K	1	
R3015	ERJ2GEJ223X	1/16W 22K	1	
R3017	ERJ2GEJ393X	1/16W 39K	1	
R3018	ERJ3RBD333V	1/16W 33K	1	
R3020	ERJ2GEJ471X	1/16W 470	1	
R3024	ERJ3RBD222V	1/16W 2.2K	1	
R3025	ERJ3RBD102V	1/16W 1K	1	
R3026	ERJ2GEJ105X	1/16W 1M	1	
R3027	ERJ3RBD331V	1/16W 330	1	
R3028	ERJ2GEJ123X	1/16W 12K	1	
R3029	ERJ2GEJ123X	1/16W 12K	1	
R3030	ERJ3GEYJ102V	1/10W 1K	1	
R3033	ERJ3RBD181V	1/16W 180	1	
R3034	ERJ3RED390V	1/16W 39	1	
R3036	ERJ2GEJ474X	1/16W 470K	1	
R3039	ERJ2GEJ103X	1/16W 10K	1	
R3201	ERJ2GE0R00X	1/16W 0	1	
R3203	ERJ2GEJ821X	1/16W 820	1	

Ref. No.	Part No.	Part Name & Description	Pcs	Remarks
R3204	ERJ3RED750V	1/16W 75	1	
R3209	ERJ2GEJ102X	1/16W 1K	1	
R4001	ERJ2GEJ153X	1/16W 15K	1	
R4002	ERJ2GEJ153X	1/16W 15K	1	
R4003	ERJ2GEJ333X	1/16W 33K	1	
R4004	ERJ2GEJ333X	1/16W 33K	1	
R4005	ERJ2GEJ473X	1/16W 47K	1	
R4006	ERJ2GEJ473X	1/16W 47K	1	
R4007	ERJ2GEJ473X	1/16W 47K	1	
R4008	ERJ2GEJ473X	1/16W 47K	1	
R4009	ERJ2GEJ101X	1/16W 100	1	
R4010	ERJ2GEJ101X	1/16W 100	1	
R4015	ERJ2GEJ821X	1/16W 820	1	
R4016	ERJ2GEJ821X	1/16W 820	1	
R4017	ERJ2GEJ222X	1/16W 2.2K	1	
R4018	ERJ2GEJ103X	1/16W 10K	1	
R4019	ERJ2GEJ273X	1/16W 27K	1	
R4020	ERJ2GEJ273X	1/16W 27K	1	
R4021	ERJ2GEJ103X	1/16W 10K	1	
R4022	ERJ2GEJ473X	1/16W 47K	1	
R4023	ERJ2GEJ103X	1/16W 10K	1	
R4024	ERJ2GEJ103X	1/16W 10K	1	
R4025	ERJ2GEJ103X	1/16W 10K	1	
R4026	ERJ2GEJ103X	1/16W 10K	1	
R4028	ERJ2GE0R00X	1/16W 0	1	
R4031	ERJ2GEJ563X	1/16W 56K	1	
R4032	ERJ2GEJ563X	1/16W 56K	1	
R4033	ERJ2GEJ4R7X	1/16W 4.7	1	
R4034	ERJ2GEJ4R7X	1/16W 4.7	1	
R4035	ERJ2GEJ822X	1/16W 8.2K	1	
R4036	ERJ2GEJ822X	1/16W 8.2K	1	
R4039	ERJ2GEJ103X	1/16W 10K	1	
R4041	ERJ2GEJ102X	1/16W 1K	1	
R4043	ERJ2GEJ102X	1/16W 1K	1	
R4044	ERJ2GEJ472X	1/16W 4.7K	1	
R4045	ERJ2GEJ472X	1/16W 4.7K	1	
R4047	ERJ2GEJ223X	1/16W 22K	1	
R4048	ERJ2GEJ222X	1/16W 2.2K	1	
R4049	ERJ2GEJ222X	1/16W 2.2K	1	
R4050	ERJ2GEJ473X	1/16W 47K	1	
R4051	ERJ2GEJ473X	1/16W 47K	1	
R4065	ERJ2GEJ183X	1/16W 18K	1	
R4066	ERJ2GEJ183X	1/16W 18K	1	
R4071	ERJ2GEJ472X	1/16W 4.7K	1	
R4073	ERJ2GEJ104X	1/16W 100K	1	
R4078	ERJ2GEJ1R5X	1/16W 1.5	1	
R4079	ERJ2GE0R00X	1/16W 0	1	
R4080	ERJ2GE0R00X	1/16W 0	1	
R4081	ERJ2GE0R00X	1/16W 0	1	
R4089	ERJ8GEYJ1R5V	1/4W 1.5	1	
R4090	ERJ8GEYJ1R5V	1/4W 1.5	1	
R4091	ERJ8GEYJ1R5V	1/4W 1.5	1	
R4092	ERJ8GEYJ1R5V	1/4W 1.5	1	
R4093	ERJ2GEJ561X	1/16W 560	1	
R4094	ERJ2GEJ561X	1/16W 560	1	
R4095	ERJ2GEJ561X	1/16W 560	1	
R4096	ERJ2GEJ561X	1/16W 560	1	
R4097	ERJ2GEJ472X	1/16W 4.7K	1	
R4098	ERJ2GEJ472X	1/16W 4.7K	1	
R4099	ERJ2GEJ472X	1/16W 4.7K	1	
R4100	ERJ2GEJ472X	1/16W 4.7K	1	
R5203	ERJ2GEJ333X	1/16W 33K	1	
R5204	ERJ2GEJ102X	1/16W 1K	1	
R5205	ERJ2GEJ102X	1/16W 1K	1	
R5208	ERJ2GEJ331X	1/16W 330	1	
R5209	ERJ2GEJ331X	1/16W 330	1	
R5210	ERJ2GEJ100X	1/16W 10	1	
R5211	ERJ2GEJ2R2X	1/16W 2.2	1	
R5212	D0GB560JA057	1/10W 56	1	
R5213	ERJ2GEJ473X	1/16W 47K	1	
R5214	ERJ2GEJ153X	1/16W 15K	1	
R5215	ERJ2GEJ2R2X	1/16W 2.2	1	
R5216	D0GB560JA057	1/10W 56	1	

Ref. No.	Part No.	Part Name & Description	Pcs	Remarks
R5217	ERJ2GEJ473X	1/16W 47K	1	
R5218	ERJ2GEJ100X	1/16W 10	1	
R5219	ERJ3RED910V	1/16W 91	1	
R5220	ERJ3RED910V	1/16W 91	1	
R5221	ERJ2GEJ102X	1/16W 1K	1	
R5222	D0GB560JA057	1/10W 56	1	
R5223	D0GB560JA057	1/10W 56	1	
R6004	ERJ2RHD273X	1/16W 27K	1	
R6005	ERJ2RHD103X	1/16W 10K	1	
R6006	ERJ2GEJ332X	1/16W 3.3K	1	
R6007	ERJ2RHD683X	1/16W 68K	1	
R6008	ERJ2GEJ222X	1/16W 2.2K	1	
R6010	ERJ2RHD333X	1/16W 33K	1	
R6011	ERJ2GE0R00X	1/16W 0	1	
R6012	ERJ2GEJ152X	1/16W 1.5K	1	
R6013	ERJ2RHD103X	1/16W 10K	1	
R6014	ERJ2GEJ122X	1/16W 1.2K	1	
R6018	ERJ2GEJ151X	1/16W 150	1	
R6019	ERJ2GE0R00X	1/16W 0	1	
R6022	ERJ2GEJ152X	1/16W 1.5K	1	
R6023	ERJ2GEJ103X	1/16W 10K	1	
R6024	ERJ2GEJ273X	1/16W 27K	1	
R6025	ERJ2GEJ331X	1/16W 330	1	
R6028	ERJ3GEY0R00V	1/10W 0	1	
R6029	ERJ3GEY0R00V	1/10W 0	1	
R6030	ERJ3GEY0R00V	1/10W 0	1	
R6031	ERJ3GEY0R00V	1/10W 0	1	
R6033	ERJ2GEJ473X	1/16W 47K	1	
R6044	ERJ2GEJ103X	1/16W 10K	1	
R6801	ERJ2GEJ222X	1/16W 2.2K	1	
R6802	ERJ2GEJ332X	1/16W 3.3K	1	
R6803	ERJ2GEJ472X	1/16W 4.7K	1	
R6804	ERJ2GEJ682X	1/16W 6.8K	1	
R6805	ERJ2GEJ153X	1/16W 15K	1	
R6806	ERJ2GEJ473X	1/16W 47K	1	
R6813	ERJ2GEJ122X	1/16W 1.2K	1	
R6814	ERJ3GEYJ152V	1/10W 1.5K	1	
R6815	ERJ2GEJ222X	1/16W 2.2K	1	
R6816	ERJ2GEJ332X	1/16W 3.3K	1	
R6817	ERJ2GEJ472X	1/16W 4.7K	1	
R6818	ERJ2GEJ122X	1/16W 1.2K	1	
R6819	ERJ2GEJ152X	1/16W 1.5K	1	
R6820	ERJ2GEJ470X	1/16W 47	1	
R8801	ERJ2GE0R00X	1/16W 0	1	
R8804	ERJ2GEJ333X	1/16W 33K	1	
R8805	ERJ2GE0R00X	1/16W 0	1	
R8807	ERJ2GE0R00X	1/16W 0	1	
R8808	ERJ2GE0R00X	1/16W 0	1	
R8813	ERJ2GEJ620X	1/16W 62	1	
R8815	ERJ2GEJ101X	1/16W 100	1	
R8816	ERJ2GE0R00X	1/16W 0	1	
R8818	ERJ2GEJ103X	1/16W 10K	1	
R8820	ERJ2GEJ103X	1/16W 10K	1	
R8821	ERJ2RHD471X	1/16W 470	1	
R8822	ERJ2RKD330X	1/16W 33	1	
R8823	ERJ2RHD471X	1/16W 470	1	
R8824	ERJ2GEJ104X	1/16W 100K	1	
R8825	ERJ2GEJ104X	1/16W 100K	1	
R8826	ERJ2GEJ105X	1/16W 1M	1	
R8827	ERJ2GEJ104X	1/16W 100K	1	
R8828	ERJ2GEJ331X	1/16W 330	1	
R8829	ERJ2GEJ104X	1/16W 100K	1	
R8830	ERJ2GEJ472X	1/16W 4.7K	1	
R8831	ERJ2GE0R00X	1/16W 0	1	
R8833	ERJ2GEJ104X	1/16W 100K	1	
R8834	ERJ2GEJ103X	1/16W 10K	1	
R8835	ERJ2GEJ472X	1/16W 4.7K	1	
R8836	ERJ2GE0R00X	1/16W 0	1	
R8837	ERJ2GE0R00X	1/16W 0	1	
R8838	ERJ2GEJ104X	1/16W 100K	1	
R8839	ERJ2GEJ104X	1/16W 100K	1	
R8840	ERJ2GEJ104X	1/16W 100K	1	
R8841	ERJ2GEJ104X	1/16W 100K	1	

Ref. No.	Part No.	Part Name & Description	Pcs	Remarks
R8842	ERJ2GEJ104X	1/16W 100K	1	
R8843	ERJ2GEJ104X	1/16W 100K	1	
R8844	ERJ2GEJ104X	1/16W 100K	1	
R8845	ERJ2GEJ682X	1/16W 6.8K	1	
R8846	ERJ2GEJ123X	1/16W 12K	1	
R8848	ERJ2GEJ104X	1/16W 100K	1	
R8849	ERJ2GEJ104X	1/16W 100K	1	
R8850	ERJ2GEJ104X	1/16W 100K	1	
R8851	ERJ3GEY0R00V	1/10W 0	1	
R8852	ERJ2GEJ101X	1/16W 100	1	
R8856	ERJ2GE0R00X	1/16W 0	1	
R8857	ERJ2GE0R00X	1/16W 0	1	
R8858	ERJ2GEJ123X	1/16W 12K	1	
R8859	ERJ2GEJ123X	1/16W 12K	1	
R8860	ERJ2GEJ470X	1/16W 47	1	
R8861	ERJ2GEJ470X	1/16W 47	1	
R8863	ERJ3GEY0R00V	1/10W 0	1	
RX3001	D1H447220001	RESISTOR-RESISTOR	1	
RX3002	D1H81034A024	RESISTOR-RESISTOR	1	
RX3004	D1H8R0040009	RESISTOR-RESISTOR	1	
RX3005	D1H8R0040009	RESISTOR-RESISTOR	1	
RX3006	D1H8R0040009	RESISTOR-RESISTOR	1	
RX3007	D1H8R0040009	RESISTOR-RESISTOR	1	
RX3008	D1H8R0040009	RESISTOR-RESISTOR	1	
RX3009	D1H8R0040009	RESISTOR-RESISTOR	1	
RX3010	D1H8R0040009	RESISTOR-RESISTOR	1	
RX3011	D1H8R0040009	RESISTOR-RESISTOR	1	
RX3016	D1H422020001	RESISTOR-RESISTOR	1	
RX3017	D1H447220001	RESISTOR-RESISTOR	1	
RX3021	D1H81014A024	RESISTOR-RESISTOR	1	
RX3022	D1H81014A024	RESISTOR-RESISTOR	1	
RX4001	D1H81034A024	RESISTOR-RESISTOR	1	
RX6001	D1H81034A024	RESISTOR-RESISTOR	1	
RX6002	D1H81034A024	RESISTOR-RESISTOR	1	
RX6003	D1H84724A024	RESISTOR-RESISTOR	1	
RX6004	D1H84734A024	RESISTOR-RESISTOR	1	
RX6005	D1H84734A024	RESISTOR-RESISTOR	1	
RX8801	D1H83334A024	RESISTOR-RESISTOR	1	
RX8802	D1H83334A024	RESISTOR-RESISTOR	1	
RX8803	D1H83304A024	RESISTOR-RESISTOR	1	
RX8804	D1H83304A024	RESISTOR-RESISTOR	1	
RX8805	D1H83304A024	RESISTOR-RESISTOR	1	
RX8806	D1H433020001	RESISTOR-RESISTOR	1	
S5201	ESE11MV9T	SWITCH	1	
S5202	ESE11MV9T	SWITCH	1	
S6001	K0F111A00472	SWITCH	1	
S6002	K0F111A00472	SWITCH	1	
S6003	K0F111A00472	SWITCH	1	
S6004	K0F111A00472	SWITCH	1	
S6005	ESE11MV9T	SWITCH	1	
S6801	K0F111A00472	SWITCH	1	
S6802	K0F111A00472	SWITCH	1	
S6803	K0F111A00472	SWITCH	1	
S6804	K0F111A00472	SWITCH	1	
S6805	K0F111A00472	SWITCH	1	
S6806	K0F111A00472	SWITCH	1	
S6807	K0F111A00472	SWITCH	1	
S6808	K0F111A00472	SWITCH	1	
S6809	K0F111A00472	SWITCH	1	
S6812	K0F111A00472	SWITCH	1	
S6813	K0F111A00472	SWITCH	1	
S6814	K0F111A00472	SWITCH	1	
S6815	K0F111A00472	SWITCH	1	
S6816	K0F111A00472	SWITCH	1	
S6817	K0F111A00472	SWITCH	1	
S6818	K0F111A00472	SWITCH	1	
T1101	G5ZZ00000100	TRANSFORMER	1	
TH6001	ERTJ0EG103FA	THERMISTER	1	

Ref. No.	Part No.	Part Name & Description	Pcs	Remarks
X3001	H0J270500080	CRYSTAL OSCILLATOR	1	
X6001	H2D800400017	CRYSTAL OSCILLATOR	1	
X8801	H0J120500048	CRYSTAL OSCILLATOR	1	