ORDER NO.DSC0803021CE
B26

Service Manual

Digital Camera

Model No. **DMC-TZ5P**
DMC-TZ5PC
DMC-TZ5PL
DMC-TZ5PR
DMC-TZ5EB
DMC-TZ5EE
DMC-TZ5EF
DMC-TZ5EG
DMC-TZ5E
DMC-TZ5SG
DMC-TZ15GC
DMC-TZ15GD
DMC-TZ15GK
DMC-TZ15GN
DMC-TZ15GT
DMC-TZ15GJ

LUMIX

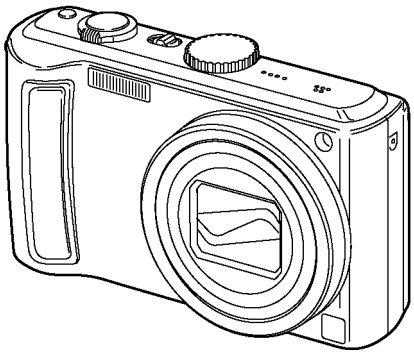

VOL.1

Colours
(S).....Silver Type (except PR/GD)
(K).....Black Type
(A).....Blue Type (only DMC-TZ5P/PC/PL/PR/EE/EG/E)
(TA).....Dark Brown Type (only DMC-TZ5EF/EG/E)
(T).....Brown Type (only DMC-TZ5SG, DMC-TZ15GC/GK/GJ)

Panasonic

⚠ WARNING

This service information is designed for experienced repair technicians only and is not designed for use by the general public.
It does not contain warnings or cautions to advise non-technical individuals of potential dangers in attempting to service a product.
Products powered by electricity should be serviced or repaired only by experienced professional technicians. Any attempt to service or repair the product or products dealt with in this service information by anyone else could result in serious injury or death.

TABLE OF CONTENTS

PAGE

1 Safety Precautions

1.1. General Guidelines

1. IMPORTANT SAFETY NOTICE
   There are special components used in this equipment which are important for safety. These parts are marked by ⚠ in the Schematic Diagrams, Circuit Board Layout, Exploded Views and Replacement Parts List. It is essential that these critical parts should be replaced with manufacturer's specified parts to prevent X-RADIATION, shock fire, or other hazards. Do not modify the original design without permission of manufacturer.
2. An Isolation Transformer should always be used during the servicing of AC Adaptor whose chassis is not isolated from the AC power line. Use a transformer of adequate power rating as this protects the technician from accidents resulting in personal injury from electrical shocks. It will also protect AC Adaptor from being damaged by accidental shorting that may occur during servicing.
3. When servicing, observe the original lead dress. It a short circuit is found, replace all parts which have been overheated or damaged by the short circuit.
4. After servicing, see to it that all the protective devices such as insulation barriers, insulation papers shields are properly installed.
5. After servicing, make the following leakage current checks to prevent the customer from being exposed to shock hazards.

1.2. Leakage Current Cold Check

1. Unplug the AC cord and connect a jumper between the two prongs on the plug.
2. Measure the resistance value, with an ohmmeter, between the jumpered AC plug and each exposed metallic cabinet part on the equipment such as screwheads, connectors, control shafts, etc. When the exposed metallic part has a return path to the chassis, the reading should be between 1MΩ and 5.2MΩ. When the exposed metal does not have a return path to the chassis, the reading must be infinity.

1.3. Leakage Current Hot Check (See Figure 1)

1. Plug the AC cord directly into the AC outlet. Do not use an isolation transformer for this check.
2. Connect a 1.5kΩ, 10 W resistor, in parallel with a 0.15μF capacitor, between each exposed metallic part on the set and a good earth ground, as shown in Figure 1.
3. Use an AC voltmeter, with 1 kΩ/V or more sensitivity, to measure the potential across the resistor.
4. Check each exposed metallic part, and measure the voltage at each point.
5. Reverse the AC plug in the AC outlet and repeat each of the above measurements.
6. The potential at any point should not exceed 0.75 V RMS. A leakage current tester (Simpson Model 229 or equivalent) may be used to make the hot checks, leakage current must not exceed 1/2 mA. In case a measurement is outside of the limits specified, there is a possibility of a shock hazard, and the equipment should be repaired and rechecked before it is returned to the customer.

Hot-Check Circuit

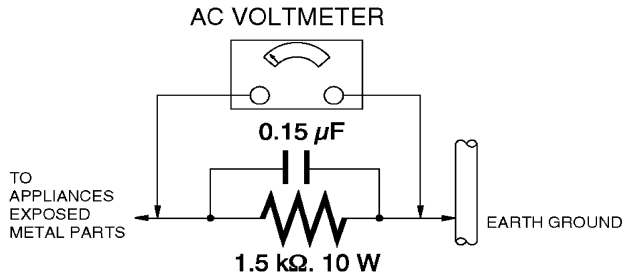

Figure 1

1.4. How to Discharge the Capacitor on Flash PCB

CAUTION:

1. **Be sure to discharge the capacitor on FLASH PCB.**
2. **Be careful of the high voltage circuit on FLASH PCB when servicing.**

[Discharging Procedure]

1. Refer to the disassemble procedure and remove the necessary parts/unit.
2. Put the insulation tube onto the lead part of Resistor (ERG5SJ102:1kΩ /5W).
   (an equivalent type of resistor may be used.)
3. Put the resistor between both terminals of capacitor on FLASH PCB for approx. 5 seconds.
4. After discharging confirm that the capacitor voltage is lower than 10V using a voltmeter.

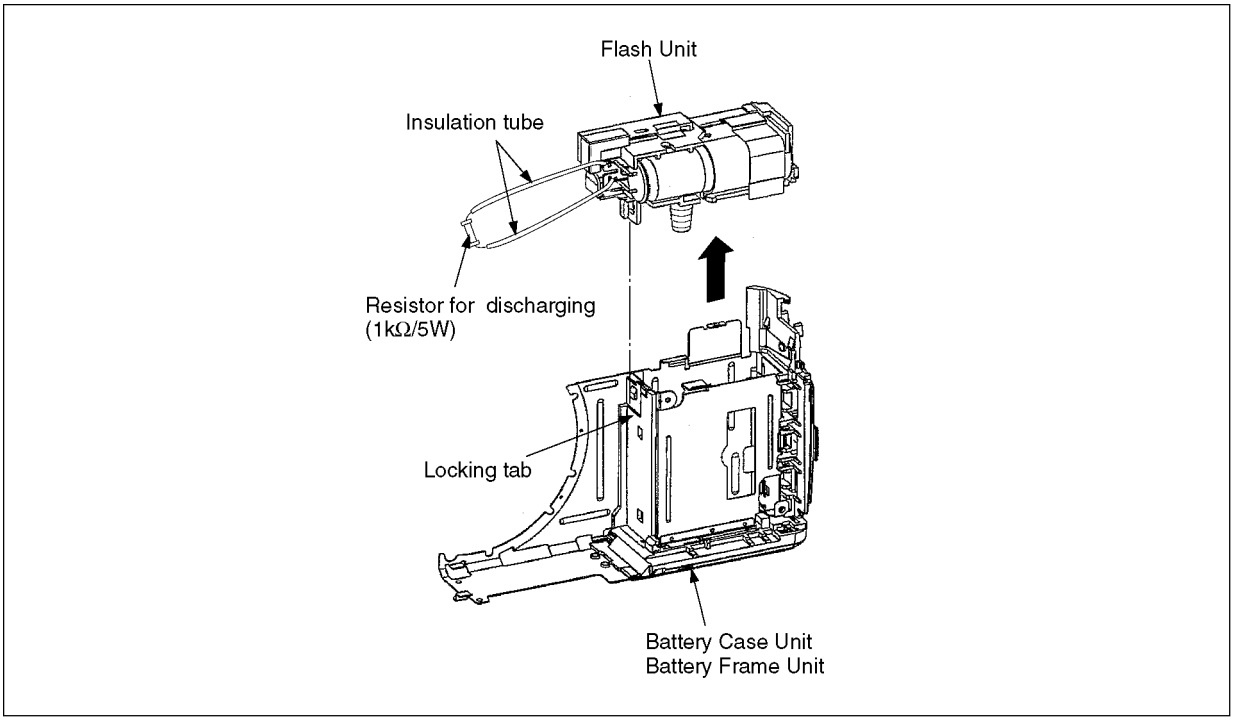

Fig. F1

2 Warning

2.1. Prevention of Electrostatic Discharge (ESD) to Electrostatic Sensitive (ES) Devices

Some semiconductor (solid state) devices can be damaged easily by static electricity. Such components commonly are called Electrostatically Sensitive (ES) Devices.

Examples of typical ES devices are CCD image sensor, IC (integrated circuits) and some field-effect transistors and semiconductor “chip” components.

The following techniques should be used to help reduce the incidence of component damage caused by electrostatic discharge (ESD).

1. Immediately before handling any semiconductor component or semiconductor-equipped assembly, drain off any ESD on your body by touching a known earth ground. Alternatively, obtain and wear a commercially available discharging ESD wrist strap, which should be removed for potential shock reasons prior to applying power to the unit under test.
2. After removing an electrical assembly equipped with ES devices, place the assembly on a conductive surface such as aluminum foil, to prevent electrostatic charge buildup or exposure of the assembly.
3. Use only a grounded-tip soldering iron to solder or unsolder ES devices.
4. Use only an antistatic solder removal device. Some solder removal devices not classified as antistatic (ESD protected) can generate electrical charge sufficient to damage ES devices.
5. Do not use freon-propelled chemicals. These can generate electrical charges sufficient to damage ES devices.
6. Do not remove a replacement ES device from its protective package until immediately before you are ready to install it. (Most replacement ES devices are packaged with leads electrically shorted together by conductive foam, aluminum foil or comparable conductive material).
7. Immediately before removing the protective material from the leads of a replacement ES device, touch the protective material to the chassis or circuit assembly into which the device will be installed.
   CAUTION:
   Be sure no power is applied to the chassis or circuit, and observe all other safety precautions.
8. Minimize bodily motions when handling unpackaged replacement ES devices. (Otherwise harmless motion such as the brushing together of your clothes fabric or the lifting of your foot from a carpeted floor can generate static electricity (ESD) sufficient to damage an ES device).

2.2. How to Recycle the Lithium Ion Battery (U.S. Only)

ENGLISH

A lithium ion/polymer battery that is recyclable powers the product you have purchased. Please call 1-800-8-BATTERY for information on how to recycle this battery.

FRANÇAIS

L’appareil que vous vous êtes procuré est alimenté par une batterie au lithium-ion/polymère recyclable. Pour des renseignements sur le recyclage de la batterie, veuillez composer le 1-800-8-BATTERY.

2.3. Caution for AC Cord (For EB/GC/SG)

2.3.1. Information for Your Safety

IMPORTANT

Your attention is drawn to the fact that recording of pre-recorded tapes or discs or other published or broadcast material may infringe copyright laws.

WARNING

To reduce the risk of fire or shock hazard, do not expose this equipment to rain or moisture.

CAUTION

To reduce the risk of fire or shock hazard and annoying interference, use the recommended accessories only.

FOR YOUR SAFETY

DO NOT REMOVE THE OUTER COVER

To prevent electric shock, do not remove the cover. No user serviceable parts inside. Refer servicing to qualified service personnel.

2.3.2. Caution for AC Mains Lead

For your safety, please read the following text carefully.

This appliance is supplied with a moulded three-pin mains plug for your safety and convenience.
A 5-ampere fuse is fitted in this plug.
Should the fuse need to be replaced please ensure that the replacement fuse has a rating of 5 amperes and it is approved by ASTA or BSI to BS1362
Check for the ASRA mark or the BSI mark on the body of the fuse.

ASTA mark	BSI mark

If the plug contains a removable fuse cover you must ensure that it is refitted when the fuse is replaced.
If you lose the fuse cover, the plug must not be used until a replacement cover is obtained.
A replacement fuse cover can be purchased from your local Panasonic Dealer.

If the fitted moulded plug is unsuitable for the socket outlet in your home then the fuse should be removed and the plug cut off and disposed of safety.
There is a danger of severe electrical shock if the cut off plug is inserted into any 13-ampere socket.

If a new plug is to be fitted please observe the wiring code as shown below.
If in any doubt, please consult a qualified electrician.

2.3.2.1. Important

The wires in this mains lead are coloured in accordance with the following code:

Blue	Neutral
Brown	Live

As the colours of the wires in the mains lead of this appliance may not correspond with the coloured markings identifying the terminals in your plug, proceed as follows:

The wire which is coloured BLUE must be connected to the terminal in the plug which is marked with the letter N or coloured BLACK.

The wire which is coloured BROWN must be connected to the terminal in the plug which is marked with the letter L or coloured RED.

Under no circumstances should either of these wires be connected to the earth terminal of the three pin plug, marked with the letter E or the Earth Symbol.

Earth Symbol	⏚

2.3.2.2. Before Use

remove the Connector Cover as follows.

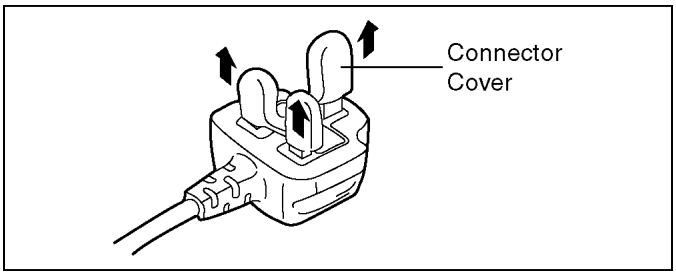

2.3.2.3. How to Replace the Fuse

1. Remove the Fuse Cover with a screwdriver.

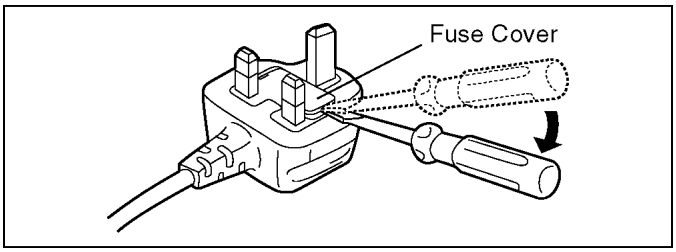

2. Replace the fuse and attach the Fuse cover.

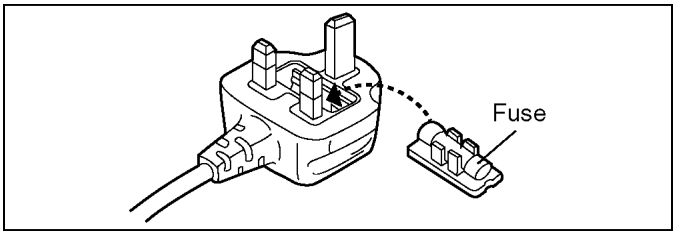

2.4. How to Replace the Lithium Battery

2.4.1. Replacement Procedure

1. Remove the Top Operation PCB. (Refer to Disassembly Procedures.)
2. Remove the Lithium battery (Ref. No. B9901 at component side of Top Operation PCB) and then replace it into new one.

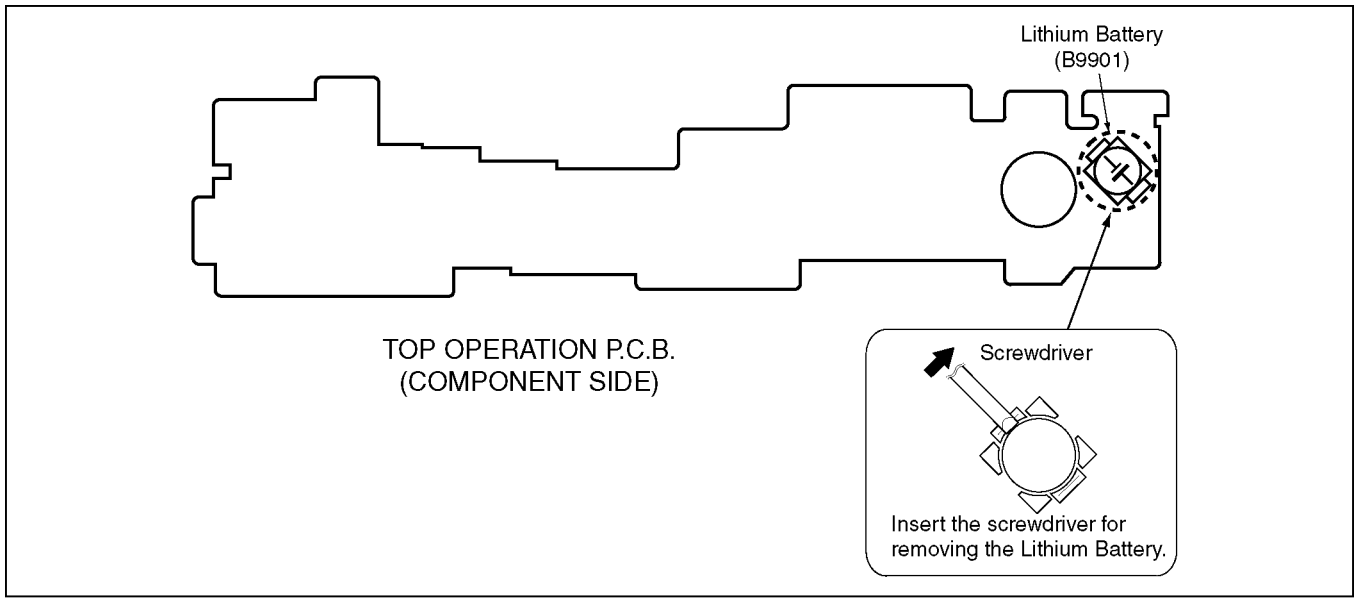

Note:

The lithium battery is a critical component.
(Type No.: ML-421S/ZT **Manufactured by Matsushita Battery Industrial Co.,Ltd.**)
It must never be subjected to excessive heat or discharge.
It must therefore only be fitted in equipment designed specifically for its use.
Replacement batteries must be of the same type and manufacture.
They must be fitted in the same manner and location as the original battery, with the correct polarity contacts observed.
Do not attempt to re-charge the old battery or re-use it for any other purpose.
It should be disposed of in waste products destined for burial rather than incineration.

(For English)

CAUTION

Danger of explosion if battery is incorrectly replaced.
Replace only with the same or equivalent type recommended by the manufacturer.
Dispose of used batteries according to the manufacturer's instructions.

(For German)

ACHTUNG

Explosionsgefahr bei falschem Anbringen der Batterie. Ersetzen Sie nur mit einem äquivalentem vom Hersteller empfohlenem Typ.
Behandeln Sie gebrauchte Batterien nach den Anweisungen des Herstellers.

(For French)

MISE EN GARDE

Une batterie de remplacement inappropriée peut exploser. Ne remplacez qu'avec une batterie identique ou d'un type recommandé par le fabricant. L'élimination des batteries usées doit être faite conformément aux instructions du manufacturier.

NOTE:

Above caution is applicable for a battery pack which is for DMC-TZ5/TZ15 series, as well.

3 Service Navigation

3.1. Introduction

This service manual contains technical information, which will allow service personnel's to understand and service this model.
Please place orders using the parts list and not the drawing reference numbers.
If the circuit is changed or modified, the information will be followed by service manual to be controlled with original service manual.

3.2. General Description About Lead Free Solder (PbF)

The lead free solder has been used in the mounting process of all electrical components on the printed circuit boards used for this equipment in considering the globally environmental conservation.
The normal solder is the alloy of tin (Sn) and lead (Pb). On the other hand, the lead free solder is the alloy mainly consists of tin (Sn), silver (Ag) and Copper (Cu), and the melting point of the lead free solder is higher approx.30 °C (86 °F) more than that of the normal solder.

Definition of PCB Lead Free Solder being used

The letter of PbF is printed either foil side or components side on the PCB using the lead free solder. (See right figure)	PbF

Service caution for repair work using Lead Free Solder (PbF)

- The lead free solder has to be used when repairing the equipment for which the lead free solder is used.
- (Definition: The letter of PbF is printed on the PCB using the lead free solder.)
- To put lead free solder, it should be well molten and mixed with the original lead free solder.
- Remove the remaining lead free solder on the PCB cleanly for soldering of the new IC.
- Since the melting point of the lead free solder is higher than that of the normal lead solder, it takes the longer time to melt the lead free solder.
- Use the soldering iron (more than 70W) equipped with the temperature control after setting the temperature at 350±30 degrees C (662±86 °F).

Recommended Lead Free Solder (Service Parts Route.)

- The following 3 types of lead free solder are available through the service parts route.
  RFKZ03D01K----------(0.3mm 100g Reel)
  RFKZ06D01K----------(0.6mm 100g Reel)
  RFKZ10D01K----------(1.0mm 100g Reel)

Note

* Ingredient: tin (Sn) 96.5%, silver (Ag) 3.0%, Copper (Cu) 0.5%, Cobalt (Co) / Germanium (Ge) 0.1 to 0.3%

3.3. Important Notice 1:(Other than U.S.A. and Canadian Market)

1. The service manual does not contain the following information, because of the impossibility of servicing at component level without concerned equipment/facilities.
   a. Schematic diagram, Block Diagram and PCB layout of MAIN PCB and SUB PCB.
   b. Parts list for individual parts for MAIN PCB and SUB PCB.
   When a part replacement is required for repairing MAIN PCB and/or SUB PCB, replace as an assembled parts. (MAIN PCB/SUB PCB)
2. The following category is/are recycle module part. please send it/them to Central Repair Center.
   - MAIN PCB (VEP56063A)
   - SUB PCB (VEP51020A)

3.4. How to Define the Model Suffix (NTSC or PAL model)

There are eight kinds of DMC-TZ5/TZ15, regardless of the colours.

- a) DMC-TZ5 (Japan domestic model.)
- b) DMC-TZ5P/PC
- c) DMC-TZ5EB/EF/EG/E
- d) DMC-TZ5EE
- e) DMC-TZ15GD
- f) DMC-TZ15GT
- g) DMC-TZ15GN
- h) DMC-TZ5PL/PR/SG, TZ15GC/GK/GJ

(DMC-TZ5S is exclusively Japan domestic model.)

What is the difference is that the “INITIAL SETTINGS” data which is stored in Flash ROM mounted on Main PCB.

3.4.1. Defining methods

To define the model suffix to be serviced, refer to the nameplate which is putted on the bottom side of the Unit.

a) DMC-TZ5 (Japan domestic model)

The nameplate for this model shows the following Safety registration mark.

b) DMC-TZ5P/PC

The nameplate for these models show the following Safety registration mark.

c) DMC-TZ5EB/EF/EG/E

The nameplate for these models show the following Safety registration mark.

d) DMC-TZ5EE

The nameplate for this model show the following Safety registration mark.

e) DMC-TZ15GD

The nameplate for this model show the following Safety registration mark.

f) DMC-TZ15GT

The nameplate for this model show the following Safety registration mark.

g) DMC-TZ15GN

The nameplate for these models show the following Safety registration mark.

h) DMC-TZ5PL/PR/SG, TZ15GC/GK/GJ

The nameplate for these models do not show any above safety registration mark.

NOTE:

After replacing the MAIN PCB, be sure to achieve adjustment.

The adjustment instruction is available at “software download” on the “Support Information from NWBG/VDBG-PAVC” web-site in “TSN system”, together with Maintenance software.

3.4.2. INITIAL SETTINGS:

When you replace the Main PCB, be sure to perform the initial settings after achieving the adjustment by ordering the following procedure in accordance with model suffix of the unit.

1. IMPORTANT NOTICE:

Before proceeding Initial settings, be sure to read the following CAUTIONS.

CAUTION 1 (Initial Settings)

DO NOT select "NONE(JAPAN)" or "P"(North America) if need to select "EG/E/PL/GD/GC/SG/GT/GK/EF/EB/EE/GN/PR/GJ and PC".
Otherwise, once "NONE(JAPAN)" or "P"(North America) are selected. "EG/E/PL/GD/GC/SG/GT/GK/EF/EB/EE/GN/PR/GJ and PC" will not displayed, thus, RE-Settings (changing area) can not be made.

CAUTION 2 (Picture back up from "Built-in Memory")

This unit "Built-in Memory" for picture image data recording. (Approx. 50MB)
Be sure make picture data back up (i.e., Copying to SD memory card), before proceeding "INITIAL SETTING".
Once "INITIAL SETTING" has been carried out, all image data stored at "Built-in Memory" is erased.

2. PROCEDURES:

- Preparation. Proceed the picture back up from the unit (Refer to above "CAUTION 2")
- **Step 1. The temporary cancellation of initial setting:**
  Set the REC/PLAY switch to “[Recording]”.
  Set the mode dial to “[Normal picture mode] (Red camera mark)”.
  While keep pressing [E. zoom switch] and “[UP] of Cross Key” simultaneously, turn the Power on.
- **Step 2. The cancellation of initial setting:**
  Set the REC/PLAY switch to “[Playback]”.
  Press [E. zoom switch] and “[UP] of Cross Key” simultaneously, then turn the Power off.
- **Step 3. Turn the Power on:**
  Set the REC/PLAY switch to “[Recording]”.
  Set the mode dial to “[Normal picture mode] (Red camera mark)”, and then turn the Power on.
- **Step 4. Display the INITIAL SETTING:**
  While keep pressing [MENU] and “[RIGHT] of Cross Key” simultaneously, turn the Power off.

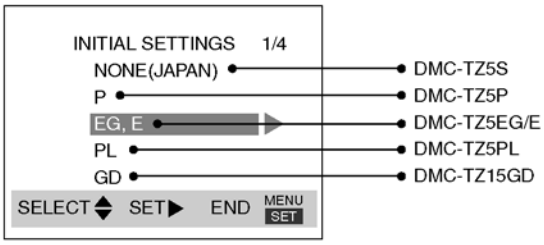

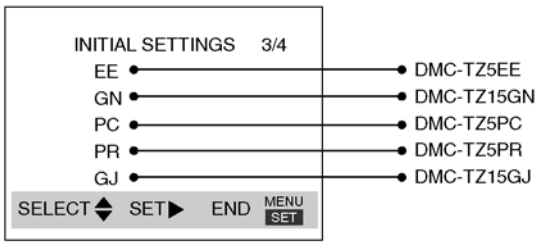

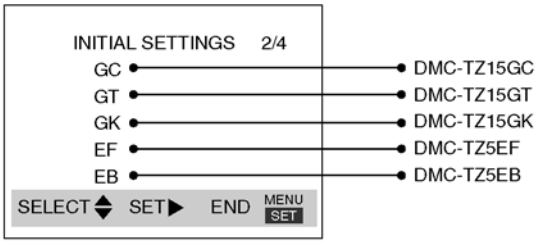

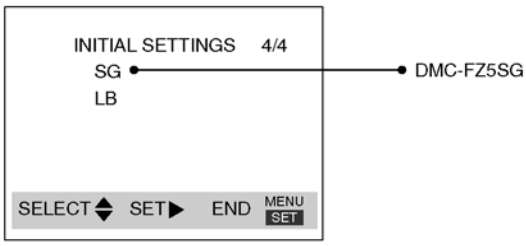

- **Step 5. Set the INITIAL SETTING: (Refer to “CAUTION 1”)**

[Caution for before settings]

Once "NONE(JAPAN)" (Area for Japan) or "P" (Area for North America) is selected with "INITIAL SETTINGS", other areas will not displayed even if "INITIAL SETTINGS" menu is displayed again, thus, the area can not be changed.
Select the area carefully.

Select the area with pressing “[UP]/[DOWN] of Cross Key”, and then press the “[RIGHT] of Cross Key”.

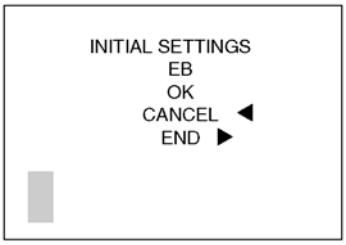

The only set area is displayed, and then press the “[RIGHT] of Cross key” after confirmation.
(The unit is powered off automatically.)
Confirm the display of “PLEASE SET THE CLOCK” in English when the unit is turned on again.

- **Step 6. CONFIRMATION:**

The display shows “PLEASE SET THE CLOCK” when turn the Power on again.
When the unit is connected to PC with USB cable, it is detected as removable media.
(When the “GT” or “GK” model suffix is selected, the display shows “PLEASE SET THE CLOCK” in Chinese.)

1) As for your reference Default setting condition is given in the following table.

- **Default setting (After “INITIAL SETTINGS”)**

	MODEL	VIDEO OUTPUT	LANGUAGE	DATE	REMARKS
a)	DMC-TZ5S	NTSC	Japanese	Year/Month/Date	
b)	DMC-TZ5P/PC/PL	NTSC	English	Month/Date/Year	
c)	DMC-TZ5EB/EG/E/SG/PR DMC-TZ15GC/GN/GJ	PAL	English	Date/Month/Year	
d)	DMC-TZ5EF	PAL	French	Date/Month/Year	
e)	DMC-TZ5EE	PAL	Russian	Date/Month/Year	
f)	DMC-TZ15GK	PAL	Chinese (simplified)	Year/Month/Date	
g)	DMC-TZ15GT	NTSC	Chinese (traditional)	Year/Month/Date	
h)	DMC-TZ15GD	NTSC	Korean	Year/Month/Date	

4 Specifications

Power Source	DC 5.1 V
Power Consumption	When recording: 1.3 W When playing back: 0.6 W
Camera effective pixels	9,100,000 pixels
Image sensor	1/2.33” CCD, total pixel number 10,700,000 pixels Primary color filter
Lens	Optical 10 x zoom f=4.7 mm to 47 mm (35 mm film camera equivalent: 28 mm to 280 mm)/F3.3 to F4.9
Digital zoom	Max.4 x
Extended optical zoom	Max. 16.9 x
Focus	Normal/Macro Face detection/9-area-focusing/3-area-focusing (High speed)/ 1-area-focusing (High speed)/1-area-focusing/Spot-focusing
Focus range	
Normal/Motion picture	50 cm (1.64 feet) (Wide)/2 m (6.57 feet) (Tele) to ∞
Macro/Intelligent Auto/ Clipboard	5 cm (0.17 feet) (Wide)/1 m (3.28 feet) (Tele) to ∞ (2 m (6.57 feet) unless max.T)
Scene mode	There may be difference in above settings.
Shutter system	Electronic shutter + Mechanical shutter
Motion picture recording	1280 × 720 pixels* 848 × 480 pixels* /640 × 480 pixels* /320 × 240 pixels (* Only when using an SD Memory Card) 30,15 , or 10 frames/second with audio.
Burst recording	
Burst speed	2.5 pictures/second (Burst), Approx. 2 pictures/second (Unlimited)
Number of recordable pictures	Max. 5 pictures (Standard), max. 3 pictures (Fine), Depends on the remaining capacity of the built-in memory or the card (Unlimited).
Hi-speed burst	
Burst speed	Approx. 6 pictures/second
Number of recordable pictures	Approx. 20 pictures (When using the built-in memory, immediately after formatting) Max. 100 pictures (When using a card, differs depending on the type of card and the recording conditions)
ISO sensitivity	AUTO/100/200/400/800/1600 [HIGH SENS.] mode: 1600 - 6400
Shutter speed	8 to 1/2000th [STARRY SKY] mode: 15 seconds, 30 seconds, 60 seconds
White balance	AUTO/Daylight/Cloudy/Shade/Halogen/White set
Exposure (AE)	AUTO (Program AE) Exposure compensation (1/3 EV Step, -2 EV to +2 EV)
Metering mode	Multiple/Center weighted/Spot
LCD monitor	3.0” low-temperature polycrystalline TFT LCD (Approx. 460,800 dots) (field of view ratio about 100 %)

Flash	Flash range: (ISO AUTO) Approx.60 cm (1.97 feet) to 5.3 m (17.4 feet) (Wide) AUTO, AUTO/Red-eye reduction, Forced flash ON (Forced flash ON/ Red-eye reduction), Slow sync./Red-eye reduction, Forced flash OFF
Microphone	Monaural
Speaker	Monaural
Recording media	Built-in Memory (Approx. 50 MB)/SD Memory Card/SDHC Memory Card/ MultiMediaCard (Still pictures only)
Picture size	
Still picture	When the aspect ratio setting is [4:3] 3456 × 2592 pixels / 3072 × 2304 pixels / 2560×1920 pixels / 2048×1536 pixels / 1600 × 1200 pixels / 640 × 480 pixels
	When the aspect ratio setting is [3:2] 3552 × 2368 pixels / 3072 × 2048 pixels / 2560 × 1712 pixels / 2048 × 1360 pixels
	When the aspect ratio setting is [16:9] 3712 × 2088 pixels / 3072 × 1728 pixels / 2560 × 1440 pixels / 1920 × 1080 pixels
Motion pictures (* Only when using an SD Memory Card)	1280 × 720 pixels* /848 × 480 pixels* / 640 × 480 pixels* /320 × 240 pixels
Quality	Fine/Standard
Recording file format	
Still Picture	JPEG (based on Design rule for Camera File system, based on Exif 2.21 standard)/DPOF corresponding
Still pictures with audio	JPEG (based on Design rule for Camera File system, based on Exif 2.21 standard) + QuickTime
Motion pictures	QuickTime Motion JPEG
Interface	Digital: USB 2.0 (High Speed) Analog video/audio: NTSC/PAL Composite (Switched by menu), Component/Audio line output (monaural)
Terminal	COMPONENT OUT: Dedicated jack (10 pin) DIGITAL/AV OUT: Dedicated jack (8 pin) DC IN: Dedicated jack (2 pin)
Dimensions (excluding the projection part)	Approx. 103.3 mm (W) × 59.3 mm (H) × 36.5 mm (D) [4.07” (W) × 2.33” (H) × 1.44” (D)]
Mass	Excluding card and battery: Approx. 214 g (7.5 oz) With card and battery: Approx. 240 g (8.5 oz)
Operating temperature	0 °C to 40 °C (32 °F to 104 °F)
Operating humidity	10 % to 80 %

Battery charger
(Panasonic DE-A45B): Information for your safety

Output	CHARGE 4.2 V ⎓ 0.8 A
Input	110 V to 240 V 50/60Hz, 0.2 A

Equipment mobility: Movable
Battery Pack (lithium-ion)
(Panasonic CGA-S007A): Information for your safety

Voltage/capacity	3.7 V 1000 mAh

5 Location of Controls and Components

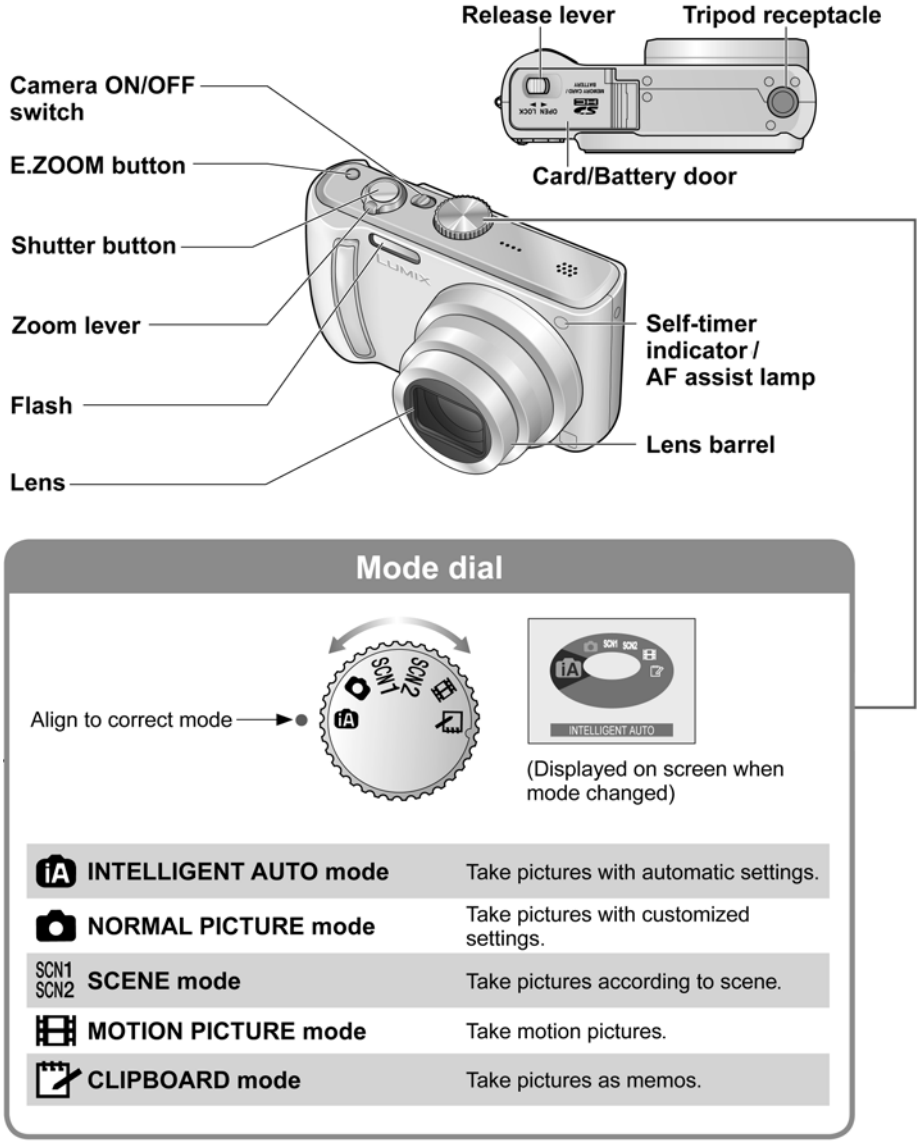

iA INTELLIGENT AUTO mode	Take pictures with automatic settings.
NORMAL PICTURE mode	Take pictures with customized settings.
SCN1 SCN2 SCENE mode	Take pictures according to scene.
MOTION PICTURE mode	Take motion pictures.
CLIPBOARD mode	Take pictures as memos.

● This manual is based on the DMC-TZ5 model. Product illustrations and screens may vary.

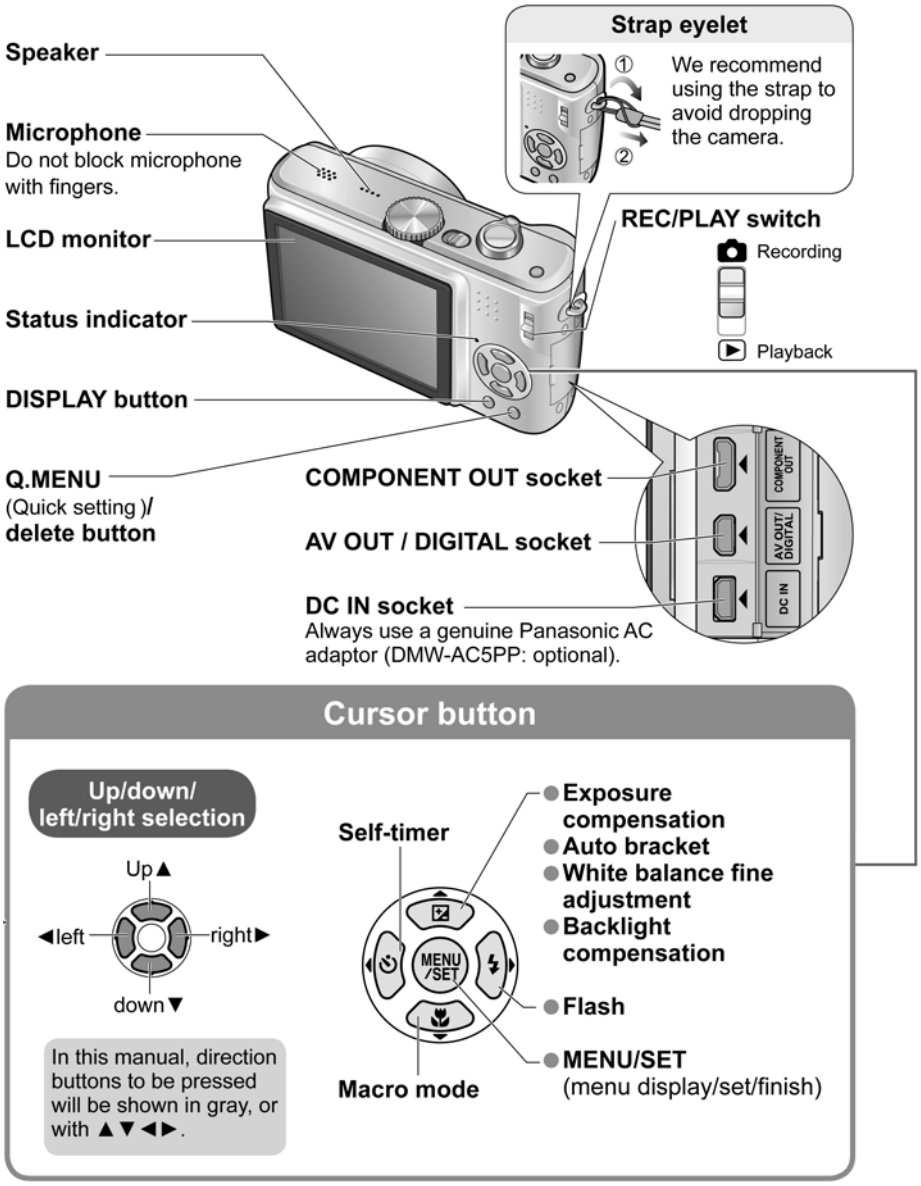

● This manual is based on the DMC-TZ5 model. Product illustrations and screens may vary.

6 Service Mode

6.1. Error Code Memory Function

1. **General description**
   This unit is equipped with history of error code memory function, and can be memorized 16 error codes in sequence from the latest. When the error is occurred more than 16, the oldest error is overwritten in sequence.
   The error code is not memorized when the power supply is shut down forcibly (when the unit is powered on by the battery, the battery is pulled out) because the error code is memorized to FLASH ROM when the unit is powered off.
2. **How to display**
   The error code can be displayed by the following procedure:
   Before perform the error code memory function, connect the AC adaptor or insert the battery.
   (Since this unit has built-in memory, this error code memory function can be performed without inserting SD memory card.)

- **1. The temporary cancellation of initial setting:**
  Set the mode dial to “[Normal picture mode] (Red camera mark)”.
  While keep pressing [E. zoom switch] and “[UP] of Cross Key” simultaneously, turn the Power on.
- **2. The display of error code:**
  Press [E. zoom switch], [MENU] and “[LEFT] of Cross Key” simultaneously with the step 1 condition.
  The display is changed as shown below when the above buttons is pressed simultaneously.
  Normal display → Error code display → Operation history display → Normal display → .....

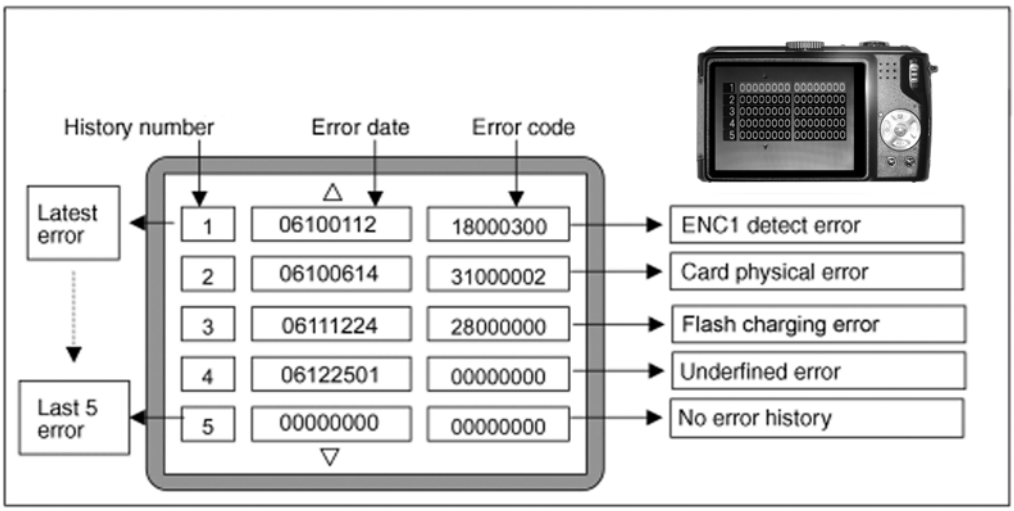

Example of Error Code Display

- **3. The change of display:**
  The error code can be memorized 16 error codes in sequence, however it is displayed 5 errors on the LCD.
  Display can be changed by the following procedure:
  “[UP] or [DOWN] of Cross Key” : It can be scroll up or down one by one.
  “[LEFT] or [RIGHT] of Cross Key” : It can be scroll up or down every 5 error.
- **4. How to read the error date:**
  The error date code is displayed “year, month, day, time” in order.
  (Example: “08030216” → 16 hours 2nd MAR. 2008)
  Error date information is acquired from "Clock setting" setting, it is displayed as “00000000”.
  information when the error occurs. When the clock is not
- **5. How to read the error code:**
  One error code is displayed for 8 bit, the contents of error codes is indicated the table as shown below.

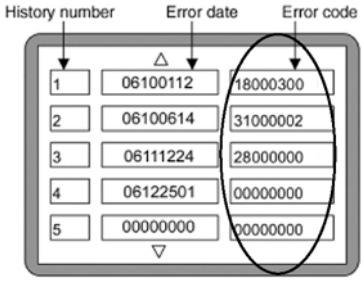

Attribute	Main item	Sub item	Error code		Contents (Upper)
			High 4bits	Low 4 bits	Check point (Lower)
LENS	Lens drive	OIS	18*0	1000	PSD (X) error. Hall element (X axis) position detect error in OIS unit.
					OIS Unit
				2000	PSD (Y) error. Hall element (Y axis) position detect error in OIS unit.
					OIS Unit
				3000	GYRO (X) error. Gyro (IC7101: X axis) detect error on Main P.C.B..
					IC7101 (Gyro element) or IC6001 (VENUS 4)
				4000	GYRO (Y) error. Gyro (IC7101: Y axis) detect error on Main P.C.B..
					IC7101 (Gyro element) or IC6001 (VENUS 4)
				5000	MREF error (Reference voltage error).
					IC9101 (LENS drive) or IC6001 (VENUS 4)
				6000	Drive voltage (X) error.
					VENUS 4 AD value error, LENS Unit, LENS flex breaks etc.
				7000	Drive voltage (Y) error.
					VENUS 4 AD value error, LENS Unit, LENS flex breaks etc.
		C.B./Zoom		0010	HP Low detect error. (HP ENC. detects always low. (Fully retracted connection.))
					Zoom motor, ABS ENC., and/or circuit failure. Zoom deadlock (Exit side).
				0020	HP Low detect error. (HP ENC. detects always high. (Exit connection.))
					Zoom motor, ABS ENC., and/or circuit failure. Zoom deadlock (Retract side).
				0030	Zoom ENC. detect error. (No signal is supplied from Encoder located on Zoom Motor.)
				0040 0050	Zoom motor, ABS ENC., and/or circuit failure Zoom deadlock.
		Focus		0001	HP Low detect error (Focus encoder always Low detect error).
					FP9001-(33) signal line or IC6001 (VENUS 4)
				0002	HP High detect error (Focus encoder always High detect error).
					FP9001-(41) signal line or IC6001 (VENUS 4)
		Lens	18*1	0000	Power ON time out error.
					Lens drive system
			18*2	0000	Power OFF time out error.
					Lens drive system
	Adj.History	OIS	19*0	2000	OIS adj. Yaw direction amplitude error (small)
				3000	OIS adj. Pitch direction amplitude error (small)
				4000	OIS adj. Yaw direction amplitude error (large)
				5000	OIS adj. Pitch direction amplitude error (large)
				6000	OIS adj. MREF error
				7000	OIS adj. time out error
				8000	OIS adj. Yaw direction off set error
				9000	OIS adj. Pitch direction off set error
				A000	OIS adj. Yaw direction gain error
				B000	OIS adj. Pitch direction gain error
				C000	OIS adj. Yaw direction position sensor error
				D000	OIS adj. Pitch direction position sensor error
				E000	OIS adj. other error
HARD	VENUS A/D	Flash	28*0	0000	Flash charging error.
					IC6001-(AC17) signal line or Flash charging circuit
	FLASH ROM (EEPROM Area)	FLASH ROM (EEPROM Area)	2B*0	0001	EEPROM read error
					IC6002 (FLASH ROM)
				0002	EEPROM write error
					IC6002 (FLASH ROM)
	SYSTEM	RTC	2C*0	0001	SYSTEM IC initialize failure error
					Communication between IC6001 (VENUS 4) and IC9101 (SYSTEM)

Attribute	Main item	Sub item	Error code		Contents (Upper)
			High 4bits	Low 4 bits	Check point (Lower)
SOFT	CPU	Reset	30*0	0001 | 0007	NMI reset Non Mask-able Interrupt (30000001-30000007 are caused by factors)
	Card	Card	31*0	0001	Card logic error
					SD memory card data line or IC6001 (VENUS 4)
				0002	Card physical error
					SD memory card data line or IC6001 (VENUS 4)
				0004	Write error
					SD memory card data line or IC6001 (VENUS 4)
			39*0	0005	Format error
	CPU, ASIC hard	Stop	38*0	0001	Camera task finish process time out.
					Communication between Lens system and IC6001 (VENUS 4)
				0002	Camera task invalid code error.
					IC6001 (VENUS 4)
				0100	File time out error in recording motion image
					IC6001 (VENUS 4)
				0200	File data send error in recording motion image
					IC6001 (VENUS 4)
				0300	Single or burst recording brake time out.
	Operation	Power on	3B*0	0000	FLASHROM processing early period of camera during movement.
	Zoom	Zoom	3C*0	0000	Imperfect zoom lens processing.
					Zoom lens
			35*0	0001 | 0007	Software error. (0-7bit : command, 8-15bit : status)
			35*1	0000	Though record preprocessing is necessary, it is not called.
			35*2	0000	Though record preprocessing is necessary, it is not completed.

About "*" indication in the above table:

The third digit from the left is different as follows.

- In case of 0 (example: 18**0**01000)
  When the third digit from the left shows "0", this error occurred under the condition of INITIAL SETTINGS has been completed.
  It means that this error is occurred basically at user side.
- In case of 8 (example: 18**8**01000)
  When the third digit from the left shows "8", this error occurred under the condition of INITIAL SETTINGS has been released.
  (Example; Factory assembling-line before unit shipment, Service mode etc.)
  It means that this error is occurred at service side.

• **6. How to returned to Normal Display:**

Turn the power off and on, to exit from Error code display mode.

NOTE:

The error code can not be initialized.

7 Service Fixture & Tools

7.1. Service Fixture and Tools

The following Service Fixture and tools are used for checking and servicing this unit.

Resistor for Discharging **ERG5SJ102**	**Infinity Lens (Built-in Focus Chart)** **VFK1164TCM02**	**LIGHT BOX** **VFK1164TDVLB**
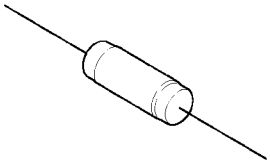 **An equivalent type of Resistor may be used.**	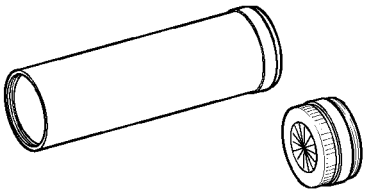 ※ **RFKZ0422** can be used.	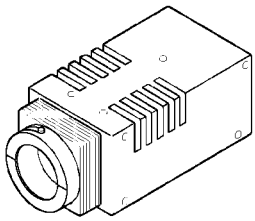 ※ with DC Cable
TR Chart **RFKZ0443**	**Lens Cleaning Kit (BK)** **VFK1900BK**	**Grease (for Lens)** **(for focus motor) RFKZ0472**
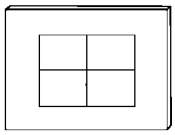	 *** Only supplied as 10 set/box.**	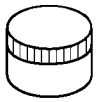

7.2. When Replacing the Main PCB

After replacing the MAIN PCB, be sure to achieve adjustment.
The adjustment instruction is available at “software download” on the “Support Information from NWBG/VDBG-PAVC” web-site in “TSN system”, together with Maintenance software.

7.3. Service Position

This Service Position is used for checking and replacing parts. Use the following Extension cables for servicing.

No.	Parts No.	Connection	Form
1	RFKZ0416	FP9001 (MAIN) - LENS UNIT	41PIN 0.3 FFC
2	RFKZ0363	FP9002 (MAIN) - TOP OPERATION UNIT	19PIN 0.5 FFC
3	VFK2024	FP9004 (MAIN) - LCD UNIT	51PIN 0.3 FFC
4	RFKZ0445	PP9001 (MAIN) - PS9801 (SUB)	100PIN B to B
5	VFK1951	FP9801 (SUB) - CCD UNIT	39PIN 0.3 FFC
6	VFK1175	FP9802 (SUB) - FP8001 (FLASH)	16PIN 0.5 FFC
7	VFK1974	FP9007 (MAIN) - LCD UNIT	4PIN 0.5 FFC

7.3.1. Extension Cable Connections

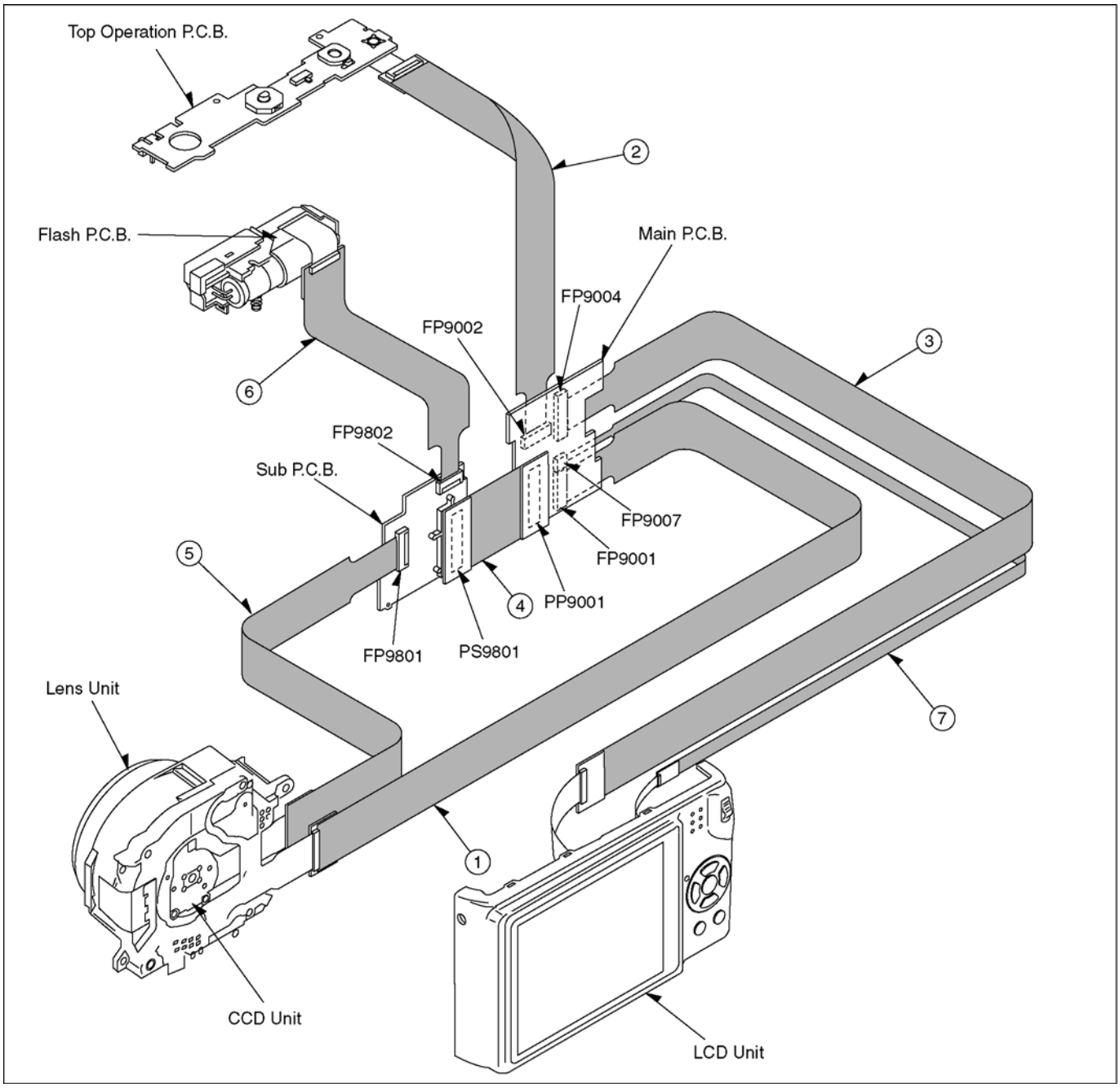

CAUTION-1. (When servicing FLASH PCB)

1. Be sure to discharge the capacitor on FLASH PCB.
   Refer to “HOW TO DISCHARGE THE CAPACITOR ON FLASH PCB”.
   The capacitor voltage is not lowered soon even if the AC Cord is unplugged or the battery is removed.
2. Be careful of the high voltage circuit on FLASH PCB.
3. DO NOT allow other parts to touch the high voltage circuit on FLASH PCB.

8 Disassembly and Assembly Instructions

8.1. Disassembly Flow Chart

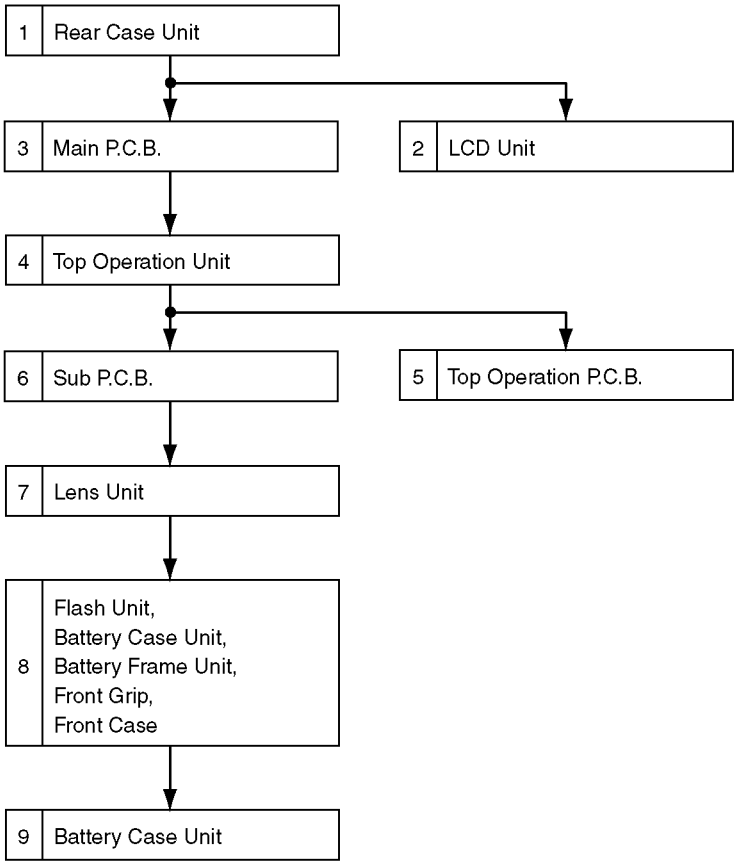

8.2. PCB Location

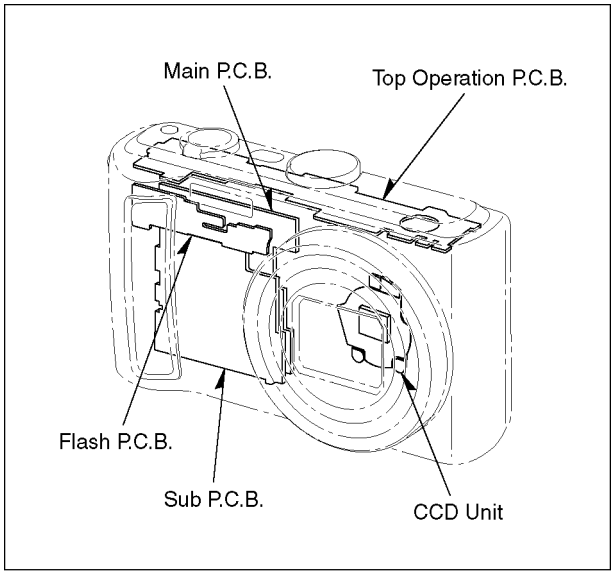

8.3. Disassembly Procedure

No.	Item	Fig.	Removal
1	Rear Case Unit	Fig.D1	Card
			Battery
			2 Screws (A)
			1 Screw (B)
			2 Screws (C)
			FP9004 (Flex)
			FP9007 (Flex)
			Rear Case Unit
2	LCD Unit	Fig.D2	5 Locking tabs
			LCD Unit
3	Main P.C.B. Unit,	Fig.D3	1 Locking tab
			Slide Guide
			Slide Knob
			FP9001 (Flex)
			FP9002 (Flex)
			PP9001 (Connector)
			Main P.C.B.
			PCB Spacer
4	Top Operation Unit	Fig.D4	Top Operation Unit
5	Top Operation P.C.B.	Fig.D5	2 Locking tabs
			AF Panel Light
			FP9902 (Flex)
			2 Screws (D)
			3 Locking tabs
			Top Operation P.C.B.
		Fig.D6	NOTE: (When Installing)
6	Sub P.C.B.	Fig.D7	1 Screw (E)
			PCB Plate
			FP9801 (Flex)
			FP9802 (Flex)
			2 Locking tabs
			Sub P.C.B.
7	Lens Unit	Fig.D8	2 Screws (F)
			1 Screw (G)
			Lens Unit
8	Flash Unit, Battery Case Unit, Battery Frame Unit, Front Grip, Front Case	Fig.D9	1 Screw (H)
			2 Screws (I)
			1 Screw (J)
			2 Screws (K)
		Fig.D10	2 Locking tabs
			Flash Unit
			Battery Case Unit
			Battery Frame Unit
			2 Locking tabs
			Front Grip
			Front Case
9	Battery Case Unit	Fig.D11	3 Locking tabs
			Battery Case Unit

8.3.1. Removal of the Rear Case Unit

NOTE:
When servicing and reassembling, remove the card and battery from the unit.

- Card
- Battery
- Screw(A) × 2
- Screw(B) × 1
- Screw(C) × 2
- FP9004 (Flex)
- FP9007 (Flex)

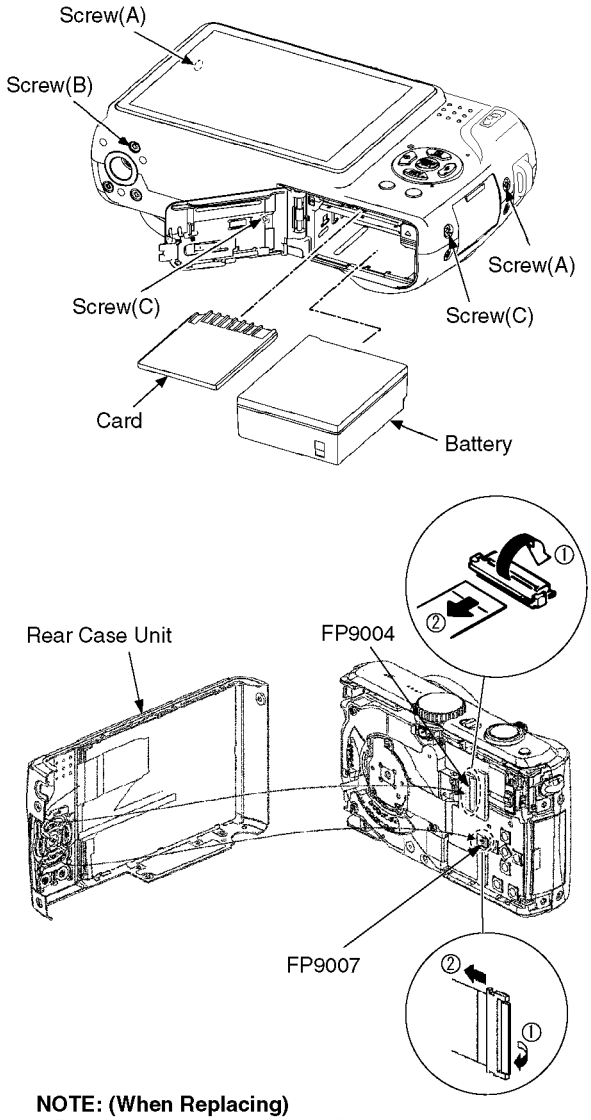

NOTE: (When Replacing)
- Take care not to damage the flex.
- When remove the flex, pull up the locking tab in the direction of arrow (1), and then remove the flex in the direction of arrow (2).

Screw (A)	Screw (B)	Screw (C)
3mm	5mm	2 mm
ⓈⓉ: SILVER	ⓈⓉ: SILVER	ⓈⓉ: SILVER
ⓀⒶⓉⒶ: BLACK	ⓀⒶⓉⒶ: BLACK	ⓀⒶⓉⒶ: BLACK

Fig. D1

8.3.2. Removal of the LCD Unit

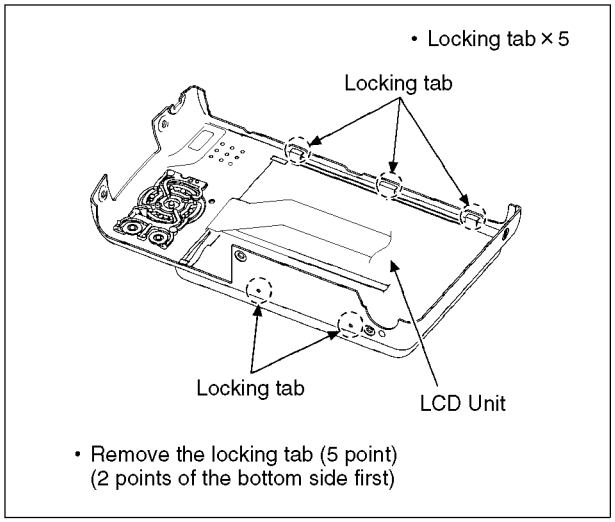

Fig. D2

8.3.3. Removal of the Main P.C.B.

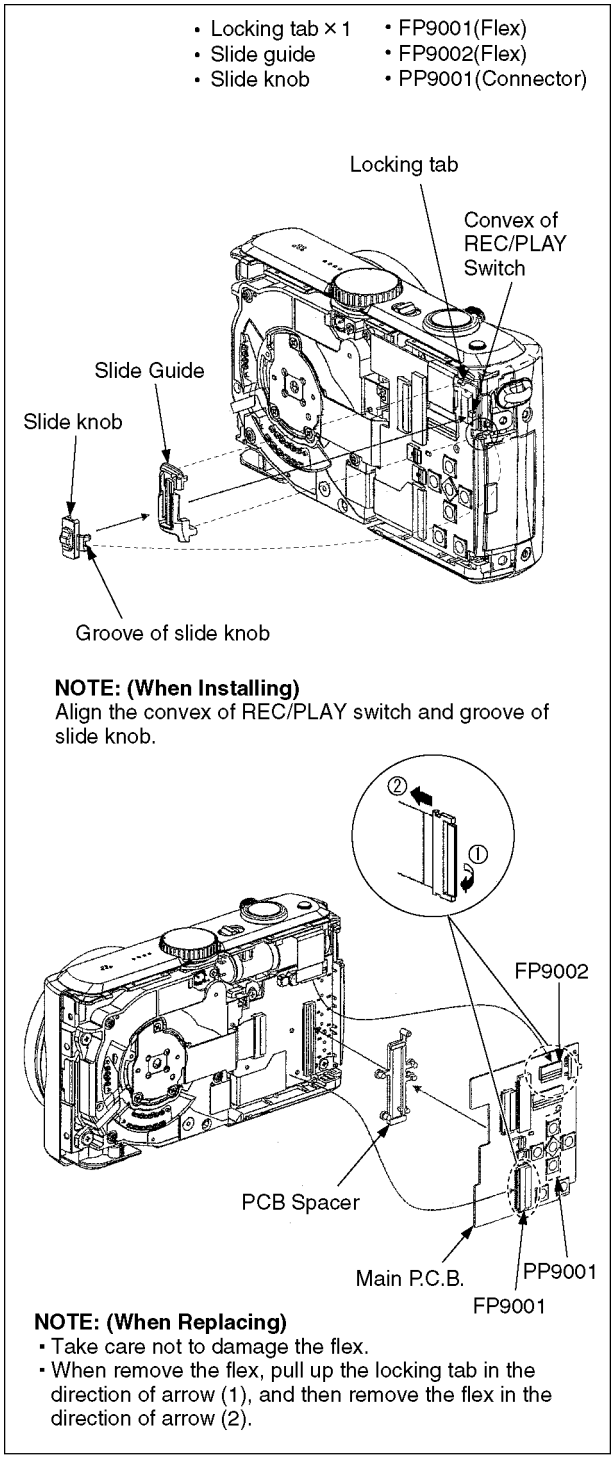

Fig. D3

8.3.4. Removal Top Operation Unit

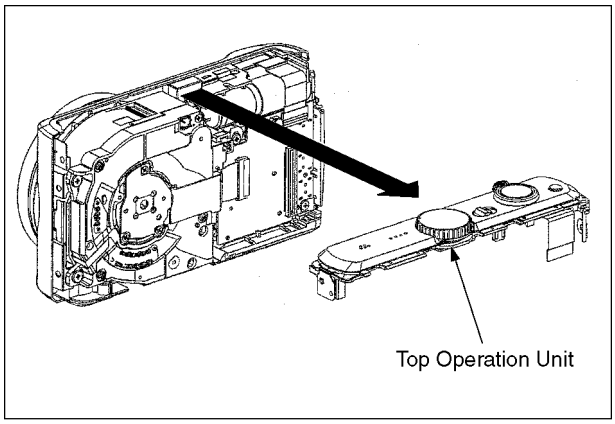

Fig. D4

8.3.5. Removal of the Top Operation P.C.B.

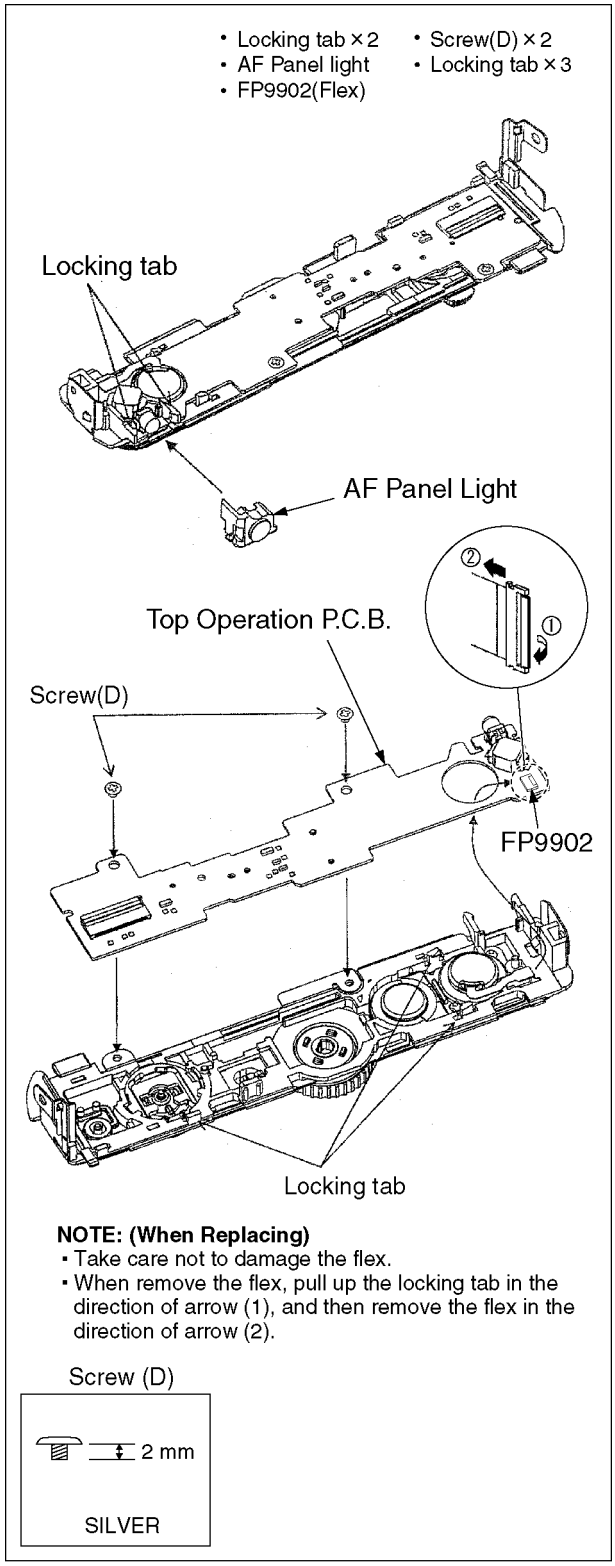

Fig. D5

NOTE: (When Installing)
Align the convex of power switch and groove power knob.
Align the convex of mode dial switch and groove of mode dial.
(Align the "D"cut part)

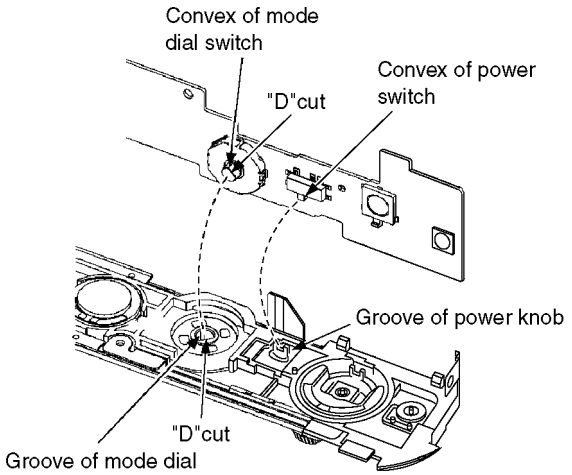

Fig. D6

8.3.6. Removal of the Sub P.C.B.

- Screw(E) × 1
- PCB Plate
- FP9801(Flex)
- FP9802(Flex)
- Locking tab × 1

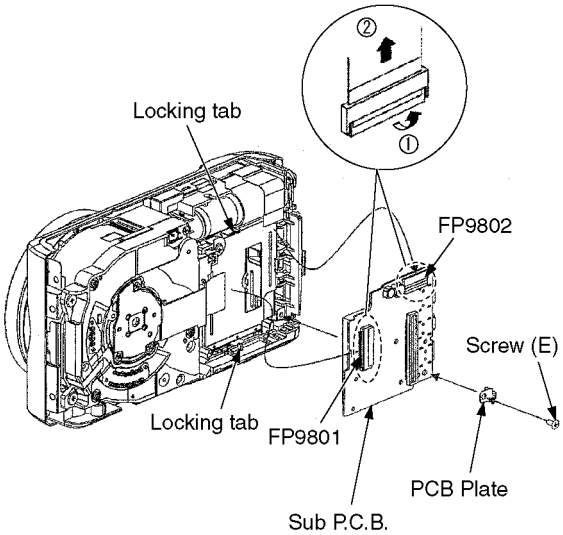

NOTE: (When Replacing)
- Take care not to damage the flex.
- When remove the flex, pull up the locking tab in the direction of arrow (1), and then remove the flex in the direction of arrow (2).

Screw (E)

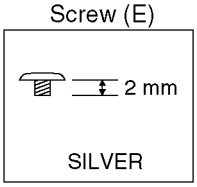

Fig. D7

8.3.7. Removal of the Lens Unit

- Screw(F) × 2
- Screw(G) × 1

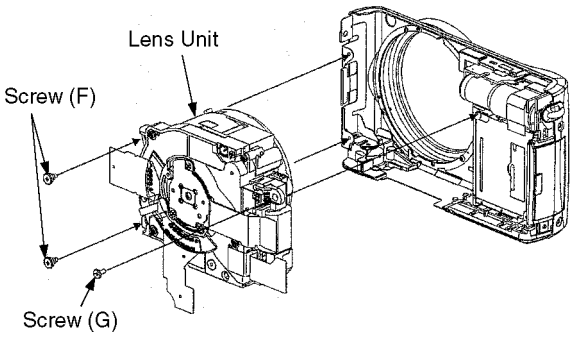

Screw (F)

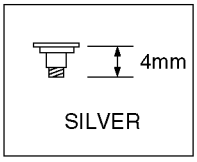

Screw (G)

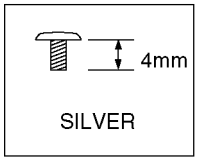

Fig. D8

8.3.8. Removal of the Flash Unit, Battery Case Unit, Battery Frame Unit, Front Grip and Front Case

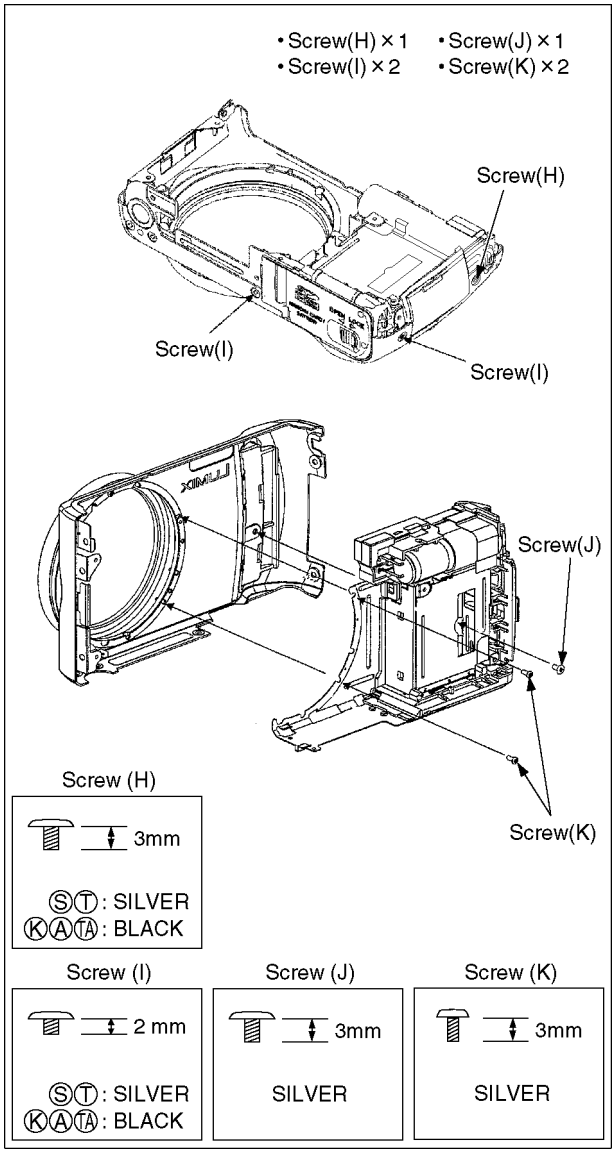

Fig. D9

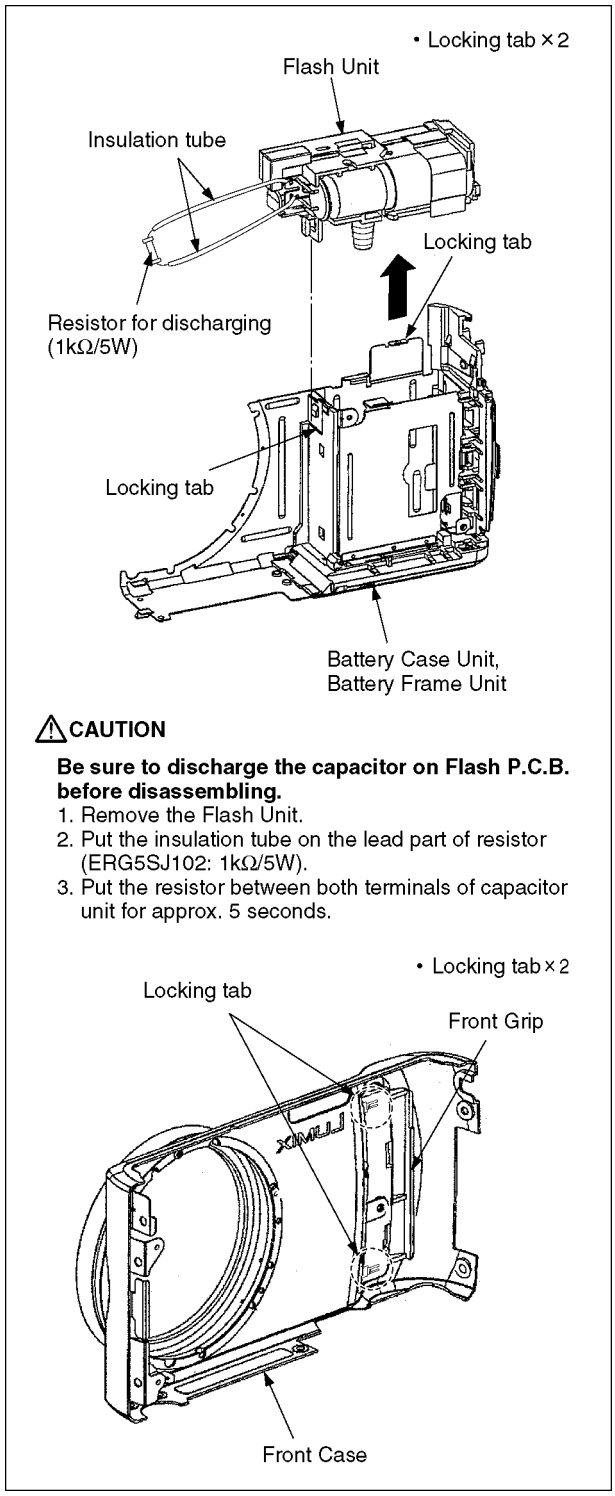

Fig. D10

8.3.9. Removal of the Battery Case Unit

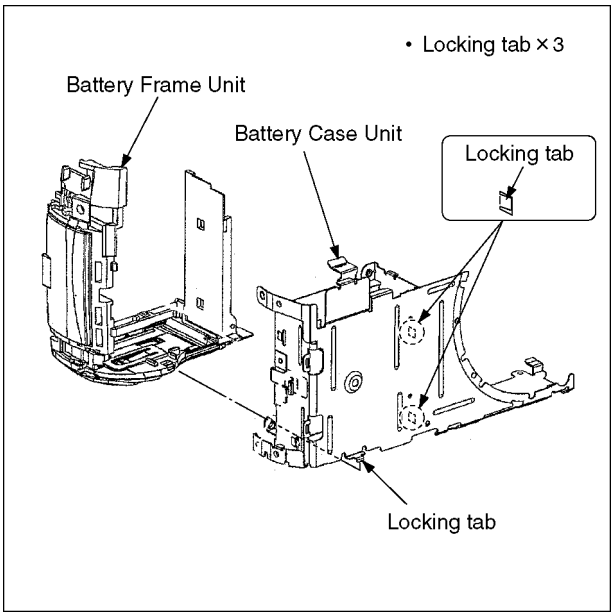

Fig. D11

NOTE: (When Assembling)

Be sure to confirm the following points when assembling.

- The Screw is tightened enough.
- Assembling conditions are fine. (No distortion, no illegal-space.)
- No dust and/or dirt on every Lens surfaces.
- LCD image is fine. (No dust and dirt on it, and no gradient images.)

8.4. Disassembly Procedure for the Lens

NOTE: When Disassembling and Assembling for the Lens

1. To minimize the possibility of the CCD being dirt, perform disassemble and/or assemble under the condition of the CCD is being mounted.
   Disassembling procedures for the CCD unit, refer to item 8.6.
2. Take care that the dust and dirt are not entered into the lens.
   In case of the dust is putted on the lens, blow off them by airbrush.
3. Do not touch the surface of lens.
4. Use lens cleaning KIT (BK)(VFK1900BK).
5. Apply the grease to the point where is shown to" Grease apply" in the figure.

8.4.1. Removal of the Zoom Motor Unit and Master Flange Unit

1. Unsolder (16 points).
2. Remove the libs (4 points).
3. Unscrew the 6 screws (A).
4. Remove the zoom motor unit.
5. Remove the master flange unit.

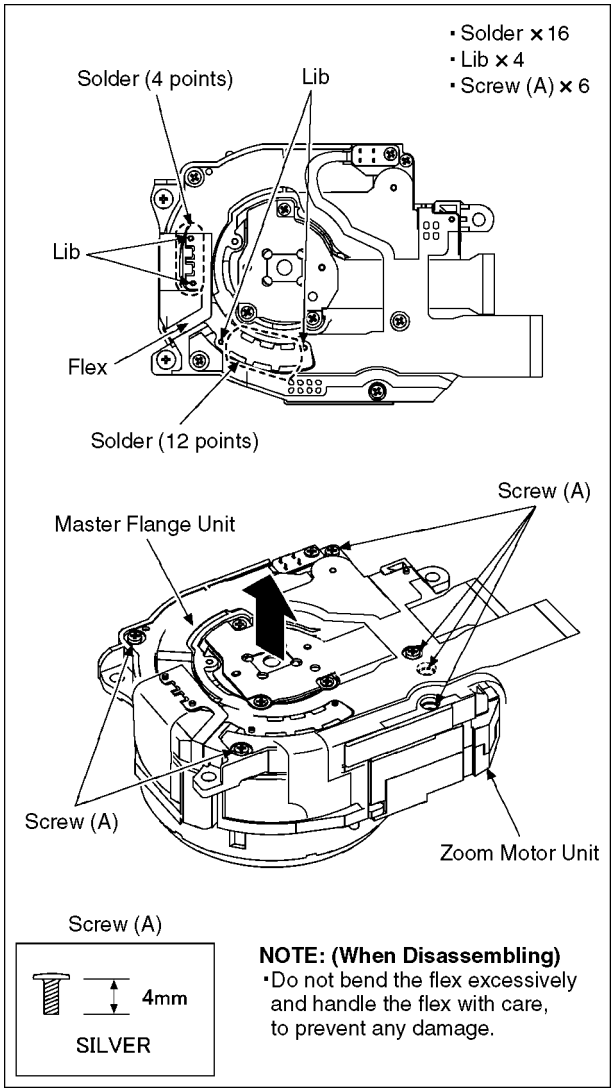

8.4.2. Removal of the Direct Frame, Both Side Cam, 1st Lens Frame/2nd Lens Frame/3rd Lens Frame, Penetration Cam and Drive Frame

- Push the penetration cam to the indicated by arrow from lens side, and then remove the unit of direct frame, both side cam, 1st lens frame/2nd lens frame/3rd lens frame, penetration cam and drive frame from the fixed frame unit.

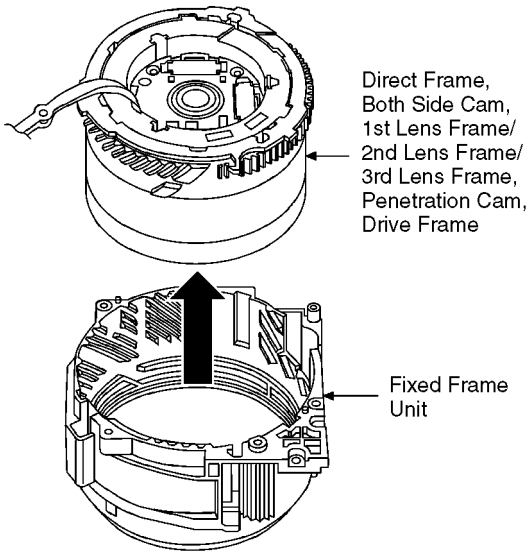

NOTE: (When Disassembling)
- When lift the lens part, take care not to put fingerprint of the lens.

IMPORTANT NOTICE:
Fixed Frame, Penetration Cam, Drive Frame, Both Side Cam do not repair at the single part of maintain original performance.
Using the repair part (Fix Cam Frame Unit) certainly, and then unit exchange.

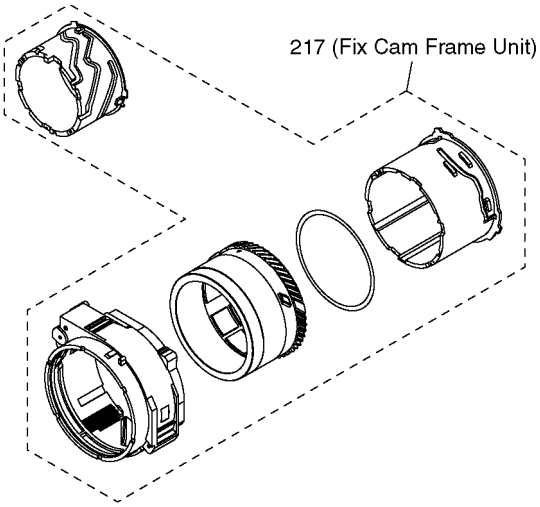

8.4.3. Removal of the Direct Frame, Both Side Cam and 1st Lens Frame/2nd Lens Frame/3rd Lens Frame

1. Turn the drive frame, and then Align the groove of drive frame and pin of 1st lens frame.

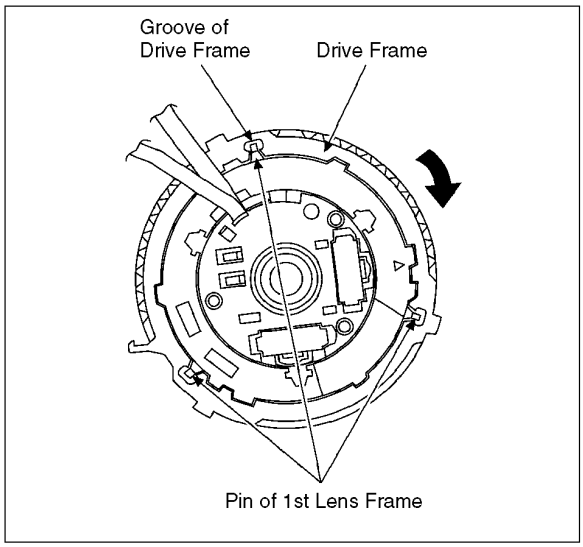

2. Push the 1st lens frame to the indicated by arrow from lens side, and then remove the unit of direct frame, both side cam and 1st lens frame/2nd lens frame/3rd lens frame from the penetration cam and drive frame.

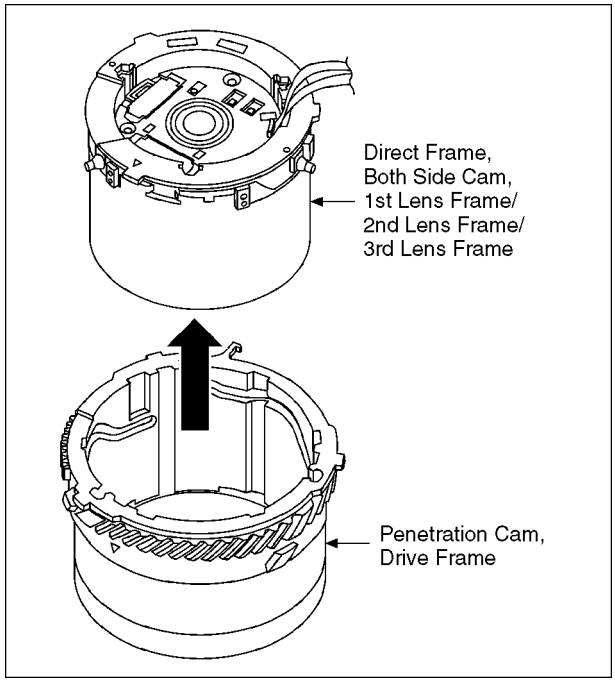

8.4.4. Removal of the Direct Frame, Both Side Cam and 2nd Lens Frame/3nd Lens Frame

- Turn to the indicated by arrow(1) while picking the pin, and then remove the unit of direct frame, both side cam and 2nd lens frame/3rd lens frame from the 1st lens frame.

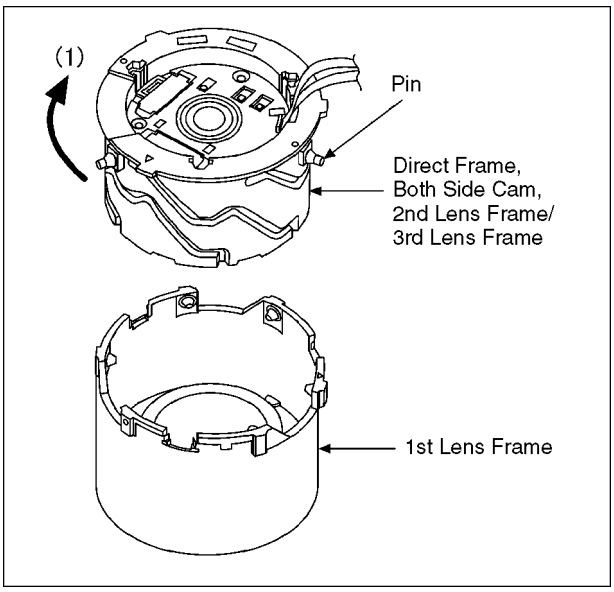

8.4.5. Removal of the 3rd Lens Frame and 2nd Lens Frame

1. Turn the direct frame, and then Align the groove of direct frame and groove of both side cam.
2. Remove the 3rd lens frame and 2nd lens frame from the direct frame, both side cam.

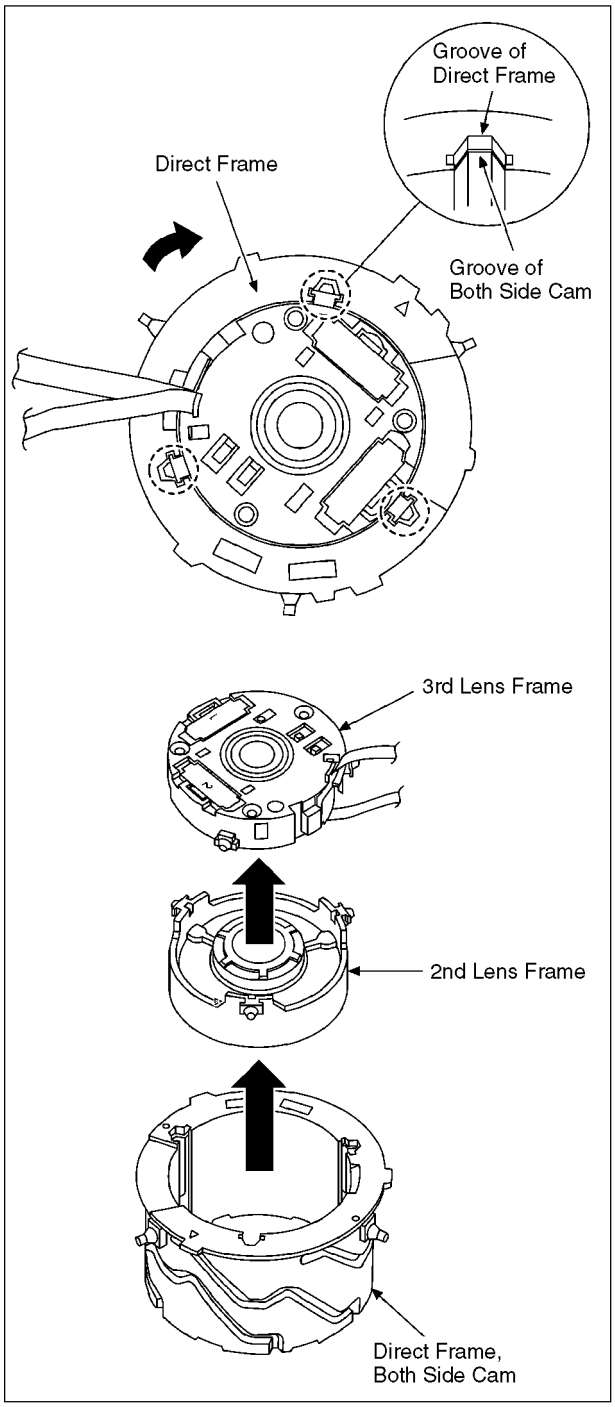

8.4.6. Removal of the Direct Frame

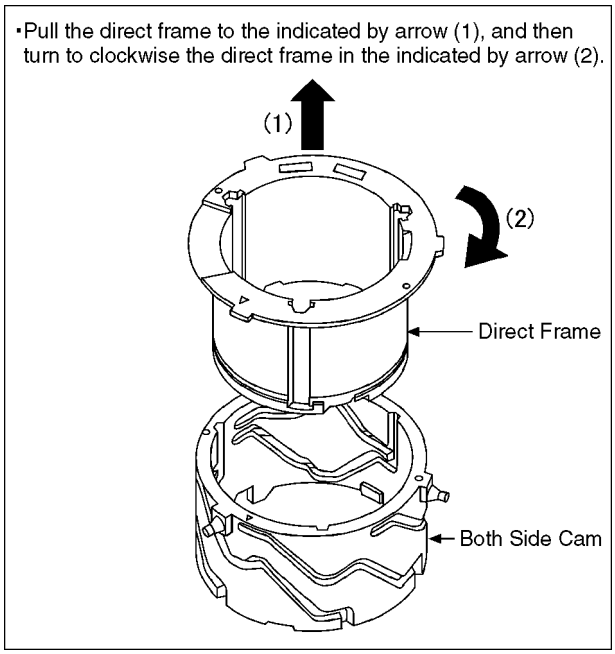

8.5. Assembly Procedure for Lens

8.5.1. Phase alignment of the Penetration Cam and Drive Frame

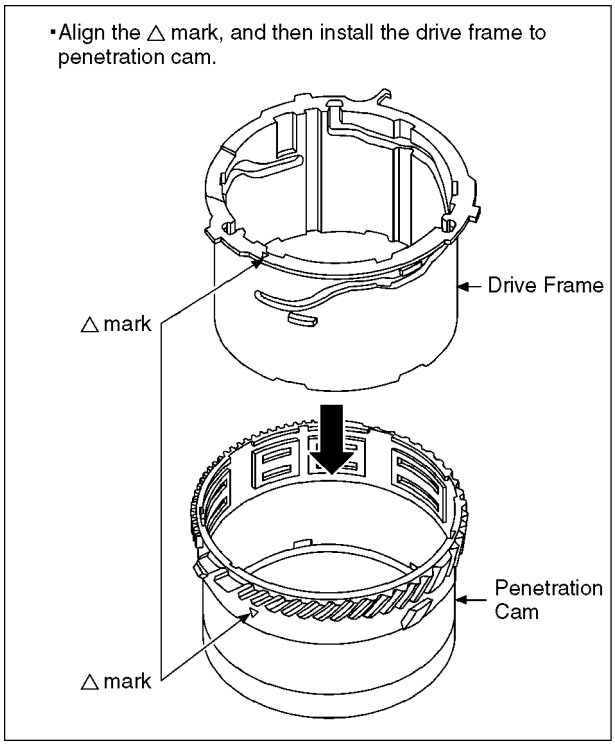

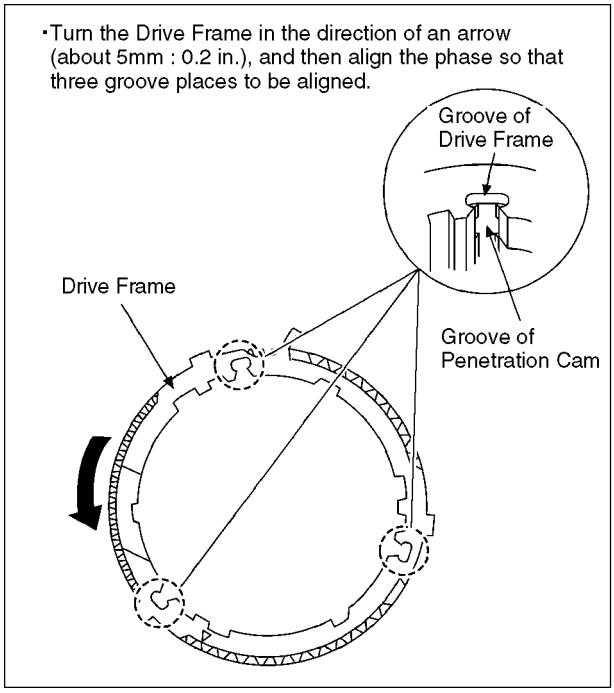

8.5.2. Phase alignment of the Direct Frame and Both Side Cam

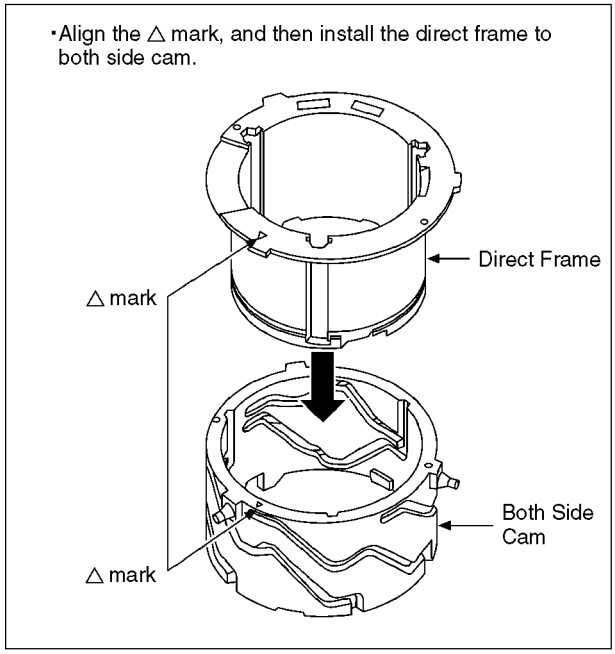

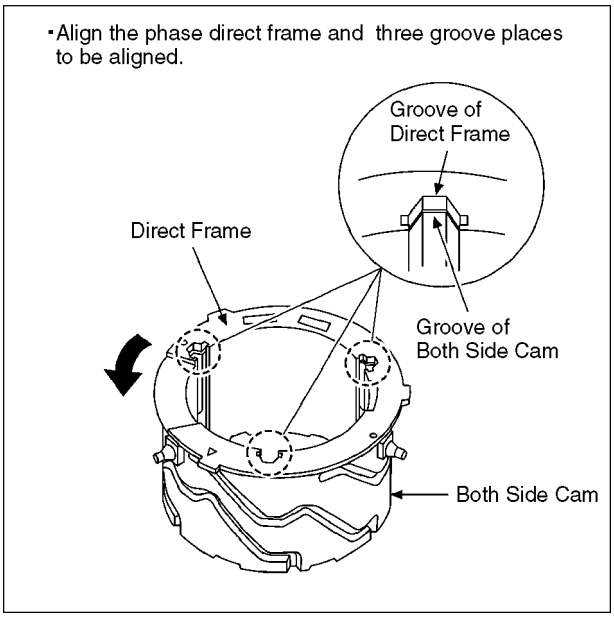

8.5.3. Assembly for the 2nd Lens Frame and 3nd Lens Frame

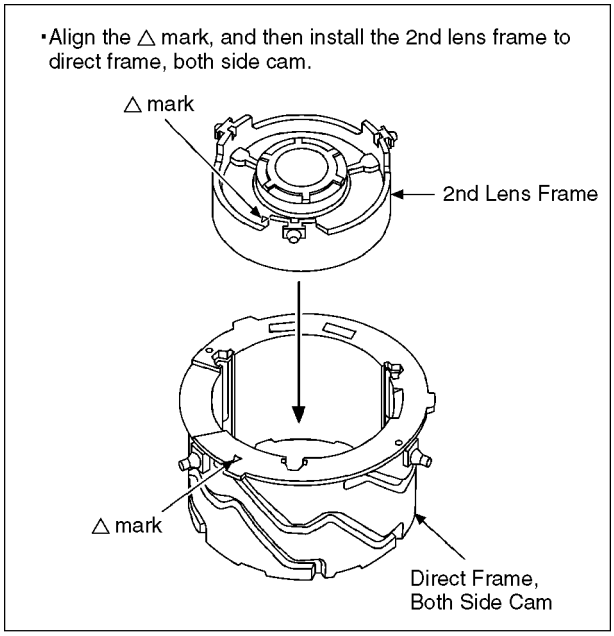

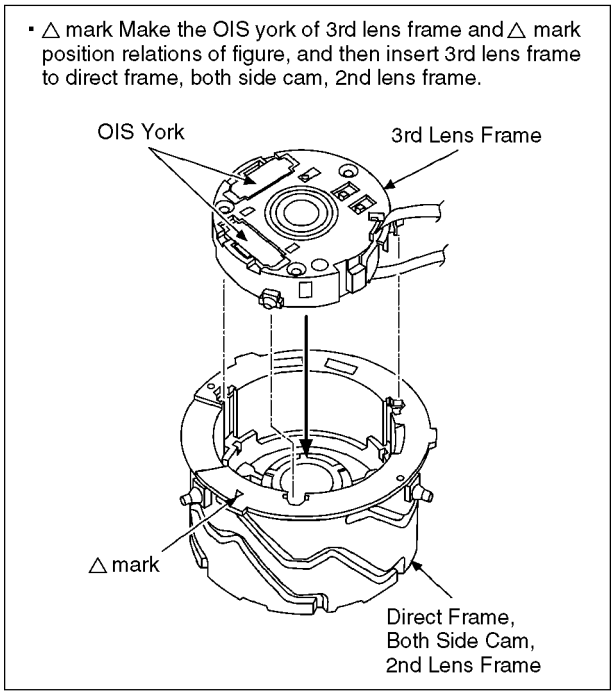

8.5.4. Assembly for the Direct Frame, Both Side Cam and 2nd Lens Frame/3nd Lens Frame

・Aim for a △mark of 3rd lens frame and cam pin of figure below, and then insert direct frame, both side cam, 2nd lens frame, 3rd lens frame to 1st lens frame.

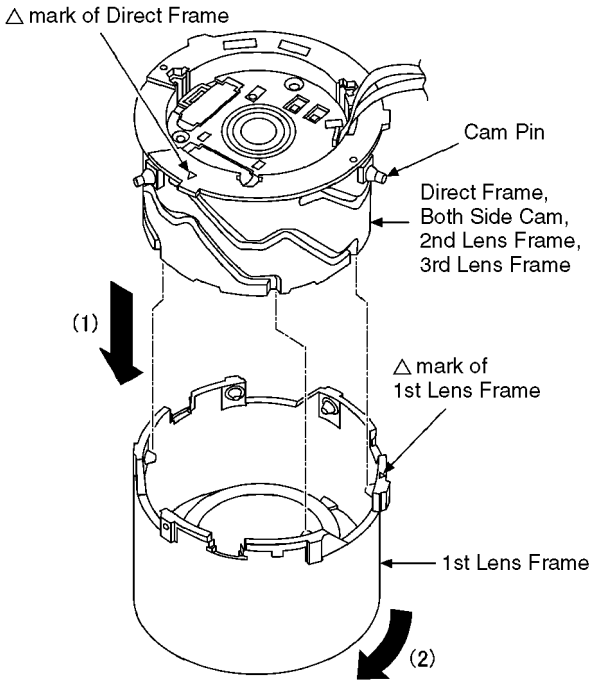

8.5.5. Assembly for the Direct Frame, Both Side Cam and 1st Lens Frame/ 2nd Lens Frame/3rd Lens Frame

1. Align the △ mark, and then install the direct frame, both side cam, 1st lens frame/ 2nd lens frame/ 3rd lens frame to drive frame, penetration cam.

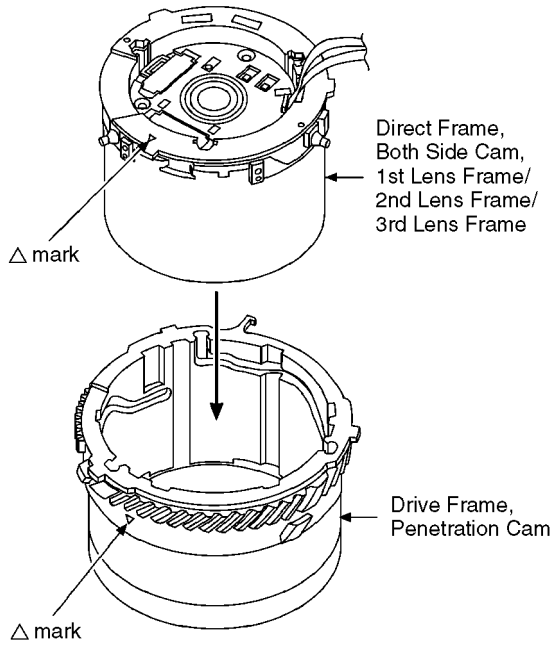

2. Turn the pin of both side cam in the direction of arrow, and then insert to groove following order.
   (1).... Projection of 1st lens unit
   (2).... Pin of both side cam
   (3).... Projection of direct frame

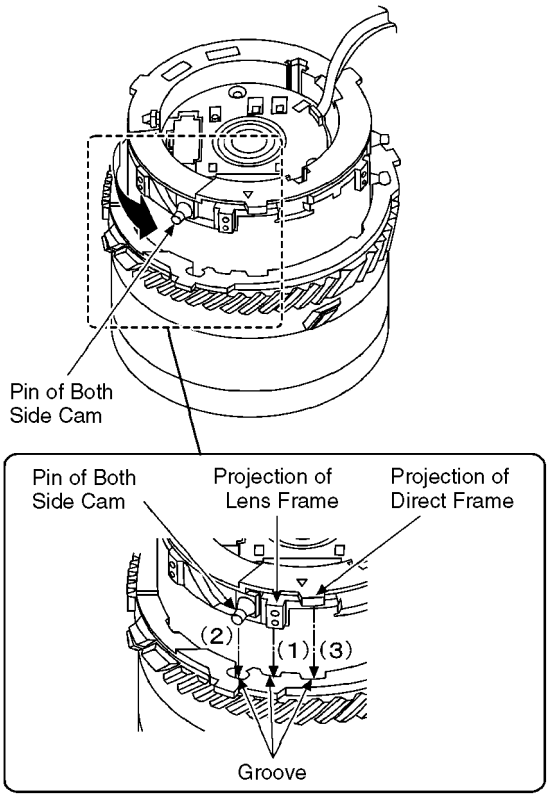

8.5.6. Assembly for the Direct Frame, Both Side Cam and 1st Lens Frame/ 2nd Lens Frame/3rd Lens Frame, Penetration Cam and Drive Frame

1. Align the △ mark, and then install the direct frame, both side cam, 1st lens frame/ 2nd lens frame/ 3rd lens frame, penetration cam, drive frame of fixed frame.

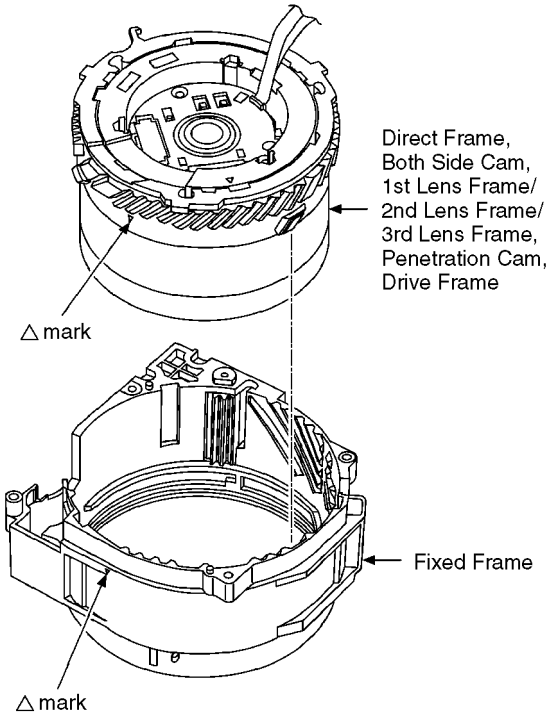

2. Turn the penetration cam in the direction of an arrow, and then put the hook to groove of fixed frame.

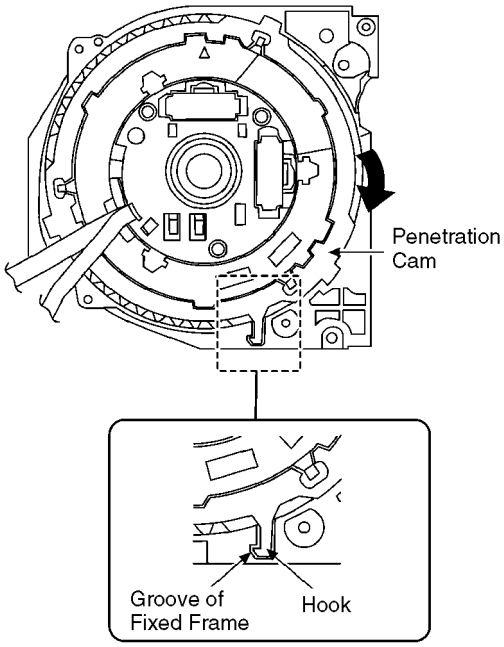

8.5.7. Assembly for the Zoom Motor Unit and Master Flange Unit

- Screw (A) × 6

NOTE: (When Installing)
- Refer to "THE APPLYMENT OF GREASE METHOD" when installing the master flange unit.
- Take care not to damage the flex.

- Insert the projection of master flange unit to hole of flex, and then insert to flex inserting part.

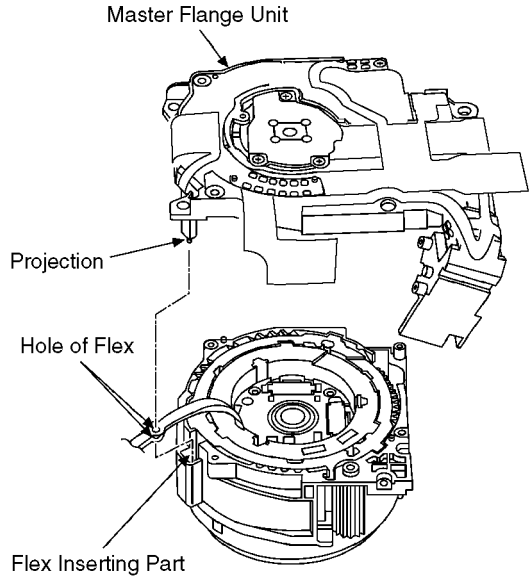

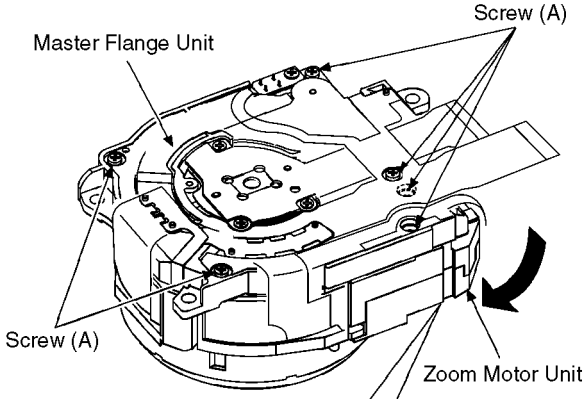

- Align the lib of fixed frame unit and hole of zoom motor unit, and then install them.

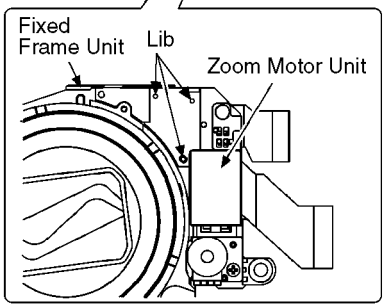

Screw (A)

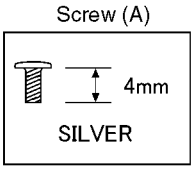

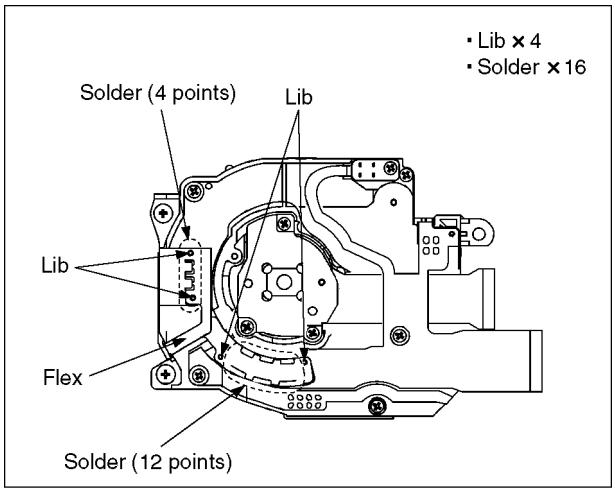

8.6. Removal of the CCD Unit

To prevent the CCD unit from catching the dust and dirt, do not remove the CCD unit except for replacing.

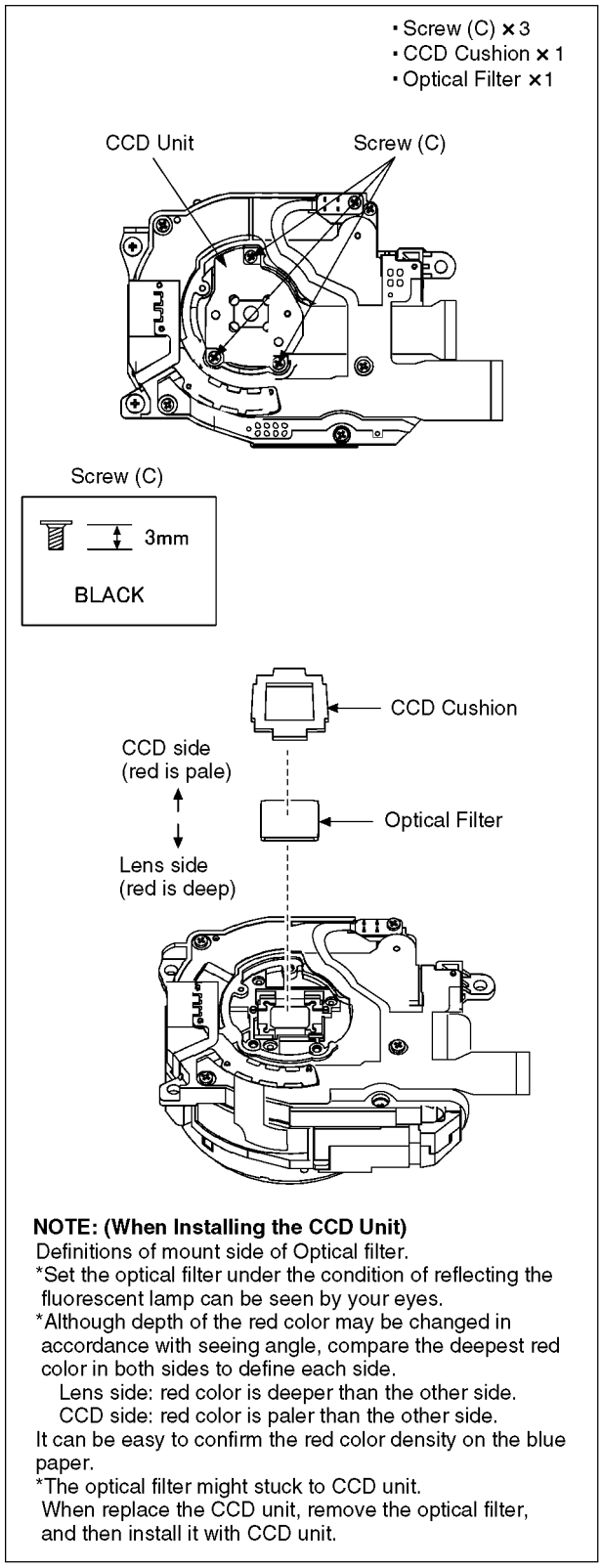

NOTE: (When Installing the CCD Unit)
Definitions of mount side of Optical filter.
*Set the optical filter under the condition of reflecting the fluorescent lamp can be seen by your eyes.
*Although depth of the red color may be changed in accordance with seeing angle, compare the deepest red color in both sides to define each side.
Lens side: red color is deeper than the other side.
CCD side: red color is paler than the other side.
It can be easy to confirm the red color density on the blue paper.
*The optical filter might stuck to CCD unit.
When replace the CCD unit, remove the optical filter, and then install it with CCD unit.

8.7. Removal of the Zoom Motor Unit

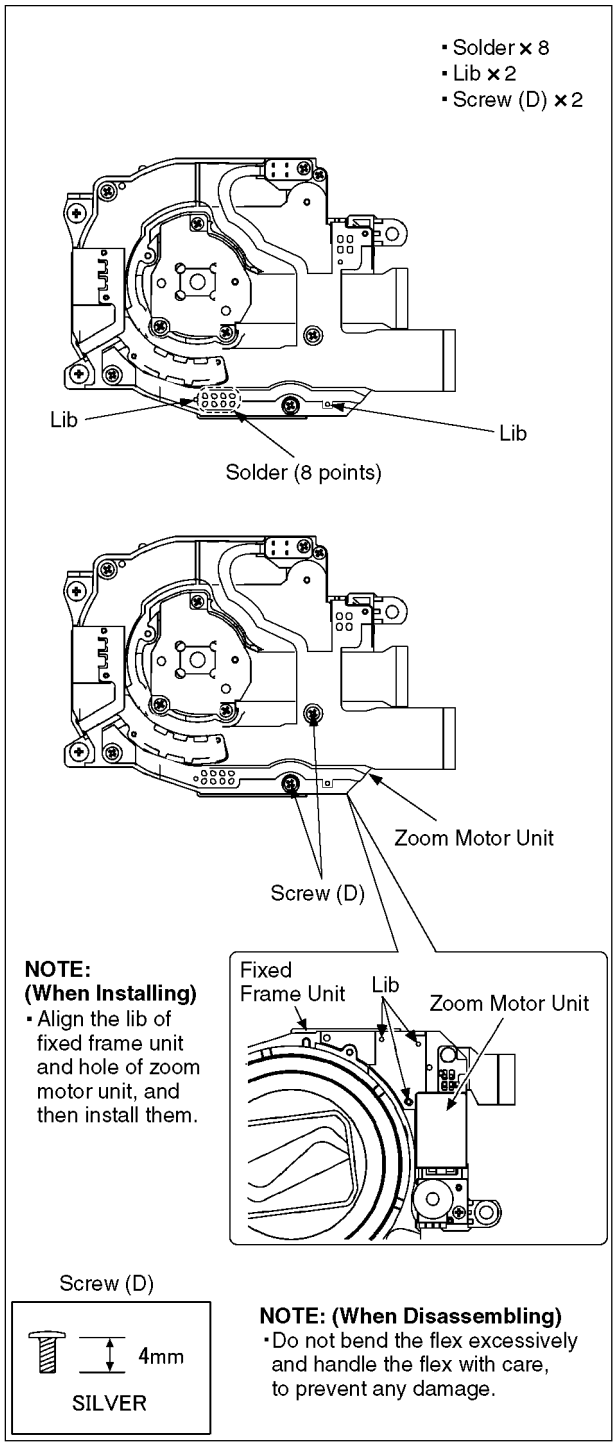

8.8. Removal of the Focus Motor Unit

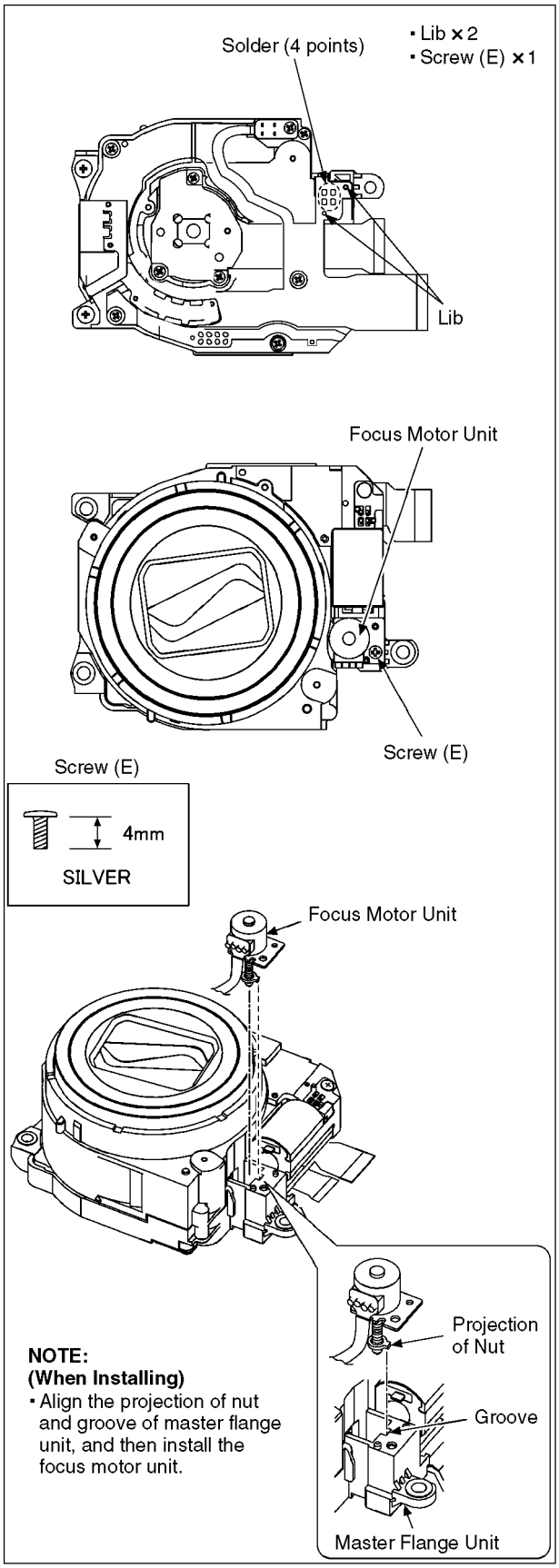

8.9. The Applyment of Grease Method

The grease apply point of lens unit are as follows.
Apply grease additionally in the specified position if necessary.
When the grease is applied, use a toothpick and apply thinly.

- Focus motor nut moving part
  - Grease: RFKZ0472
  - Amount of apply: 3 - 5 mg
- 4th lens frame positioning pole, guide pole
  - Grease: RFKZ0472
  - Amount of apply: 0.15 - 0.35 mg

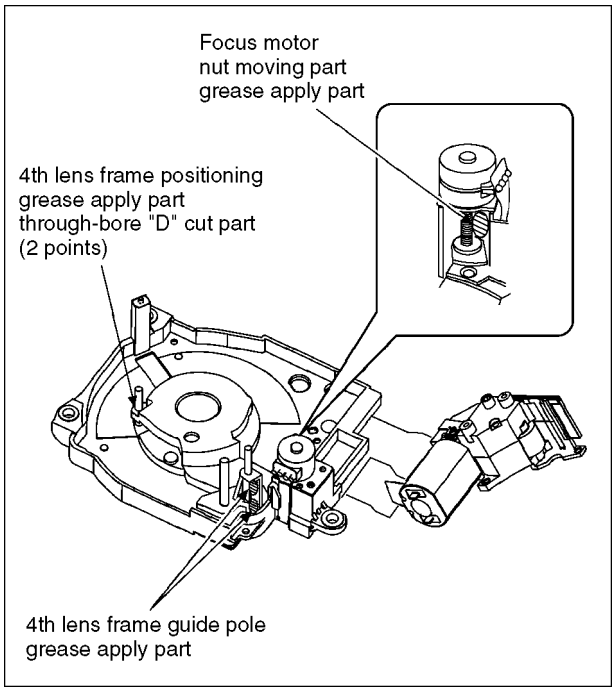

9 Measurements and Adjustments

9.1. Matrix Chart for Replaced Part and Necessary Adjustment

The relation between Replaced part and Necessary Adjustment is shown in the following table.
When concerned part is replaced, be sure to achieve the necessary adjustment(s).
As for Adjustment condition/procedure, consult the “Adjustment Manual” which is available in Adjustment software.
The Adjustment software is available at “TSN Website”, therefore, access to “TSN Website” at “Support Information from NWBG/VDBG-PAVC”.

NOTE:
After adjustments have been terminated, make sure to achieve “INITIAL SETTINGS”.

Adjustment Item		Replaced Part				
		Main P.C.B.	VENUS (IC6001)	Flash-ROM (IC6002)	Lens Part (Excluding CCD)	CCD Unit
Camera Section	OIS hall element adjustment (OIS)	O	O	O	O	-
	Back focus adjustment (BF)	O	O	O	O	O*1
	Shutter adjustment (SHT)	O	O	O	O	O
	ISO sensitivity adjustment (ISO)	O	O	O	O	O
	AWB adjustment High brightness coloration inspection (WBL)	O	O	O	O	O
	CCD white scratch compensation (WKI)	O	O	O	-	O*1
	CCD black scratch compensation (BKI)	O	O	O	-	O*1

*1 This adjustment is necessary, not only replacing CCD unit but also removing it from the lens unit.

NOTE:
*There is no LCD adjustment in this model.

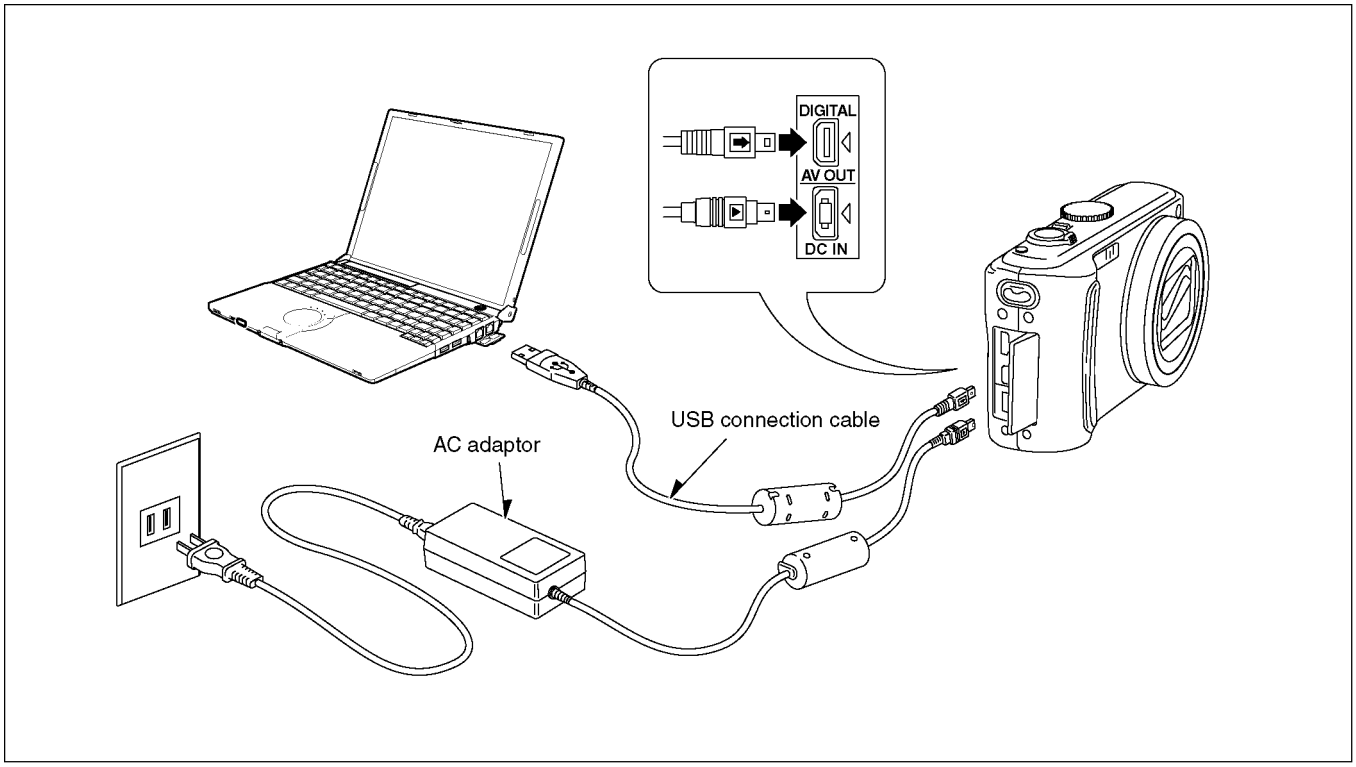

10 Maintenance

10.1. Cleaning Lens, Viewfinder and LCD Panel

Do not touch the surface of lens, Viewfinder and LCD Panel with your hand.
When cleaning the lens, use air-Blower to blow off the dust.
When cleaning the LCD Panel, dampen the lens cleaning paper with lens cleaner, and the gently wipe the their surface.

Note:

The Lens Cleaning KIT ; VFK1900BK(Only supplied as 10 set/Box) is available as Service Aid.

DSC0803021CE

Service Manual

Diagrams and Replacement Parts List

Digital Camera

Model No.

DMC-TZ5P	DMC-TZ5E
DMC-TZ5PC	DMC-TZ5SG
DMC-TZ5PL	DMC-TZ15GC
DMC-TZ5PR	DMC-TZ15GD
DMC-TZ5EB	DMC-TZ15GK
DMC-TZ5EE	DMC-TZ15GN
DMC-TZ5EF	DMC-TZ15GT
DMC-TZ5EG	DMC-TZ15GJ

Vol. 1
Colour
(S).....Silver Type (except PR/GD)
(K).....Black Type
(A).....Blue Type (only P/PC/PL/PR/EE/EG/E)
(TA).....Dark Brown Type (only EF/EG/E)
(T).....Brown Type (only SG/GC/GK/GJ)

Table of contents

S1. About Indication of The Schematic Diagram

S1.1. Important Safety Notice

COMPONENTS IDENTIFIED WITH THE MARK ⚠ HAVE THE SPECIAL CHARACTERISTICS FOR SAFETY. WHEN REPLACING ANY OF THESE COMPONENTS USE ONLY THE SAME TYPE.

1.Although reference number of the parts is indicated on the P.C.B. drawing and/or schematic diagrams, it is NOT mounted on the P.C.B. when it is displayed with "$" mark.

2.It is only the "Test Round" and no terminal (Pin) is available on the P.C.B. when the TP (Test Point) indicated as "●" mark.

3.The voltage being indicated on the schematic diagram is measured in "Standard-Playback" mode when there is no specify mode is mentioned.

4.Although the voltage and waveform available on here is measured with standard frame, it may be differ from actual measurement due to modification of circuit and so on.

5.The voltage being indicated here may be include observational-error (deviation) due to internal-resistance and/or reactance of equipment. Therefore, handle the value indicated on here as reference.

6.Use the parts number indicated on the Replacement Parts List .

7.Indication on Schematic diagrams:

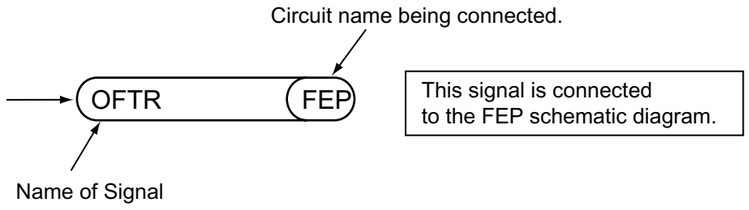

S2. Voltage Chart

Note) Indicated voltage values are the standard values for the unit measured by the DC electronic circuit tester (high-impedance) with the chassis taken as standard.
Therefore, there may exist some errors in the voltage values, depending on the internal impedance of the DC circuit tester.

S2.1. Flash P.C.B.

REF No.	PIN No.	POWER ON
IC8001	1	-
IC8001	2	0
IC8001	3	4.9
IC8001	4	0
IC8001	5	0
Q8009	1	5.1
Q8009	2	5.1
Q8009	3	0
Q8009	4	0
Q8009	5	5.1
Q8009	6	5.1

S3. Block Diagram

S3.1. Overall Block Diagram

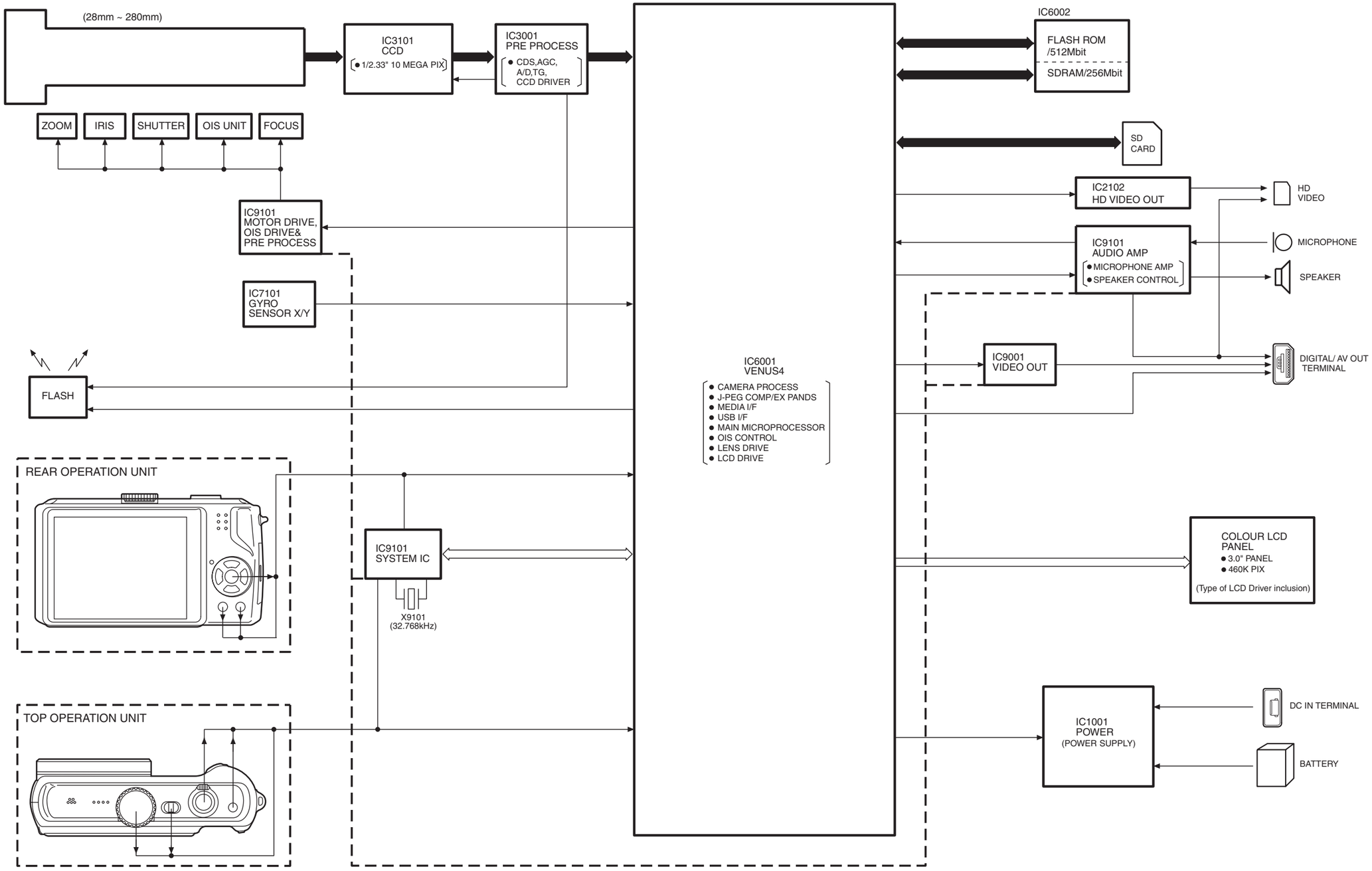

DMC-TZ5/TZ15 OVERALL BLOCK DIAGRAM

S4. Schematic Diagram

S4.1. Interconnection Diagram

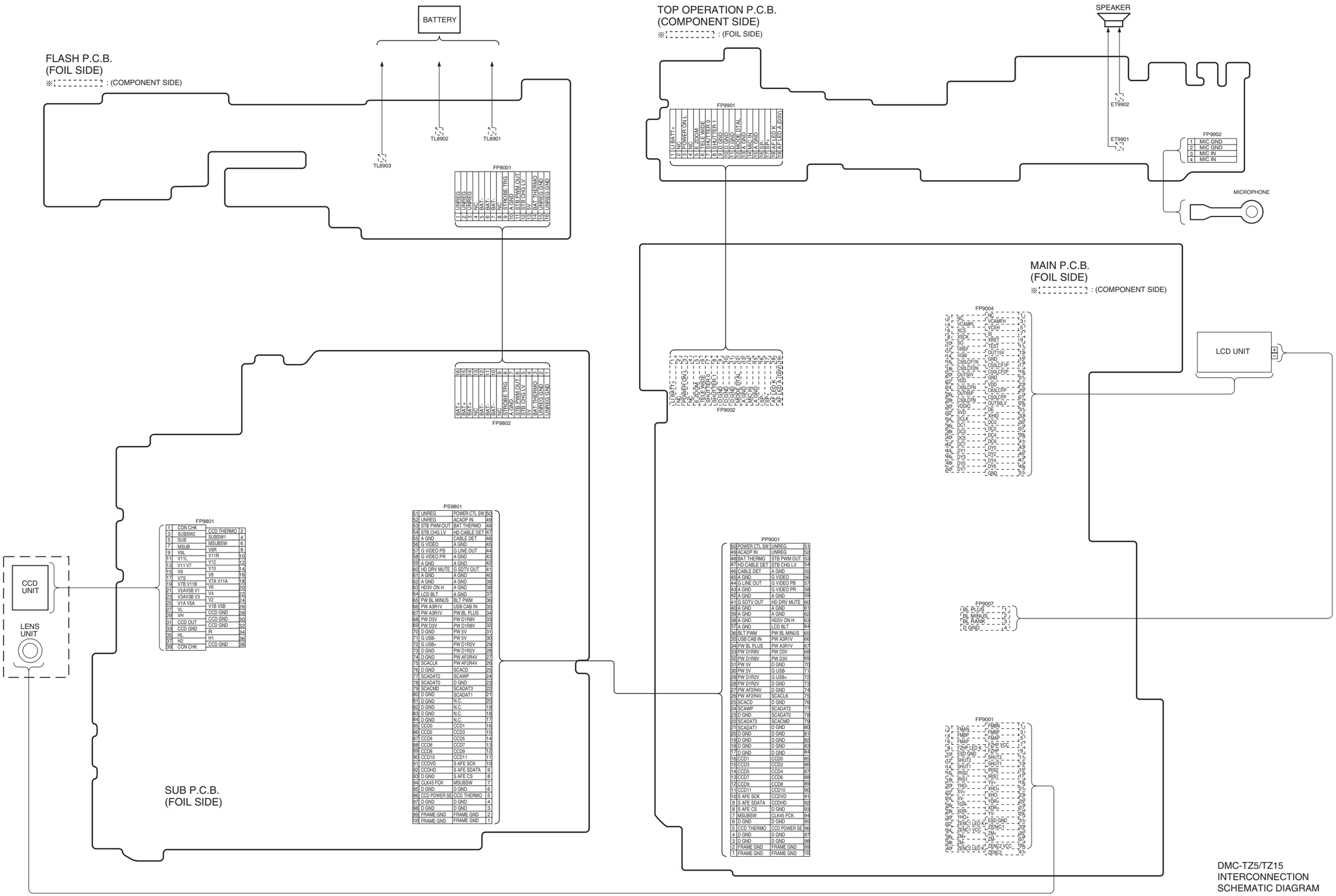

DMC-TZ5/TZ15
INTERCONNECTION
SCHEMATIC DIAGRAM

S4.2. Flash Schematic Diagram

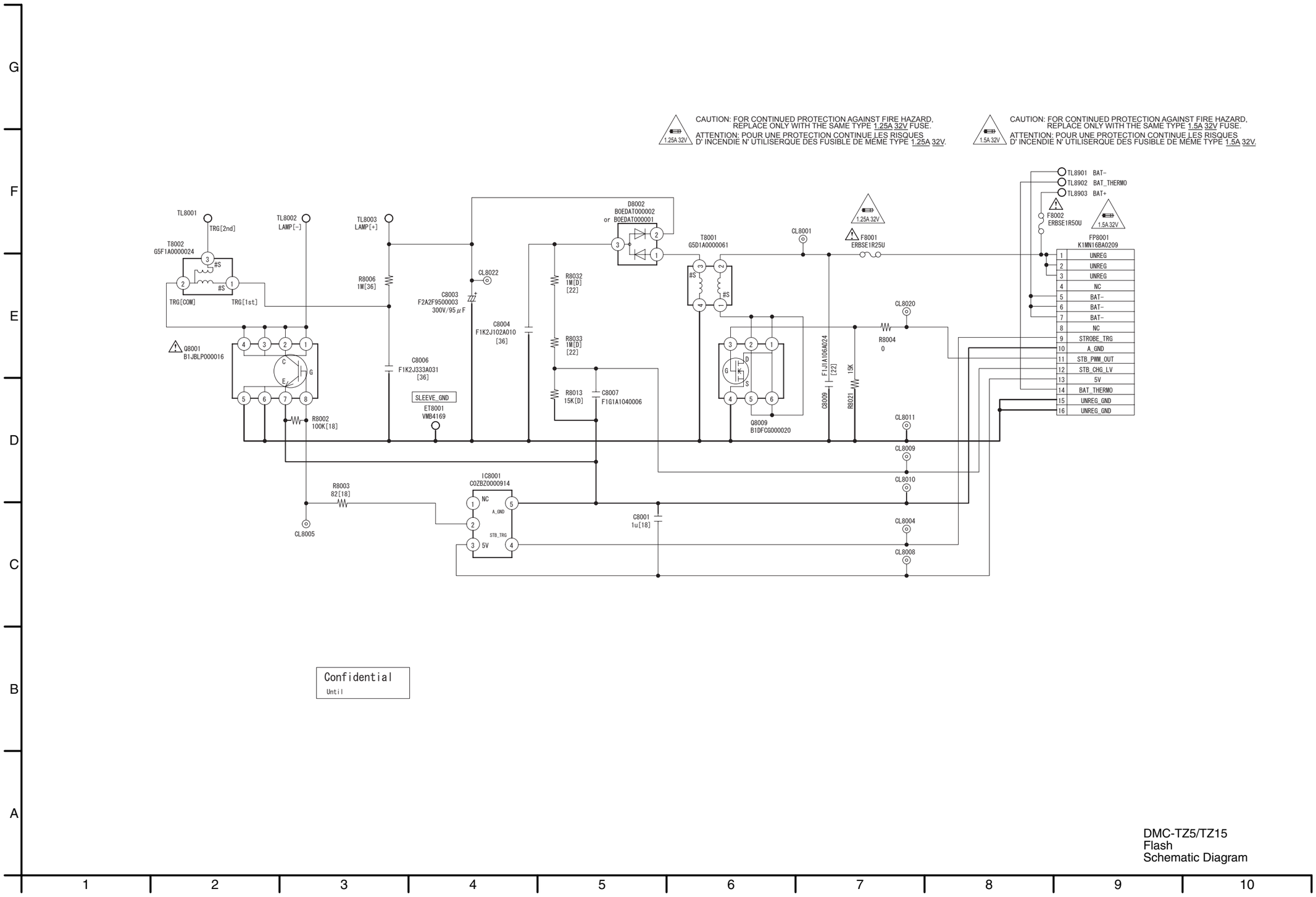

DMC-TZ5/TZ15
Flash
Schematic Diagram

S4.3. Top Operation Schematic Diagram

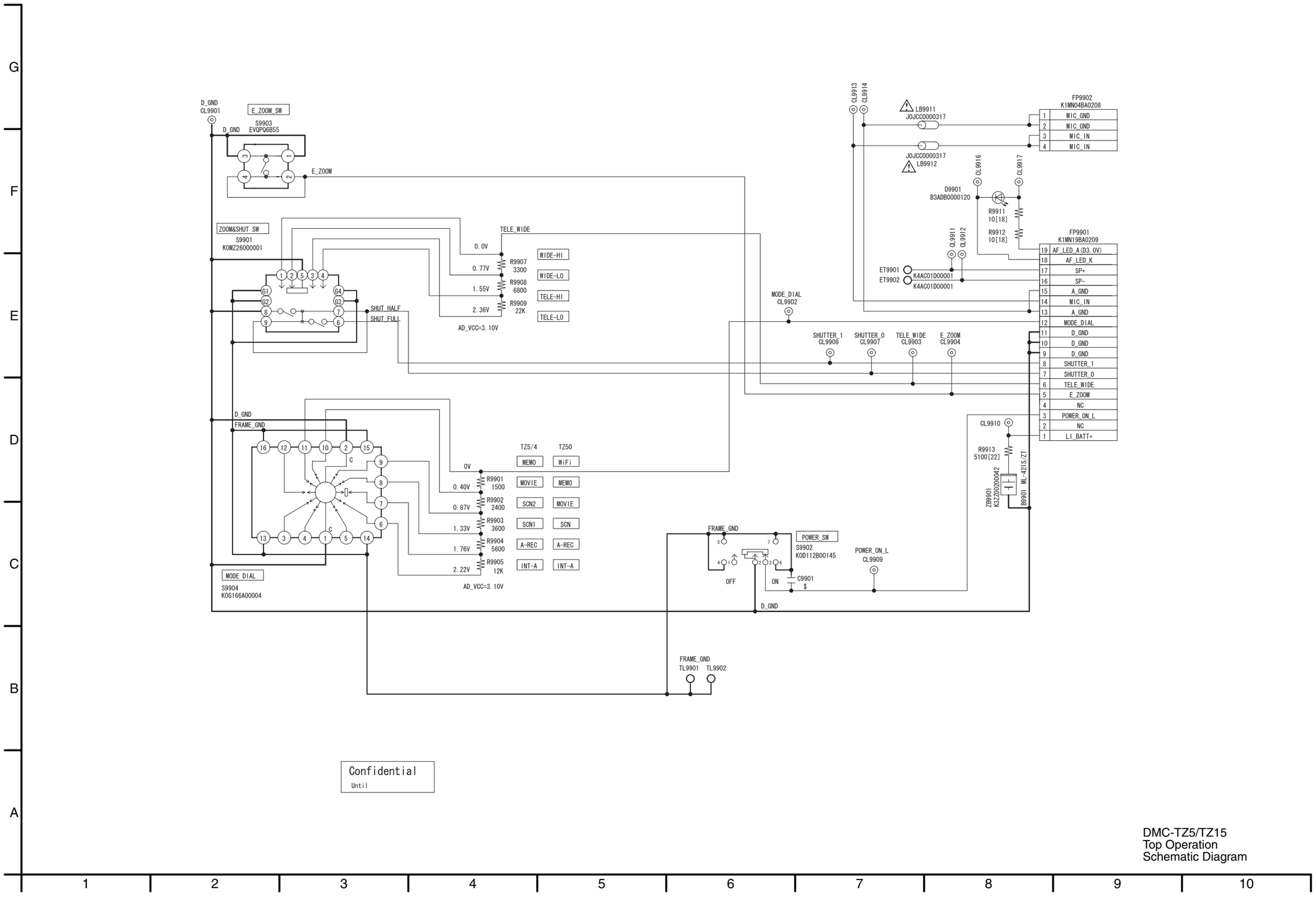

DMC-TZ5/TZ15
Top Operation
Schematic Diagram

S4.4. CCD Flex Schematic Diagram

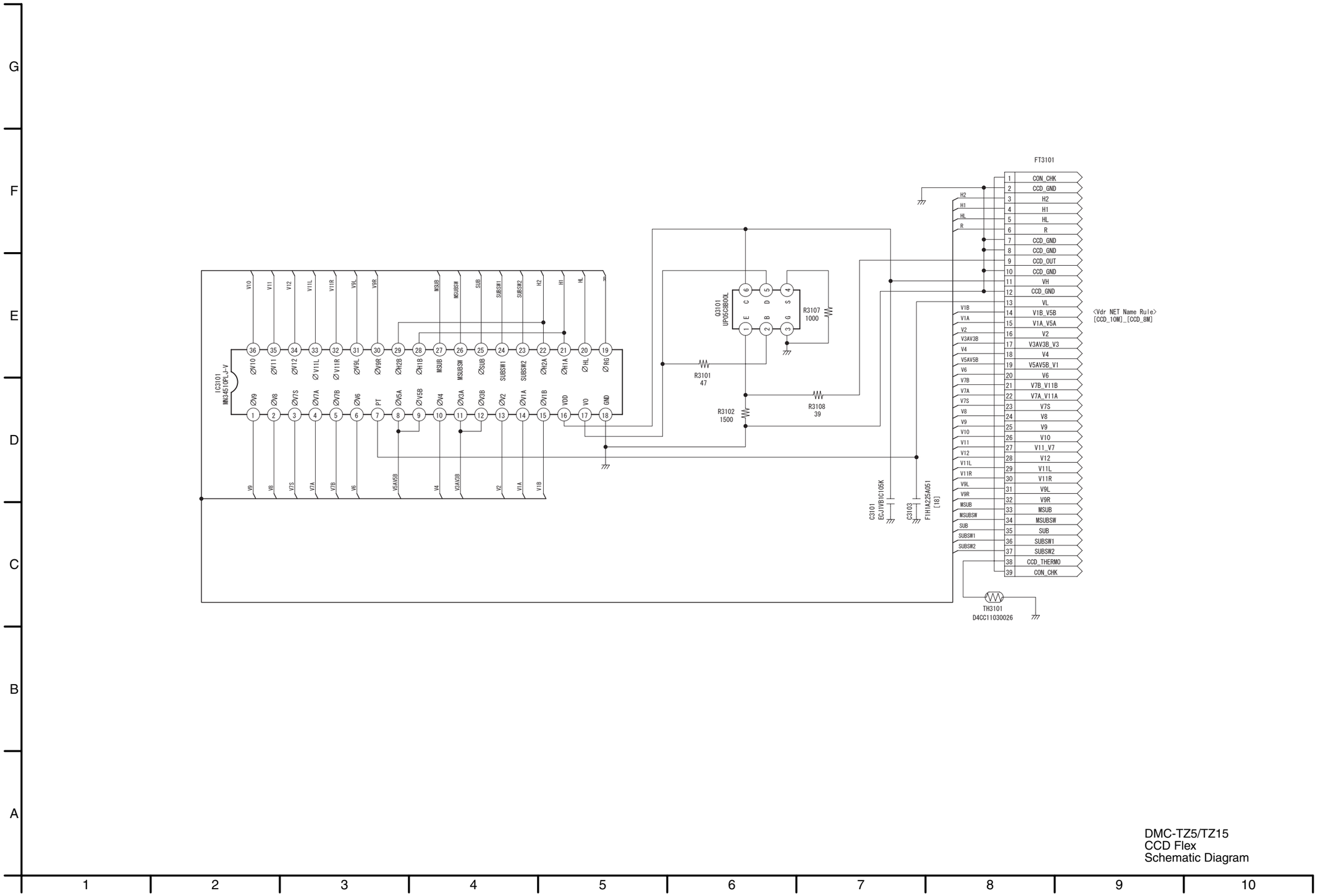

DMC-TZ5/TZ15
CCD Flex
Schematic Diagram

S4.5. Lens Flex Schematic Diagram

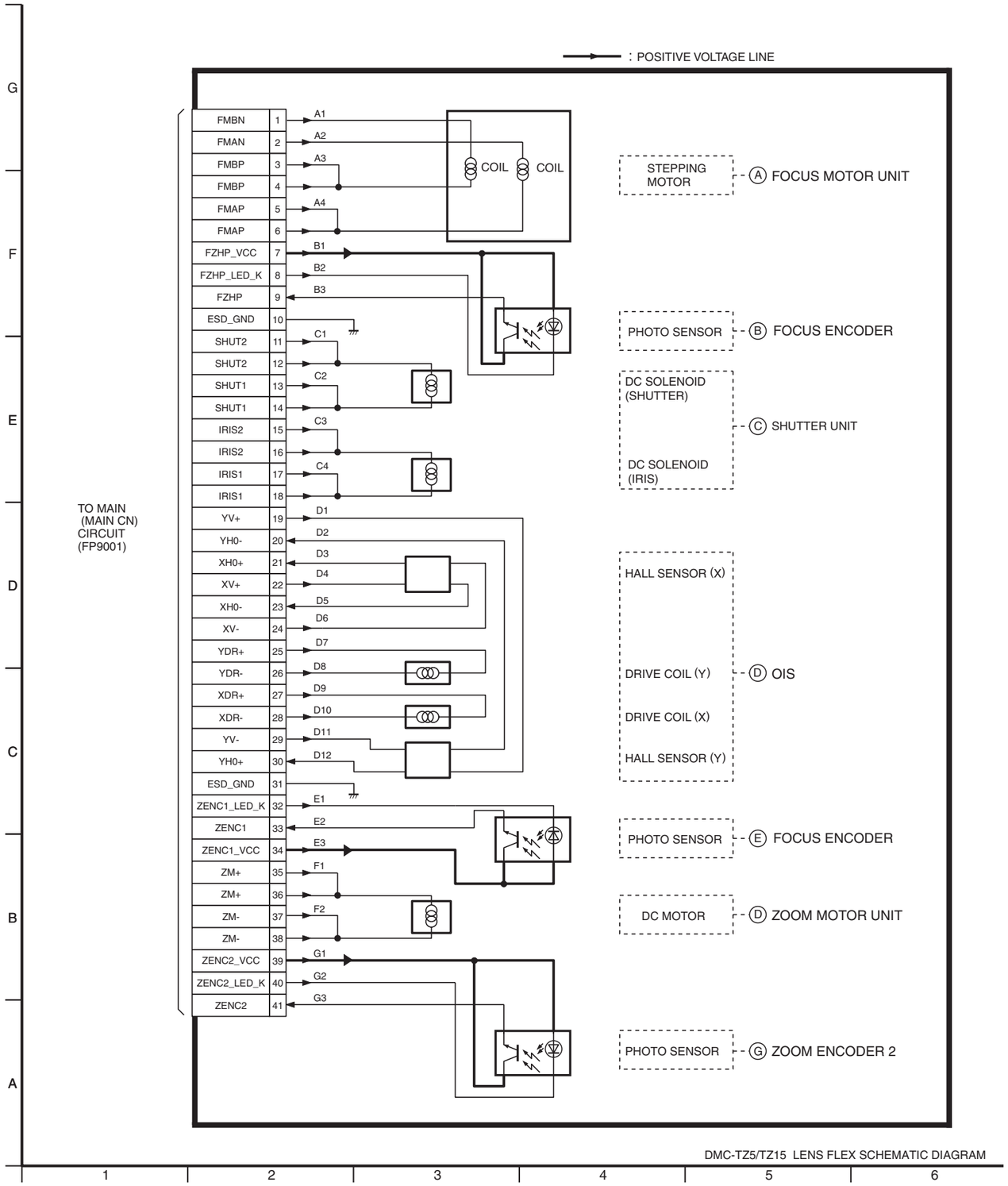

DMC-TZ5/TZ15 LENS FLEX SCHEMATIC DIAGRAM

S5. Print Circuit Board

S5.1. Flash P.C.B.

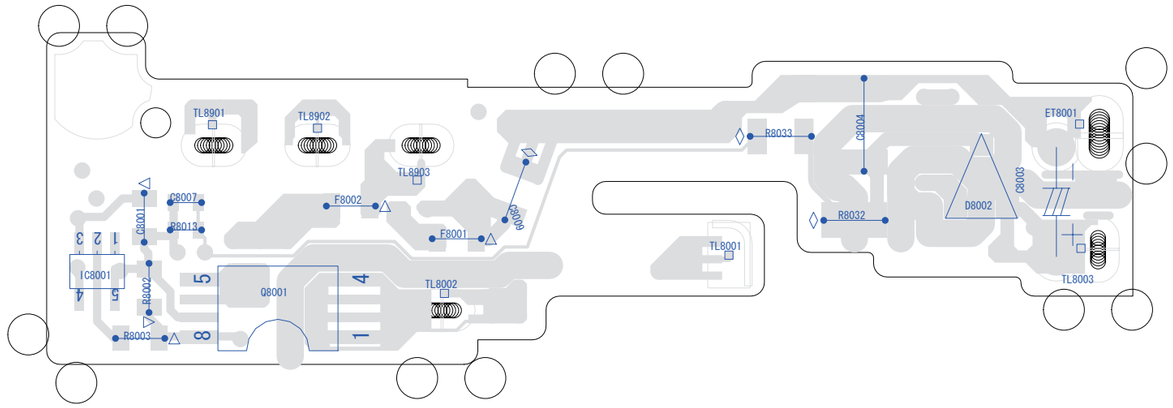

(Component Side)

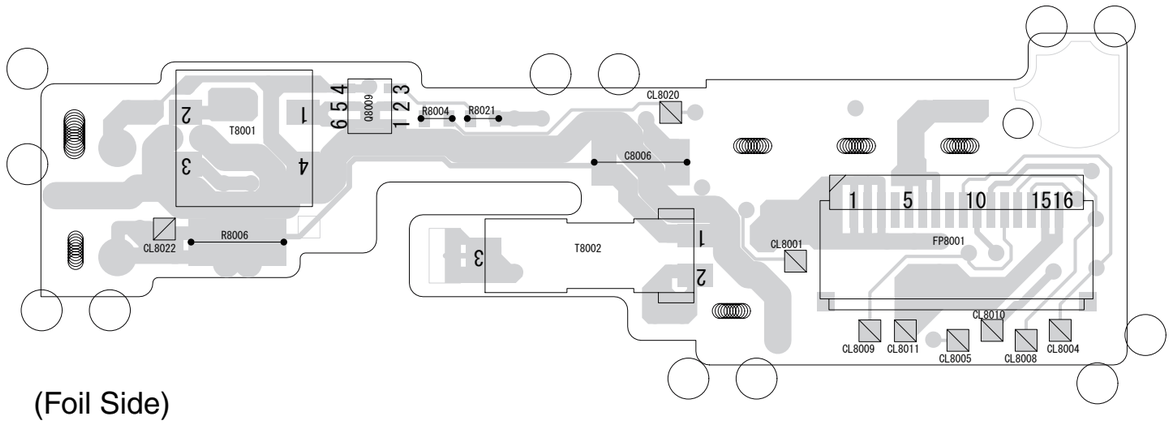

(Foil Side)

DMC-TZ5/TZ15
Flash P.C.B.

S5.2. Top Operation P.C.B.

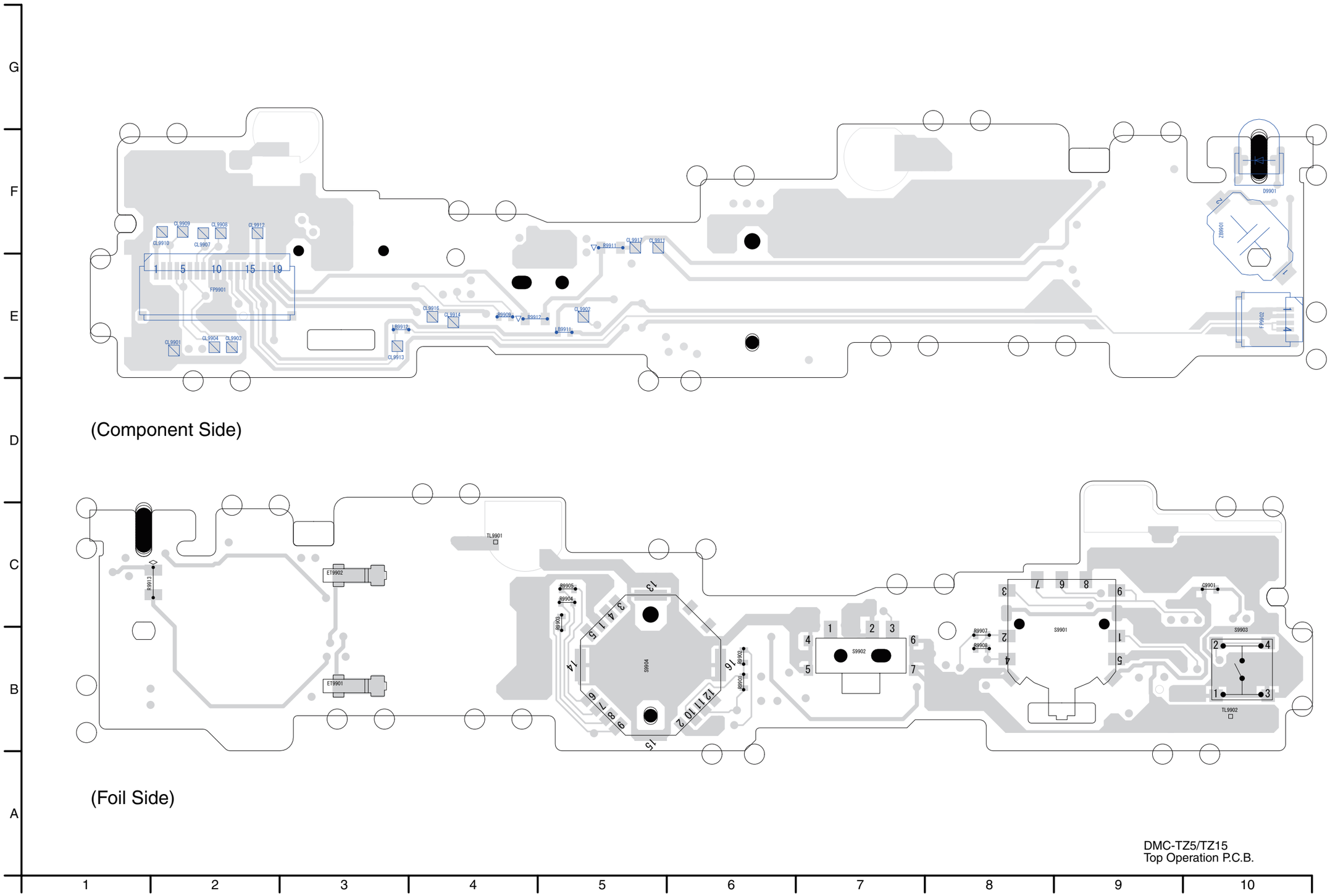

S5.3. CCD Flex P.C.B.

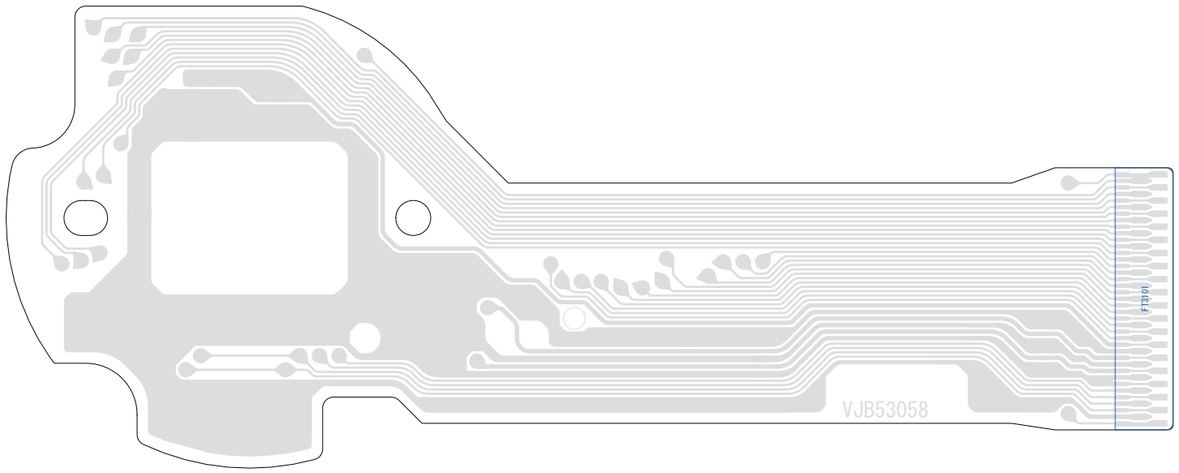

(Component Side)

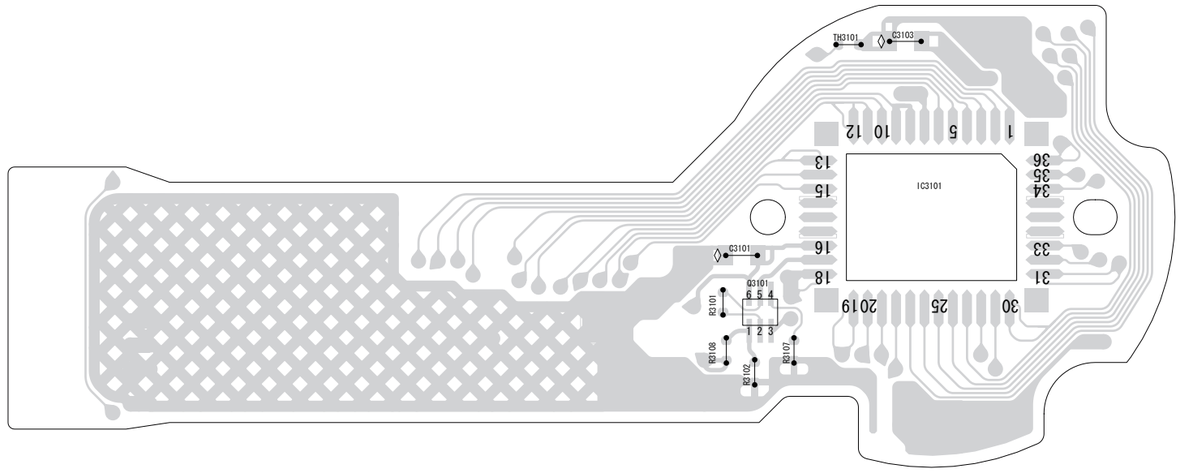

(Foil Side)

DMC-TZ5/TZ15
CCD Flex P.C.B.

S5.4. Lens Flex P.C.B.

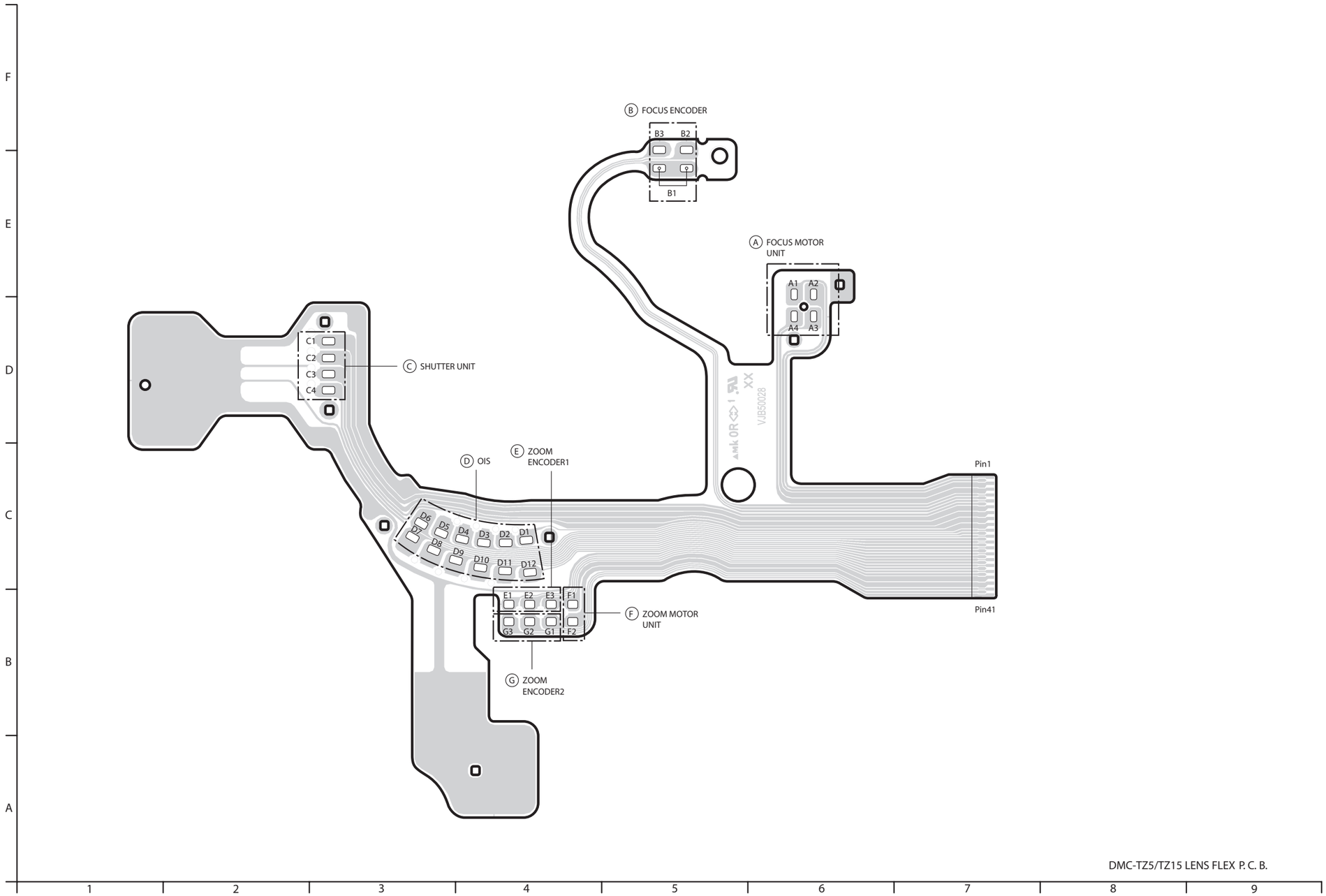

S6. Replacement Parts List

Note:
1.* Be sure to make your orders of replacement parts according to this list.
2. IMPORTANT SAFETY NOTICE
   Components identified with the mark ⚠ have the special characteristics for safety.
   When replacing any of these components, use only the same type.
3. Unless otherwise specified,
   All resistors are in OHMS, K=1,000 OHMS. All capacitors are in MICRO-FARADS (uf), P=uuF.
4. The marking (RTL) indicates the retention time is limited for this item. After the discontinuation of this assembly in production, it will no longer be available.
5. Supply of CD-ROM, in accordance with license protection, is allowable as replacement parts only for customers who accidentally damaged or lost their own.

E.S.D. standards for Electrostatically Sensitive Devices, refer to PREVENTION OF ELECTROSTATIC DISCHARGE (ESD) TO ELECTROSTATICALLY SENSITIVE (ES) DEVICES section.

Definition of Parts supplier:

1. **Parts marked with [MBI] in the remarks column are supplied from Matsushita Battery Industrial Co., Ltd.**

Ref.No.	Part No.	Part Name & Description	Pcs	Remarks
##	VEP51020A	SUB P.C.B	1	(RTL) E.S.D
##	VEP56063A	MAIN P.C.B	1	(RTL) E.S.D
##	VEP59052A	TOP OPERATION P.C.B	1	(RTL) E.S.D
##	VEP58055A	FLASH P.C.B	1	(RTL) E.S.D
##	VEK0L97	CCD UNIT	1	E.S.D.
##	VEP59052A	TOP OPERATION P.C.B		(RTL) E.S.D
D9901	B3ADB0000120	LED	1	E.S.D.
ET9901	K4AC01D00001	EARTH SPRING	1	
ET9902	K4AC01D00001	EARTH SPRING	1	
FP9901	K1MN19BA0209	CONNECTOR 19P	1	
FP9902	K1MN04BA0208	CONNECTOR 4P	1	
⚠ LB9911	J0JCC0000317	FILTER	1	
⚠ LB9912	J0JCC0000317	FILTER	1	
R9901	ERJ2GEJ152	M.RESISTOR CH 1/16W 1.5K	1	
R9902	ERJ2GEJ242	M.RESISTOR CH 1/16W 2.4K	1	
R9903	ERJ2GEJ362	M.RESISTOR CH 1/16W 3.6K	1	
R9904	ERJ2GEJ562	M.RESISTOR CH 1/16W 5.6K	1	
R9905	ERJ2GEJ123	M.RESISTOR CH 1/16W 12K	1	
R9907	ERJ2GEJ332	M.RESISTOR CH 1/16W 3.3K	1	
R9908	ERJ2RHD682X	M.RESISTOR CH 1/16W 6.8K	1	
R9909	ERJ2GEJ223	M.RESISTOR CH 1/16W 22K	1	
R9911	ERJ3GEYJ100	M.RESISTOR CH 1/10W 10	1	
R9912	ERJ3GEYJ100	M.RESISTOR CH 1/10W 10	1	
R9913	ERJ6GEYJ512	M.RESISTOR CH 1/10W 5.1K	1	
S9901	K0MZ26000001	SWITCH	1	
S9902	K0D112B00145	SWITCH	1	
S9903	EVQPQ6B55	SWITCH	1	
S9904	K0G166A00004	ROTARY SWITCH	1	
ZB9901	K3ZZ00200042	BATTERY HOLDER	1	
##	VEP58055A	FLASH P.C.B		(RTL) E.S.D
C8001	ECJ1VB0J105K	C.CAPACITOR CH 6.3V 1U	1	
C8004	F1K2J102A010	C.CAPACITOR 630V 1000P	1	
C8006	F1K2J333A031	C.CAPACITOR 630V 0.033U	1	
C8007	F1G1A1040006	C.CAPACITOR CH 10V 0.1U	1	
C8009	F1J1A106A024	C.CAPACITOR CH 10V 10U	1	
D8002	B0EDAT000002	DIODE	1	E.S.D.
⚠ F8001	ERBSE1R25U	FUSE 32V 1.25A	1	
⚠ F8002	ERBSE1R50U	FUSE 32V 1.5A	1	
FP8001	K1MN16BA0209	CONNECTOR 16P	1	
IC8001	C0ZBZ0000914	IC	1	E.S.D.
⚠ Q8001	B1JBLP000016	TRANSISTOR	1	E.S.D.
Q8009	B1DFCG000020	TRANSISTOR	1	E.S.D.
R8002	ERJ3GEYJ104	M.RESISTOR CH 1/10W 100K	1	
R8003	ERJ3GEYJ820	M.RESISTOR CH 1/10W 82	1	
R8004	D0YAR0000007	M.RESISTOR CH 1/16W 0	1	
R8006	ERJ8GEYJ105V	M.RESISTOR CH 1/8W 1M	1	
R8013	ERJ2RHD153X	M.RESISTOR CH 1/16W 15K	1	
R8021	ERJ2GEJ153	M.RESISTOR CH 1/16W 15K	1	
R8032	ERJ6RED105	M.RESISTOR CH 1/16W 1M	1	
R8033	ERJ6RED105	M.RESISTOR CH 1/16W 1M	1	
T8001	G5D1A0000061	TRANSFORMER	1	

Ref.No.	Part No.	Part Name & Description	Pcs	Remarks
T8002	G5F1A0000024	TRANSFORMER	1	
##	VEK0L97	CCD UNIT		E.S.D.
C3101	ECJ1VB1C105K	C.CAPACITOR CH 16V 1U	1	
C3103	F1H1A225A051	C.CAPACITOR CH 10V 2.2U	1	
Q3101	UP05C8B00L	TRANSISTOR	1	E.S.D.
R3101	ERJ2GEJ470	M.RESISTOR CH 1/16W 47	1	
R3102	ERJ2GEJ182	M.RESISTOR CH 1/16W 1.8K	1	
R3107	ERJ2GEJ821	M.RESISTOR CH 1/16W 820	1	
R3108	ERJ2RKD330	M.RESISTOR CH 1/16W 33	1	
TH3101	D4CC11030026	THERMISTER	1	

Ref.No.	Part No.	Part Name & Description	Pcs	Remarks
1	VEP51020A	SUB P.C.B	1	(RTL) E.S.D
2	VEP56063A	MAIN P.C.B	1	(RTL) E.S.D
3	L0AA01A00032	SPEAKER	1	
⚠ 4	ML421S/ZT	BUTTON BATTERY	1	(MBI) (B9901)
5	VMB4169	EARTH SPRING	1	
7	VGU0B04	OIS BUTTON	1	
8	VEP59052A	TOP OPERATION P.C.B	1	(RTL) E.S.D
9	VML3972	SLIDE KNOB	1	
11	VYK2S33	TOP ORNAMENT U	1	(TZ5)
11	VYK2S34	TOP ORNAMENT U	1	(TZ15)
13	VEK0L84	FLASH U	1	
14	VGQ9761	CONDENSER COVER	1	
15	VMB4024	BATTERY SPRING	1	
16	VWJ2036	FPC	1	
17	VEP58055A	FLASH P.C.B	1	(RTL) E.S.D
18	VGQ9765	SLIDE GUIDE	1	
19	F2A2F9500003	E.CAPACITOR CH 300V 95UF	1	(C8003)
20	VGL1274	AF PANEL LIGHT	1	
23	VYQ4283	FRAME ASSY	1	(-S)
23	VYQ4287	FRAME ASSY	1	(-K)
23	VYQ4288	FRAME ASSY	1	(-A)
23	VYQ4289	FRAME ASSY	1	(-T)
23	VYQ4290	FRAME ASSY	1	(-TA)
23-1	VGK3414	STRAP HOLDER	1	
23-2	VKF4299	JACK DOOR	1	(-S)
23-2	VKF4300	JACK DOOR	1	(-K)
23-2	VKF4301	JACK DOOR	1	(-A)
23-2	VKF4302	JACK DOOR	1	(-T)
23-2	VKF4334	JACK DOOR	1	(-TA)
23-3	VMS7822	BATTERY DOOR SHAFT	1	
23-4	VMS7893	JACK DOOR SHAFT	1	
23-5	VYF3178	BATTERY DOOR ASSY	1	(-S)
23-5	VYF3182	BATTERY DOOR ASSY	1	(-K)
23-5	VYF3183	BATTERY DOOR ASSY	1	(-A)
23-5	VYF3184	BATTERY DOOR ASSY	1	(-T)
23-5	VYF3185	BATTERY DOOR ASSY	1	(-TA)
24	VYK2N05	FRONT CASE ASSY	1	(-S)
24	VYK2N09	FRONT CASE ASSY	1	(-K)
24	VYK2N07	FRONT CASE ASSY	1	(-A)
24	VYK2N11	FRONT CASE ASSY	1	(-T)
24	VYK2N13	FRONT CASE ASSY	1	(-TA)
24-1	VGQ9758	LENS ORNAMENT	1	
25	VYK2M54	LCD ASSY	1	
26	VGU0C33	CURSOR BUTTON	1	
27	VGK3409	FRONT GRIP	1	
28	VGK3412	GRIP FIX	1	
29	VYK2R55	REAR CASE ASSY	1	(-S)
29	VYK2R56	REAR CASE ASSY	1	(-K)
29	VYK2R57	REAR CASE ASSY	1	(-A)
29	VYK2R58	REAR CASE ASSY	1	(-T)
29	VYK2R59	REAR CASE ASSY	1	(-TA)
30	VGQ9317	TRIPOD	1	
31	VGQ9760	PCB SPECER	1	
33	VGQ9162	CURSOL TAPE	1	
35	VMC2056	PCB PLATE	1	
36	VGQ9162	CURSOL TAPE	1	
37	VWJ2035	FPC	1	
38	VGL1230	REAR PANEL LIGHT	1	
40	VEK0M49	HEAT SINK SHEET U	1	
41	VGQ9909	LCD SHEET	1	

Ref.No.	Part No.	Part Name & Description	Pcs	Remarks
201	VDL2073	OPTICAL FILTER	1	
202	VEK0L97	CCD UNIT	1	
203	VMX3650-B	CCD CUSHION RUBBER	1	
204	L6DABCGD0002	ZOOM MOTOR UNIT	1	
205	B3NAA0000132	PHOTO COUPLER	1	
207	VDW1412	2ND/3RD DIRECT FRAME	1	
208	VXP2912	1ST LENS FRAME UNIT	1	
210	VXP2746	2ND LENS FRAME UNIT	1	
211	VXP2918	3RD LENS FRAME UNIT	1	
214	VXQ1576	MASTER FRANGE UNIT	1	
215	L6HA86ND0002	FOCUS MOTOR UNIT	1	
216	VXW0934	LENS UNIT	1	
217	VXP2830	FIX CAM FRAME UNIT	1	
218	VEK0L98	LENS FPC	1	
B1	VHD1693	SCREW	1	(-S)(-T)
B1	VHD1853	SCREW	1	(-K)(-A)(-TA)
B2	VHD1693	SCREW	1	(-S)(-T)
B2	VHD1853	SCREW	1	(-K)(-A)(-TA)
B3	VHD1693	SCREW	1	(-S)(-T)
B3	VHD1853	SCREW	1	(-K)(-A)(-TA)
B4	VHD1652	SCREW	1	
B5	VHD1652	SCREW	1	
B6	VHD1921	SCREW	1	
B7	VHD1921	SCREW	1	
B8	VHD1926	SCREW	1	
B9	VHD1954	SCREW	1	(-S)(-T)
B9	VHD1956	SCREW	1	(-K)(-A)(-TA)
B10	VHD1954	SCREW	1	(-S)(-T)
B10	VHD1956	SCREW	1	(-K)(-A)(-TA)
B11	VHD1954	SCREW	1	(-S)(-T)
B11	VHD1956	SCREW	1	(-K)(-A)(-TA)
B12	VHD1954	SCREW	1	(-S)(-T)
B12	VHD1956	SCREW	1	(-K)(-A)(-TA)
B13	VHD1957	SCREW	1	(-S)(-T)
B13	VHD1958	SCREW	1	(-K)(-A)(-TA)
B14	VHD1957	SCREW	1	(-S)(-T)
B14	VHD1958	SCREW	1	(-K)(-A)(-TA)
B15	VHD1957	SCREW	1	(-S)(-T)
B15	VHD1958	SCREW	1	(-K)(-A)(-TA)
B16	VHD1803	SCREW	1	
B17	VHD1924	SCREW	1	
B18	VHD1924	SCREW	1	
B19	XQN16+BJ3FN	SCREW	1	
B20	VHD1652	SCREW	1	
B201	VHD1871	SCREW	1	
B202	VHD1871	SCREW	1	
B203	VHD1871	SCREW	1	
B207	VHD1871	SCREW	1	
B208	XQN14+CJ4FN	SCREW	1	
B209	XQN14+CJ4FN	SCREW	1	
B210	XQN14+CJ4FN	SCREW	1	
B211	XQN14+CJ4FN	SCREW	1	
B212	XQN14+CJ4FN	SCREW	1	
B213	XQN14+CJ4FN	SCREW	1	
B214	XQN14+CJ4FN	SCREW	1	

Ref.No.	Part No.	Part Name & Description	Pcs	Remarks
301	VPF1137	CAMERA BAG	1	
⚠ 302	K2CJ2DA00006	AC CORD W/PLUG	1	TZ5PR
⚠ 302	K2CT3CA00004	AC CORD W/PLUG	1	TZ5EB,SG,
				TZ15GC
⚠ 302	K2CQ2CA00006	AC CORD W/PLUG	1	TZ5EE,EF,EG,E,SG,
				TZ15GC
⚠ 302	K2CR2CA00003	AC CORD W/PLUG	1	TZ15GD
⚠ 302	K2CA2CA00020	AC CORD W/PLUG	1	TZ15GK
⚠ 302	K2CJ2DA00008	AC CORD W/PLUG	1	TZ15GN
⚠ 302	K2CA2CA00027	AC CORD W/PLUG	1	TZ15GT
⚠ 302	K2CP2YY00001	AC CORD W/PLUG	1	TZ15GJ
⚠ 303	----------	BATTERY PACK	1	TZ5P,PC
⚠ 303	----------	BATTERY PACK	1	(EXCEPT TZ5P,PC)
⚠ 304	DE-A45BA	BATTERY CHARGER	1	TZ5P,PC,PL
⚠ 304	DE-A46DA	BATTERY CHARGER	1	TZ5PR
⚠ 304	DE-A46AA	BATTERY CHARGER	1	TZ5EB,EF,EG,E,
				TZ15GN
⚠ 304	DE-A46BA	BATTERY CHARGER	1	TZ5EE,SG,
				TZ15GC,GK,GJ,GD
⚠ 304	DE-A46CA	BATTERY CHARGER	1	TZ15GT
305	K1HA08CD0019	USB CABLE	1	
306	K1HA08CD0020	AV CABLE	1	
307	VFC4297	HAND STRAP	1	
308	VFF0400-S	CD-ROM	1	TZ5P,PC
308	VFF0401-S	CD-ROM	1	(EXCEPT TZ5P/PC)
309	VPK3446	PACKING CASE	1	TZ5P-S,PC-S
309	VPK3517	PACKING CASE	1	TZ5P-K,PC-K
309	VPK3525	PACKING CASE	1	TZ5P-A,PC-A
309	VPK3447	PACKING CASE	1	TZ5PL-S,EE-S,EB-S,EF-S,
				EG-S,E-S,SG-S
309	VPK3518	PACKING CASE	1	TZ5PL-K,EE-K,PR-K,EB-K,
				EF-K,EG-K,E-K,SG-K
309	VPK3526	PACKING CASE	1	TZ5PL-A,EE-A,PR-A,EG-A,
				E-A
309	VPK3560	PACKING CASE	1	(-TA)
309	VPK3565	PACKING CASE	1	TZ5SG-T
309	VPK3448	PACKING CASE	1	TZ15GC-S,GJ-S,GN-S,GT-S
309	VPK3519	PACKING CASE	1	TZ15GC-K,GJ-K,GD-K,GN-K,
				GT-K
309	VPK3523	PACKING CASE	1	TZ15GC-T,GJ-T
309	VPK3449	PACKING CASE	1	TZ15GK-S
309	VPK3520	PACKING CASE	1	TZ15GK-K
309	VPK3524	PACKING CASE	1	TZ15GK-T
310	VPN6659	CUSHION	1	
311	VPF1294	BAG, POLYETHYLENE	1	
312	VFF0413	CD-ROM (INSTRUCTION BOOK)	1	TZ5PL,PR,EG,SG,
				TZ15GC
313	VQT1P79	INSTRUCTION BOOK	1	TZ5P,PC
		(ENGLISH)		
313	VQT1P80	INSTRUCTION BOOK	1	TZ5P
		(SPANISH)		
313	VQT1P81	INSTRUCTION BOOK	1	TZ5PC
		(CANADIAN FRENCH)		
313	VQT1P82	SIMPLIFIED O/I	1	TZ5PL
		(ENGLISH/SPANISH)		
313	VQT1P83	SIMPLIFIED O/I	1	TZ5PL
		(PORTUGUESE)		
313	VQT1P86	SIMPLIFIED O/I	1	TZ5PR,EG
		(SPANISH/PORTUGUESE)		
313	VQT1P91	INSTRUCTION BOOK	1	TZ5EB
		(ENGLISH)		
313	VQT1P92	INSTRUCTION BOOK	1	TZ5EE
		(RUSSIAN)		
313	VQT1P93	INSTRUCTION BOOK	1	TZ5EE
		(UKRAINIAN)		
313	VQT1P90	INSTRUCTION BOOK	1	TZ5EF
		(FRENCH)		
313	VQT1P84	SIMPLIFIED O/I	1	TZ5EG
		(GERMAN/FRENCH)		
313	VQT1P85	SIMPLIFIED O/I	1	TZ5EG
		(ITALIAN/DUTCH)		
313	VQT1P87	SIMPLIFIED O/I	1	TZ5E
		(SWEDISH/DANISH)		
313	VQT1P88	SIMPLIFIED O/I	1	TZ5E
		(POLISH/CZECH)		

Ref.No.	Part No.	Part Name & Description	Pcs	Remarks
313	VQT1P89	SIMPLIFIED O/I	1	TZ5E
		(HUNGARIAN/FINNISH)		
313	VQT1P94	SIMPLIFIED O/I	1	TZ5SG,
		(ENGLISH/		TZ15GC
		CHINESE(TRADITIONAL))		
313	VQT1P95	SIMPLIFIED O/I	1	TZ5SG,
		(ARABIC/PERSIAN)		TZ15GC
313	VQT1P99	INSTRUCTION BOOK	1	TZ15GD
		(KOREAN)		
313	VQT1P97	INSTRUCTION BOOK	1	TZ15GK
		(CHINESE(SIMPLIFIED))		
313	VQT1P98	INSTRUCTION BOOK	1	TZ15GN
		(ENGLISH)		
313	VQT1P96	INSTRUCTION BOOK	1	TZ15GT
		(CHINESE(TRADITIONAL))		
313	VQT1Q79	INSTRUCTION BOOK	1	TZ15GJ
		(THAI)		
314	VQT1M47	O/I SOFTWARE	1	TZ5P,PC
		(ENGLISH/CANADIAN FRENCH)		
314	VQT1M48	O/I SOFTWARE	1	TZ5PL
		(ENGLISH/SPANISH/		
		PORTUGUESE)		
314	VQT1M49	O/I SOFTWARE	1	TZ5PR,EG
		(GERMAN/ITALIAN/FRENCH/		
		DUTCH/SPANISH/		
		PORTUGUESE)		
314	VQT1M52	O/I SOFTWARE	1	TZ5EB,
		(ENGLISH)		TZ15GN
314	VQT1M53	O/I SOFTWARE	1	TZ5EE
		(RUSSIAN/UKRAINIAN)		
314	VQT1M51	O/I SOFTWARE	1	TZ5EF
		(FRENCH)		
314	VQT1M50	O/I SOFTWARE	1	TZ5E
		(FINNISH/SWEDISH/DANISH/		
		POLISH/CZECH/HUNGARIAN)		
314	VQT1M54	O/I SOFTWARE	1	TZ5SG,
		(ENGLISH/		TZ15GC
		CHINESE(TRADITIONAL)/		
		ARABIC/PERSIAN)		
314	VQT1M57	O/I SOFTWARE	1	TZ15GD
		(KOREAN)		
314	VQT1M56	O/I SOFTWARE	1	TZ15GK
		(CHINESE(SIMPLIFIED))		
314	VQT1M55	O/I SOFTWARE	1	TZ15GT
		(CHINESE(TRADITIONAL))		
314	VQT1Q76	O/I SOFTWARE	1	TZ15GJ
		(THAI)		
315	VYQ3680	BATTERY CARRYING CASE U	1	(EXCEPT TZ15GK)
315	VYQ4386	BATTERY CARRYING CASE U	1	TZ15GK
317	VPN6664	PAD	1	TZ5PL,EE,PR,EF,EG,E,
				TZ15GK,GJ,GD,GN,GT
317	VPN6666	PAD	1	TZ5EB,SG,
				TZ15GC

S7. Exploded View

S7.1. Frame and Casing Section

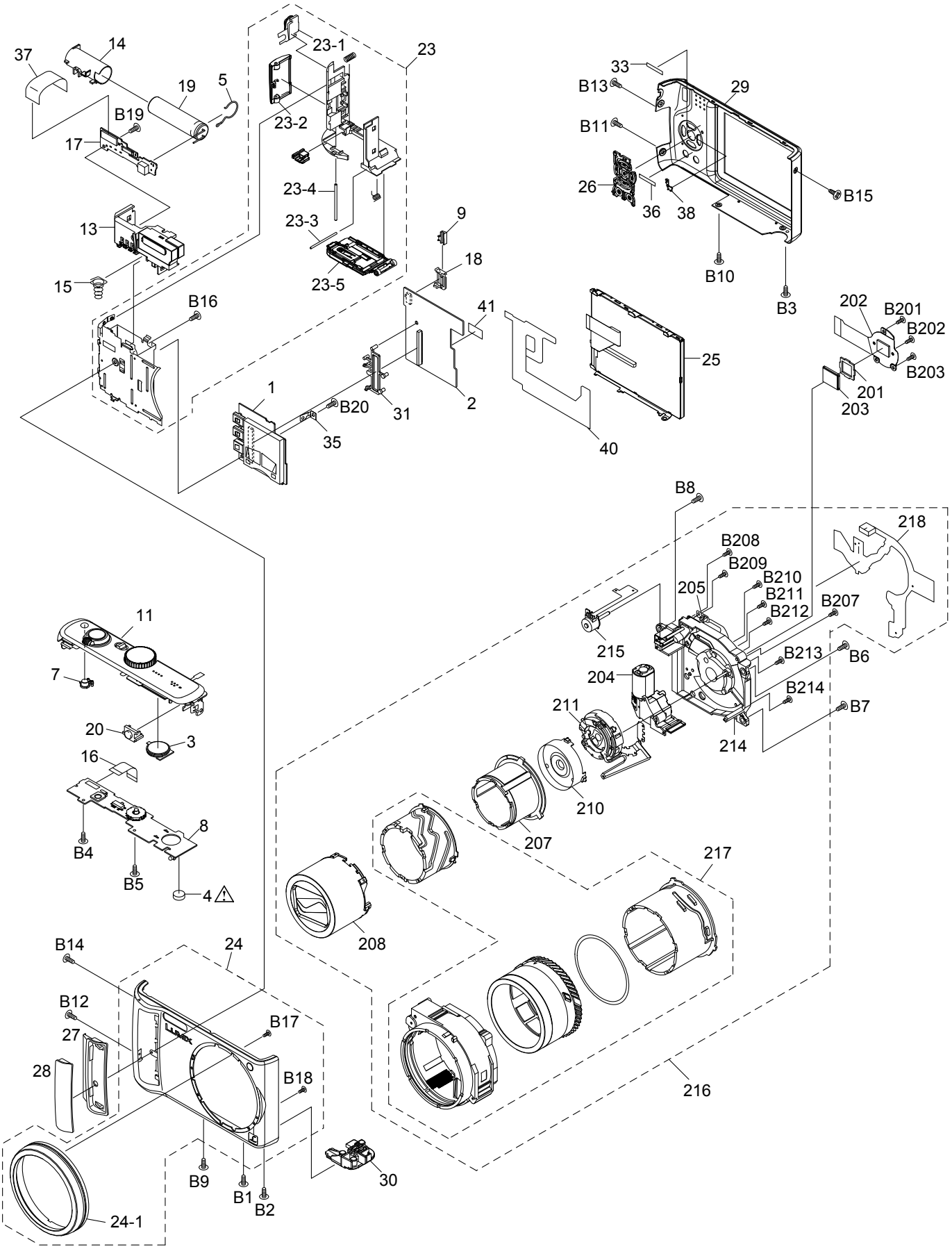

S7.2. Packing Parts and Accessories Section