Panasonic

ORDER NO. VM1612007CE

B27

Service Manual

4K Video Camera

Model No. **HC-X1E**
HC-X1EE
HC-X1PP
HC-X1GC
HC-X1GD

Colour
Black Type

⚠ WARNING

This service information is designed for experienced repair technicians only and is not designed for use by the general public.
It does not contain warnings or cautions to advise non-technical individuals of potential dangers in attempting to service a product.
Products powered by electricity should be serviced or repaired only by experienced professional technicians. Any attempt to service or repair the product or products dealt with in this service information by anyone else could result in serious injury or death.

© Panasonic Corporation 2016 Unauthorized copying and distribution is a violation of law.

1 Safety Precautions

1.1 General Guidelines

1. **IMPORTANT SAFETY NOTICE**
   There are special components used in this equipment which are important for safety. These parts are marked by ⚠ in the Schematic Diagrams, Circuit Board Layout, Exploded Views and Replacement Parts List. It is essential that these critical parts should be replaced with manufacturer's specified parts to prevent X-RADIATION, shock, fire, or other hazards. Do not modify the original design without permission of manufacturer.

2. An Isolation Transformer should always be used during the servicing of AC Adaptor whose chassis is not isolated from the AC power line. Use a transformer of adequate power rating as this protects the technician from accidents resulting in personal injury from electrical shocks. It will also protect AC Adaptor from being damaged by accidental shorting that may occur during servicing.

3. When servicing, observe the original lead dress. If a short circuit is found, replace all parts which have been overheated or damaged by the short circuit.
4. After servicing, see to it that all the protective devices such as insulation barriers, insulation papers shields are properly installed.
5. After servicing, make the following leakage current checks to prevent the customer from being exposed to shock hazards.

1.2 Leakage Current Cold Check

1. Unplug the AC cord and connect a jumper between the two prongs on the plug.
2. Measure the resistance value, with an ohmmeter, between the jumpered AC plug and each exposed metallic cabinet part on the equipment such as screwheads, connectors, control shafts, etc. When the exposed metallic part has a return path to the chassis, the reading should be between 1 MΩ and 5.2 MΩ. When the exposed metal does not have a return path to the chassis, the reading must be infinity.

1.3 Leakage Current Hot Check (See Figure. 1)

1. Plug the AC cord directly into the AC outlet. Do not use an isolation transformer for this check.
2. Connect a 1.5 kΩ, 10 W resistor, in parallel with a 0.15 μF capacitor, between each exposed metallic part on the set and a good earth ground, as shown in Figure. 1.
3. Use an AC voltmeter, with 1 kΩ/V or more sensitivity, to measure the potential across the resistor.
4. Check each exposed metallic part, and measure the voltage at each point.
5. Reverse the AC plug in the AC outlet and repeat each of the above measurements.
6. The potential at any point should not exceed 0.75 V RMS. A leakage current tester (Simpson Model 229 or equivalent) may be used to make the hot checks, leakage current must not exceed 1/2 mA. In case a measurement is outside of the limits specified, there is a possibility of a shock hazard, and the equipment should be repaired and rechecked before it is returned to the customer.

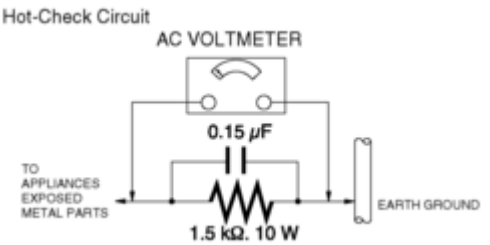
Hot-Check Circuit
AC VOLTMETER
0.15 μF
TO
APPLIANCES
EXPOSED
METAL PARTS
EARTH GROUND
1.5 kΩ. 10 W

Figure. 1

2 Warning

2.1 Prevention of Electrostatic Discharge (ESD) to Electrostatically Sensitive (ES) Devices

Some semiconductor (solid state) devices can be damaged easily by static electricity. Such components commonly are called Electrostatically Sensitive (ES) Devices. Examples of typical ES devices are integrated circuits and some field-effect transistors and semiconductor "chip" components. The following techniques should be used to help reduce the incidence of component damage caused by electrostatic discharge (ESD).

1. Immediately before handling any semiconductor component or semiconductor-equipped assembly, drain off any ESD on your body by touching a known earth ground. Alternatively, obtain and wear a commercially available discharging ESD wrist strap, which should be removed for potential shock reasons prior to applying power to the unit under test.

2. After removing an electrical assembly equipped with ES devices, place the assembly on a conductive surface such as aluminum foil, to prevent electrostatic charge buildup or exposure of the assembly.
3. Use only a grounded-tip soldering iron to solder or unsolder ES devices.
4. Use only an antistatic solder removal device. Some solder removal devices not classified as “antistatic (ESD protected)” can generate electrical charge sufficient to damage ES devices.
5. Do not use freon-propelled chemicals. These can generate electrical charges sufficient to damage ES devices.
6. Do not remove a replacement ES device from its protective package until immediately before you are ready to install it. (Most replacement ES devices are packaged with leads electrically shorted together by conductive foam, aluminum foil or comparable conductive material).

7. Immediately before removing the protective material from the leads of a replacement ES device, touch the protective material to the chassis or circuit assembly into which the device will be installed.

   CAUTION :
   Be sure no power is applied to the chassis or circuit, and observe all other safety precautions.
8. Minimize bodily motions when handling unpackaged replacement ES devices. (Otherwise harmless motion such as the brushing together of your clothes fabric or the lifting of your foot from a carpeted floor can generate static electricity (ESD) sufficient to damage an ES device).

2.2 How to Recycle the Lithium Ion Battery (U.S. Only)

ENGLISH

A lithium ion battery that is recyclable powers the product you have purchased. Please call 1-800-8-BATTERY for information on how to recycle this battery.

FRANÇAIS

L'appareil que vous vous êtes procuré est alimenté par une batterie au lithium-ion recyclable. Pour des renseignements sur le recyclage de la batterie, veuillez composer le 1-800-8-BATTERY.

2.3 Caution for AC Cord (For E/GC)

2.3.1 Information for Your Safety

IMPORTANT
Your attention is drawn to the fact that recording of pre-recorded tapes or discs or other published or broadcast material may infringe copyright laws.

WARNING
To reduce the risk of fire or shock hazard, do not expose this equipment to rain or moisture.

CAUTION
To reduce the risk of fire or shock hazard and annoying interference, use the recommended accessories only.

FOR YOUR SAFETY
DO NOT REMOVE THE OUTER COVER
To prevent electric shock, do not remove the cover. No user serviceable parts inside. Refer servicing to qualified service personnel.

2.3.2 Caution for AC Mains Lead

For your safety, please read the following text carefully.
This appliance is supplied with a moulded three-pin mains plug for your safety and convenience.
A 5-ampere fuse is fitted in this plug.
Should the fuse need to be replaced please ensure that the replacement fuse has a rating of 5 amperes and it is approved by ASTA or BSI to BS1362
Check for the ASTA mark or the BSI mark on the body of the fuse.

ASTA mark	BSI mark

If the plug contains a removable fuse cover you must ensure that it is refitted when the fuse is replaced.
If you lose the fuse cover, the plug must not be used until a replacement cover is obtained.
A replacement fuse cover can be purchased from your local Panasonic Dealer.
If the fitted moulded plug is unsuitable for the socket outlet in your home then the fuse should be removed and the plug cut off and disposed of safety.
There is a danger of severe electrical shock if the cut off plug is inserted into any 13-ampere socket.
If a new plug is to be fitted please observe the wiring code as shown below.
If in any doubt, please consult a qualified electrician.

2.3.2.1 Important

The wires in this mains lead are coloured in accordance with the following code:

Blue	Neutral
Brown	Live

As the colours of the wires in the mains lead of this appliance may not correspond with the coloured markings identifying the terminals in your plug, proceed as follows:
The wire which is coloured BLUE must be connected to the terminal in the plug which is marked with the letter N or coloured BLACK.
The wire which is coloured BROWN must be connected to the terminal in the plug which is marked with the letter L or coloured RED.
Under no circumstances should either of these wires be connected to the earth terminal of the three pin plug, marked with the letter E or the Earth Symbol.

Earth Symbol	⏚

2.3.2.2 Before Use

Remove the Connector Cover as follows.

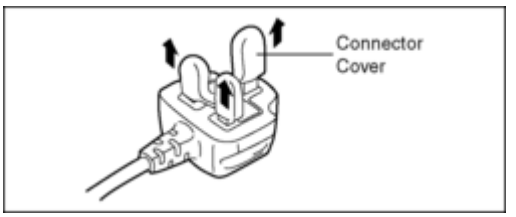

2.3.2.3 How to Replace the Fuse

1. Remove the Fuse Cover with a screwdriver.

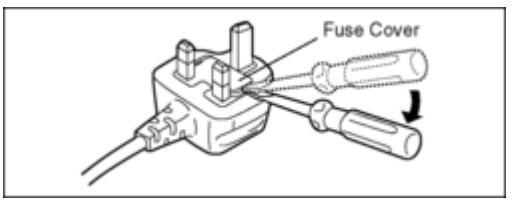

2. Replace the fuse and attach the Fuse cover.

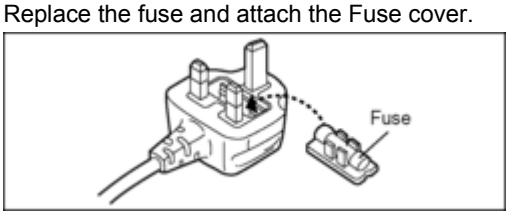

2.4 How to Replace the Lithium Battery

2.4.1 Replacement Procedure

1. Remove the SIDE R OPERATION P.C.B.. (Refer to Disassembly Procedures.)
2. Remove the Lithium battery (Ref. No. “B6951” at foil side of SIDE R OPERATION P.C.B.) and then replace it into new one.

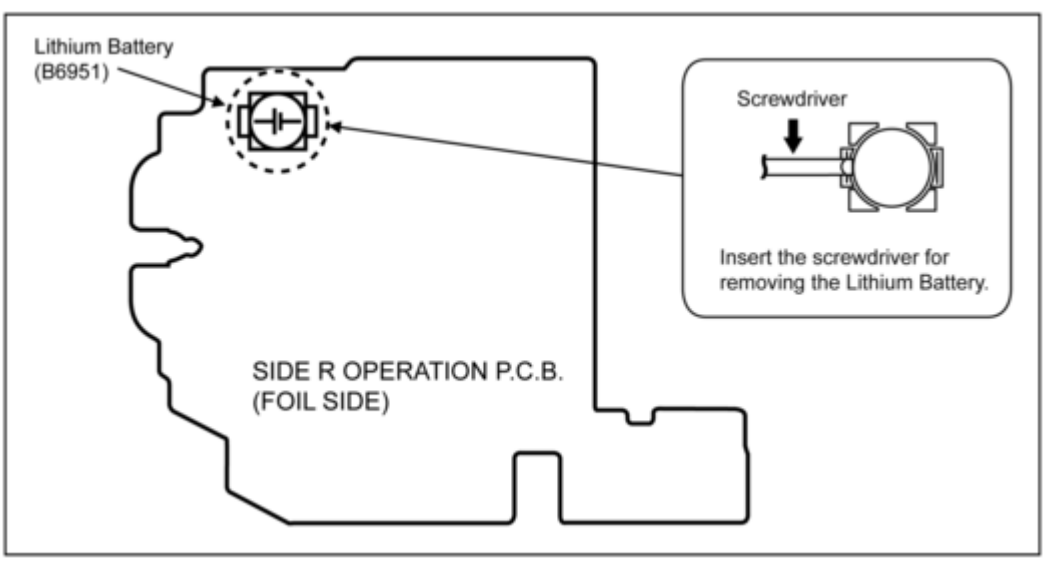

NOTE:
This Lithium battery is a critical component.
It must never be subjected to excessive heat or discharge.
It must therefore only be fitted in requirement designed specifically for its use.
Replacement batteries must be of same type and manufacture.

They must be fitted in the same manner and location as the original battery, with the correct polarity contacts observed.
Do not attempt to re-charge the old battery or re-use it for any other purpose.
It should be disposed of in waste products destined for burial rather than incineration.

(For English)

CAUTION

Danger of explosion if battery is incorrectly replaced.
Replace only with the same or equivalent type recommended by the manufacturer.
Dispose of used batteries according to the manufacturer's instructions.

(For German)

ACHTUNG

Explosionsgefahr bei falschem Anbringen der Batterie. Ersetzen Sie nur mit einem äquivalentem vom Hersteller empfohlenem Typ.
Behandeln Sie gebrauchte Batterien nach den Anweisungen des Herstellers.

(For French)

MISE EN GARDE

Une batterie de remplacement inappropriée peut exploser. Ne remplacez qu'avec une batterie identique ou d'un type recommandé par le fabricant. L'élimination des batteries usées doit être faite conformément aux instructions du manufacturier.

NOTE:
Above caution is applicable for a battery pack which is for HC-X1 series, as well.

3 Service Navigation

3.1 Introduction

This service manual contains technical information, which allow service personnel's to understand and service this model.
Please place orders using the parts list and not the drawing reference numbers.
If the circuit is changed or modified, the information will be followed by service manual to be controlled with original service manual.

3.2 General Description About Lead Free Solder (PbF)

The lead free solder has been used in the mounting process of all electrical components on the printed circuit boards used for this equipment in considering the globally environmental conservation.
The normal solder is the alloy of tin (Sn) and lead (Pb). On the other hand, the lead free solder is the alloy mainly consists of tin (Sn), silver (Ag) and Copper (Cu), and the melting point of the lead free solder is higher approx.30°C (86°F) more than that of the normal solder.

Distinction of P.C.B. Lead Free Solder being used

The letter of "PbF" is printed either foil side or components side on the P.C.B. using the lead free solder.(See right figure)	PbF

Service caution for repair work using Lead Free Solder (PbF)

- The lead free solder has to be used when repairing the equipment for which the lead free solder is used. (Definition: The letter of "PbF" is printed on the P.C.B. using the lead free solder.)
- To put lead free solder, it should be well molten and mixed with the original lead free solder.
- Remove the remaining lead free solder on the P.C.B. cleanly for soldering of the new IC.
- Since the melting point of the lead free solder is higher than that of the normal lead solder, it takes the longer time to melt the lead free solder.
- Use the soldering iron (more than 70W) equipped with the temperature control after setting the temperature at 350±30°C (662±86°F).

Recommended Lead Free Solder (Service Parts Route.)

- The following 3 types of lead free solder are available through the service parts route.
  SVKZ000001----------(0.3mm 100g Reel)
  SVKZ000002----------(0.6mm 100g Reel)
  SVKZ000003----------(1.0mm 100g Reel)

Note
* Ingredient: Tin (Sn) 96.5%, Silver (Ag) 3.0%, Copper (Cu) 0.5%. (Flux cored)

3.3 How to Define the Model Suffix (NTSC or PAL model)

There are four kinds of HC-X1.

- a) HC-X1PP

- b) HC-X1E/EE
- c) HC-X1GC
- d) HC-X1GD

What is the difference is that the “Factory Setting” data which is stored in Flash ROM mounted on Main P.C.B..

3.3.1 Defining methods:

To define the model suffix to be serviced, refer to the rating label and caution label which are putted on the Unit.

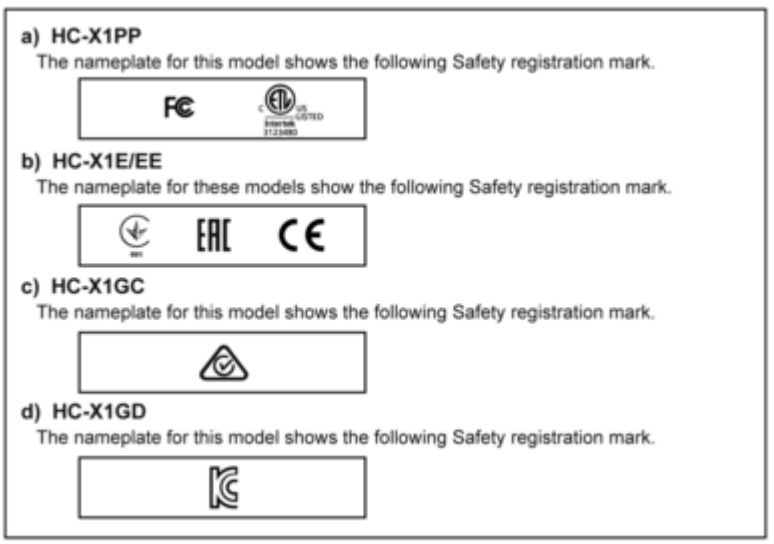

NOTE:
After replacing the MAIN P.C.B., be sure to achieve adjustment.

3.4 Baking of replacement IC and defective P.C.B.

When replacing the CSP/BGA/QFN type IC mounted on the P.C.B., the problem of IC crack or foil pattern breaking in the P.C.B.
might sometimes occur by rapid heating.
In order to improve the success rate of IC replacement for repair, it would be required to work out baking of replacement IC and defective P.C.B. before replacing IC.
Please refer the way of baking as follows.
Replacement IC and defective P.C.B. must be put in the heater together.

- Baking temperature and time (Hour)
  80°C / 24 hour

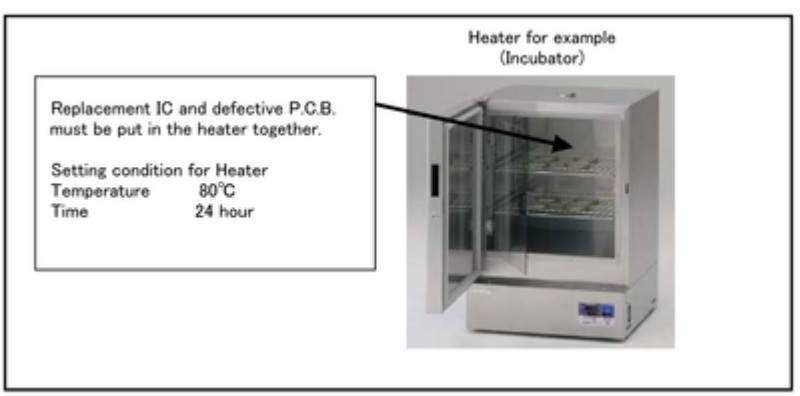

4 Specifications

The following specification is for HC-X1E/GC.
Some specifications may differ depending on model suffix.
The page number in this chapter does not show the page number of this service manual.

4K Video Camera

General

Power:
DC 7.28 V (When using battery)
DC 12 V (When using AC adaptor)
Power consumption:
19.7 W (When using LCD monitor)

indicates safety information

Ambient operating temperature:
0 °C to 40 °C
Ambient operating humidity:
10%RH to 80%RH (no condensation)
Mass:
Approx. 2.0 kg
(body only, excluding lens hood, battery, and accessories)
Approx. 2.4 kg
(including lens hood, supplied battery, and eye cup)
Dimensions (W×H×D):
173 mm×195 mm×346 mm
(excluding eye cup and projecting parts)

Camera unit

Pickup device:
1.0-type (effective size) MOS solid state image sensor
Number of pixels:
FHD (1920×1080), UHD (3840×2160);
8.79 million pixels
4K (4096×2160) 24.00p; 9.46 million pixels
Lens:
Optical image stabilizer lens, optical 20× motorized zoom
F value (focal length)
F2.8 to F4.5 (f=8.8 mm to 176 mm)
35 mm conversion
FHD (1920×1080), UHD (3840×2160);
25.4 mm to 508.0 mm
4K (4096×2160) 24.00p;
24.0 mm to 480.0 mm
Filter diameter; 67 mm
ND filter; OFF, 1/4, 1/16, 1/64
Shortest shooting distance (M.O.D);
1.0 m from the lens
IR filter; incorporates the ON/OFF control function
Gain setting:
L/M/H selector button (toggle button)
In normal mode; 0 dB to 24 dB
When [EXTENDED SENSITIVITY] is enabled;
−3 dB to 24 dB
- Adjustable in 1 dB steps (automatic setting can also be assigned to L/M/H.)
- When assigning [SUPER GAIN] to the USER button: 30 dB or 36 dB

Color temperature setting:
[ATW], [ATW LOCK], [Ach], [Bch],
preset 3200K, preset 5600K, VAR (2000K to 15000K)

Shutter speed:
When [SYSTEM FREQ] = [59.94Hz]
- 60i/60p mode;
  1/60, 1/100, 1/120, 1/180, 1/250, 1/350, 1/500, 1/750, 1/1000, 1/1500, 1/2000, 1/3000, 1/4000, 1/8000 sec.
- 30p mode;
  1/30, 1/50, 1/60, 1/100, 1/120, 1/180, 1/250, 1/350, 1/500, 1/750, 1/1000, 1/1500, 1/2000, 1/3000, 1/4000, 1/8000 sec.
- 24p mode;
  1/24, 1/48, 1/50, 1/60, 1/100, 1/120, 1/180, 1/250, 1/350, 1/500, 1/750, 1/1000, 1/1500, 1/2000, 1/3000, 1/4000, 1/8000 sec.

When [SYSTEM FREQ] = [50.00Hz]
- 50i/50p mode;
  1/50, 1/60, 1/100, 1/125, 1/180, 1/250, 1/350, 1/500, 1/750, 1/1000, 1/1500, 1/2000, 1/3000, 1/4000, 1/8000 sec.
- 25p mode;
  1/25, 1/50, 1/60, 1/100, 1/125, 1/180, 1/250, 1/350, 1/500, 1/750, 1/1000, 1/1500, 1/2000, 1/3000, 1/4000, 1/8000 sec.

Slow shutter speed:
When [SYSTEM FREQ] = [59.94Hz]
- 60i/60p mode;
  1/2, 1/4, 1/8, 1/15, 1/30 sec.
- 30p mode;
  1/2, 1/4, 1/8, 1/15 sec.
- 24p mode;
  1/2, 1/3, 1/6, 1/12 sec.

When [SYSTEM FREQ] = [50.00Hz]
- 50i/50p mode;
  1/2, 1/3, 1/6, 1/12, 1/25 sec.
- 25p mode;
  1/2, 1/3, 1/6, 1/12 sec.

Synchro scan shutter:
When [SYSTEM FREQ] = [59.94Hz]
- 59.94i/59.94p;
  1/60.0 to 1/249.7 sec.
- 29.97p;
  1/30.0 to 1/249.7 sec.
- 23.98p;
  1/24.0 to 1/249.6 sec.
- 24.00p;
  1/24.0 to 1/249.9 sec.

When [SYSTEM FREQ] = [50.00Hz]
- 50i/50p;
  1/50.0 to 1/250.0 sec.
- 25p;
  1/25.0 to 1/250.0 sec.

VFR recording frame rate:
When [SYSTEM FREQ] = [59.94Hz]
- 30p mode;
  2, 15, 26, 28, 30, 32, 34, 45, 60 (fps)
- 24p mode;
  2, 12, 20, 22, 24, 26, 28, 36, 48, 60 (fps)

When [SYSTEM FREQ] = [50.00Hz]
- 25p mode;
  2, 12, 21, 23, 25, 27, 30, 37, 50 (fps)

Super Slow Recording:
When [SYSTEM FREQ] = [59.94Hz]
Recording frame rate; FHD 120 fps
Slow motion effect;
1/4 the normal speed (30p mode),
1/5 the normal speed (24p mode)
When [SYSTEM FREQ] = [50.00Hz]
Recording frame rate; FHD 100 fps
Slow motion effect;
1/4 the normal speed (25p mode)

Sensitivity:
When [HIGH SENS. MODE] = [HIGH SENS.]
F11 (2000 lx, 3200 K, 89.9% reflection, 1080/59.94i)
F12 (2000 lx, 3200 K, 89.9% reflection, 1080/50.00i)

Minimum subject illumination:
0.2 lx (F2.8, gain 18 dB,
shutter speed 1/2 sec.,
when [HIGH SENS. MODE] = [HIGH SENS.])

Digital zoom:
2×/5×/10×/i.Zoom (max. 30×)

Lens hood:
Hood with lens cover

Memory card recorder

Recording media:
SDHC Memory Card (4 GB to 32 GB)/
SDXC Memory Card (48 GB to 128 GB);
UHS-I supported
Refer to page 23 for details on SD cards usable in this unit.

Recording slots:
2 slots

System frequency:
59.94 Hz, 50.00 Hz

Motion picture recording:
Recording method; MOV, MP4, AVCHD
Recording format;

- When [REC MODE] = [MOV], [MP4]
  [4K 2160/24.00p 100M];
  Average 100 Mbps (VBR)

(When [SYSTEM FREQ] = [59.94Hz])
[UHD 2160/59.94p 150M];
Average 150 Mbps (VBR)
[UHD 2160/29.97p 100M]/
[UHD 2160/23.98p 100M];
Average 100 Mbps (VBR)
[FHD 1080/59.94p ALL-I 200M]/
[FHD 1080/29.97p ALL-I 200M]/
[FHD 1080/23.98p ALL-I 200M];
Average 200 Mbps (VBR)
[FHD 1080/59.94p 100M];
Average 100 Mbps (VBR)
[FHD 1080/59.94p 50M]/
[FHD 1080/29.97p 50M]/
[FHD 1080/23.98p 50M]/
[FHD 1080/59.94i 50M];
Average 50 Mbps (VBR)

(When [SYSTEM FREQ] = [50.00Hz])
[UHD 2160/50.00p 150M];
Average 150 Mbps (VBR)
[UHD 2160/25.00p 100M];
Average 100 Mbps (VBR)
[FHD 1080/50.00p ALL-I 200M]/
[FHD 1080/25.00p ALL-I 200M];
Average 200 Mbps (VBR)
[FHD 1080/50.00p 100M];
Average 100 Mbps (VBR)
[FHD 1080/50.00p 50M]/
[FHD 1080/25.00p 50M]/
[FHD 1080/50.00i 50M];
Average 50 Mbps (VBR)

- When [REC MODE] = [AVCHD]

(When [SYSTEM FREQ] = [59.94Hz])
[PS 1080/59.94p]; Average 25 Mbps (VBR)
[PH 1080/59.94i]; Average 21 Mbps (VBR)
[PH 1080/23.98p]; Average 21 Mbps (VBR)
[HA 1080/59.94i]; Average 17 Mbps (VBR)
[HE 1080/59.94i]; Average 5 Mbps (VBR)
[PM 720/59.94p]; Average 8 Mbps (VBR)
[SA 480/59.94i]
(When [ASPECT CONVERT] = [SIDE CROP], [SQUEEZE]);
Average 9 Mbps (VBR)

(When [SYSTEM FREQ] = [50.00Hz])
[PS 1080/50.00p]; Average 25 Mbps (VBR)
[PH 1080/50.00i]; Average 21 Mbps (VBR)
[HA 1080/50.00i]; Average 17 Mbps (VBR)
[HE 1080/50.00i]; Average 5 Mbps (VBR)
[PM 720/50.00p]; Average 8 Mbps (VBR)
[SA 576/50.00i]
(When [ASPECT CONVERT] = [SIDE CROP], [SQUEEZE]);
Average 9 Mbps (VBR)

Refer to "Operating Instructions" (PDF format) for the picture size and recordable time of a motion picture.

Still picture recording:
Recording method;
JPEG corresponding DCF (Design rule for Camera File system, based on Exif 2.2 standard)
Refer to "Operating Instructions" (PDF format) for picture size of a still picture and number of recordable pictures.

2 Slot function:
Relay, simultaneous, background*1, dual codec

*1 Available with a recording format of 50 Mbps or less

Digital video

Video signal for external output:
8 bit 4:2:2*2

*2 It is set to 8 bit 4:2:0 when UHD 59.94p or UHD 50.00p is selected.

Recording video signal:
8 bit 4:2:0

Video compression format:
MPEG-4 AVC/H.264 High Profile
(MOV/MP4/AVCHD)

Digital audio

Recording audio signal:
48 kHz/16 bit 2CH

Audio compression format:
Linear PCM (MOV/MP4), Dolby Digital (AVCHD)

Headroom:
12 dB

Dual codec

Recording method:
MOV, MP4

Video compression format:
MPEG-4 AVC/H.264 High Profile

Audio compression format:
Linear PCM

Recording format:
When [DUAL CODEC REC] = [FHD 50Mbps]

- For main recording

[REC MODE] = [MOV]/[MP4]
[UHD 2160/29.97p 100M],
[UHD 2160/25.00p 100M],
[UHD 2160/23.98p 100M];
Average 100 Mbps (VBR)

- For sub recording

[REC MODE] = [MOV]/[MP4]*3
FHD 29.97p, 25.00p, 23.98p*4;
Average 50 Mbps (VBR)

When [DUAL CODEC REC] = [FHD 8Mbps]

- For main recording

[REC MODE] = [MOV]/[MP4]
[UHD 2160/29.97p 100M],
[UHD 2160/25.00p 100M],
[UHD 2160/23.98p 100M],
Average 100 Mbps (VBR)
[FHD 1080/59.94p ALL-I 200M],
[FHD 1080/50.00p ALL-I 200M],
[FHD 1080/29.97p ALL-I 200M],
[FHD 1080/25.00p ALL-I 200M],
[FHD 1080/23.98p ALL-I 200M];
Average 200 Mbps (VBR)
[FHD 1080/59.94p 100M],
[FHD 1080/50.00p 100M];
Average 100 Mbps (VBR)

- For sub recording

[REC MODE] = [MOV]
FHD 59.94p, 50.00p, 29.97p, 25.00p, 23.98p*4;
Average 8 Mbps (VBR)

*3 It records motion picture with the same [REC MODE] setting selected for main recording.

*4 It records motion picture in the same frame rate as that of the [REC FORMAT] setting selected for main recording.

Video input/output

VIDEO OUT terminal:
VIDEO OUT terminal ×1

HDMI OUT terminal:
HDMI×1,
(HDMI Type A, not compatible with VIERA Link)
Output format;
2160/59.94p/50.00p/29.97p/25.00p/24.00p/23.98p, 1080/59.94p/50.00p/29.97p/25.00p/24.00p/23.98p/59.94i/50.00i, 720/59.94p/50.00p, 480/59.94p, 576/50.00p

Audio input

Built-in microphone:
Supports stereo microphone

AUDIO INPUT1/AUDIO INPUT2 terminal:
XLR×2, 3-pin
Input high impedance, LINE/MIC/MIC+48 V (switch selection)

- LINE; +4 dBu/0 dBu (selectable menu)
- MIC; −40 dBu / −50 dBu / −60 dBu (selectable menu)

Audio output

HDMI OUT terminal:
2ch (Linear PCM)

AUDIO OUT terminal:
AUDIO OUT terminal ×2
Output level; 251 mV
Output impedance; 600 Ω

Headphone output terminal:
3.5 mm diameter stereo mini jack×1

Speaker:
Round type speaker with a diameter of 20 mm ×1

Other input/output

CAM REMOTE terminal:
2.5 mm diameter super mini jack×1 (ZOOM, S/S)
3.5 mm diameter mini jack×1 (FOCUS, IRIS)

USB HOST terminal:
Type A connector, 9-pin
In Recording mode;
USB 2.0 compatible (5 V, 0.5 A)
In Playback mode;
USB 3.0 compatible (5 V, 0.9 A), used for external media device connection*5, bus power supported

*5 External media device with a capacity of 32 GB or below or a capacity above 2 TB cannot be used

USB DEVICE terminal:
Type Micro B connector, 10-pin, USB 3.0 compatible, used for the mass storage function (read only)

DC input terminal:
DC 12 V (DC 11.4 V to 12.6 V), EIAJ type 4

Monitor

LCD monitor:
8.8 cm (3.5 ") liquid crystal monitor (Approx. 1150000 dots)

Viewfinder:
1.0 cm (0.39 ") OLED (organic EL display) (Approx. 2360000 dots, video display area; Approx. 1770000 dots)

AC adaptor

Power source:
AC ~ 100 V to 240 V,
50 Hz/60 Hz, 1.2 A
Power output:
DC ⎓ 12 V, 3.0 A

indicates safety information

Ambient operating temperature:
0 °C to 40 °C
Ambient operating humidity:
10%RH to 90%RH (no condensation)
Mass:
Approx. 225 g
Dimensions (W×H×D):
115 mm×37 mm×57 mm
(Excluding the DC cord portion)

Battery charger

Input voltage:
DC ⎓ 12 V, 3.0 A
Output voltage:
DC ⎓ 8.4 V, 4.0 A

indicates safety information

Charging current:
Max. 4000 mA
Ambient operating temperature:
0 °C to 40 °C
Ambient operating humidity:
10%RH to 80%RH (no condensation)
Mass:
Approx. 230 g
Dimensions (W×H×D):
130 mm×48 mm×107 mm

The symbols on this product (including the accessories) represent the following:

~	AC
⎓	DC
⧈	Class II equipment (The construction of the product is double-insulated.)

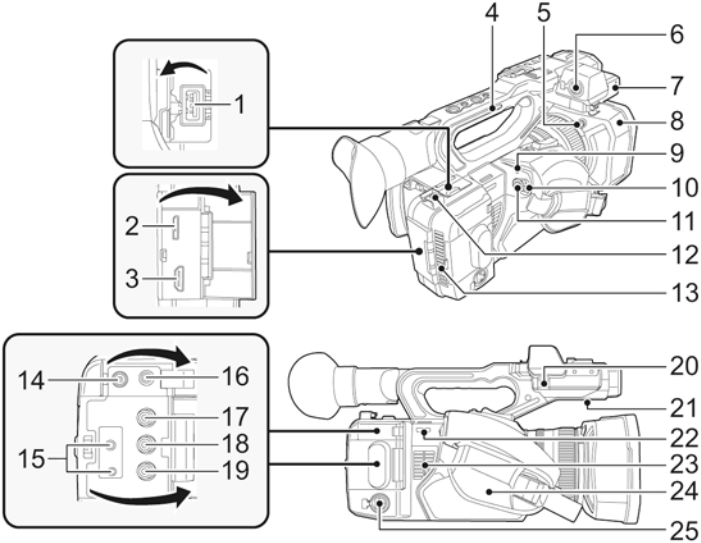

1 **USB HOST terminal**
2 **USB DEVICE terminal**
3 **HDMI OUT connector [HDMI]**
4 **Handle**
5 **Lens hood release button**
6 **Audio input terminal 1 (XLR 3 pin) [AUDIO INPUT1] (➜ 18)**
7 **Microphone holder attachment part (➜ 18)**
8 **Lens hood**
9 **Status indicator (➜ 25)**
10 **Power switch (➜ 25)**
11 **Recording start/stop button (➜ 30)**
12 **Cable holder**
- Secures an HDMI cable.

13 **Inlet (cooling fan)**
14 **DC input terminal [DC IN] (➜ 22)**
- Do not use any other AC adaptors except the supplied one.

15 **Camera remote terminal [CAM REMOTE]**
- FOCUS IRIS terminal (3.5 mm diameter mini jack)
- ZOOM S/S terminal (2.5 mm diameter super mini jack)

16 **Headphone terminal [🎧]**
17 **VIDEO OUT terminal**
18 **AUDIO OUT CH1 terminal**
19 **AUDIO OUT CH2 terminal**
20 **Microphone cable clamper (➜ 18)**
21 **Speaker**
22 **Shoulder strap fixture**
23 **Inlet (cooling fan)**
24 **Hand strap (➜ 17)**
25 **Audio input terminal 2 (XLR 3 pin) [AUDIO INPUT2] (➜ 18)**

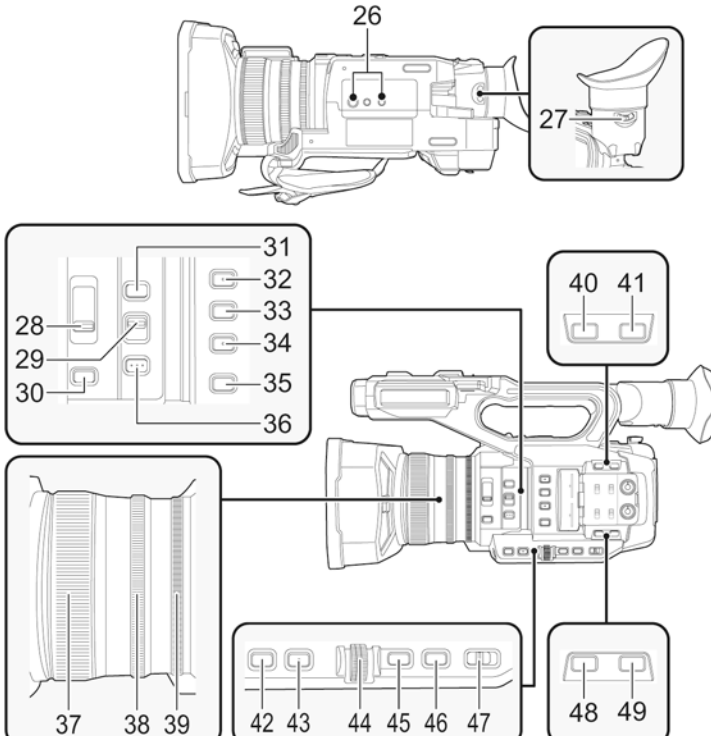

26 Tripod receptacle

- There are tripod mounting holes that are compatible with 1/4-20UNC and 3/8-16UNC screws. Use the size that matches the diameter of the tripod's fixing screw.
- Attaching a tripod with a screw length of 5.5 mm or more may damage the unit.

27 Eyepiece corrector lever (➜ 27)

28 ND filter switch [ND FILTER]

29 Focus Auto/Manual/∞ switch [FOCUS A/M/∞] (➜ 32)

30 Iris button [IRIS] (➜ 33)

31 FOCUS ASSIST button

32 User 1 button [USER1] (➜ 34)

33 User 2 button [USER2] (➜ 34)

34 User 3 button [USER3] (➜ 34)

35 Display/Mode check button [DISP/MODE CHK]

36 PUSH AUTO button

37 Focus ring (➜ 32)

38 Zoom ring (➜ 31)

39 Iris ring (➜ 33)

40 User 6 button [O.I.S.] (➜ 34)

41 User 7 button [LCD/EVF] (➜ 34)

42 Gain button [GAIN] (➜ 33)

43 White Balance button [WHITE BAL] (➜ 32)

44 Jog dial [SEL/PUSH SET] (➜ 32)

45 Menu button [MENU] (➜ 39)

46 Shutter speed button [SHUTTER] (➜ 33)

47 Auto/Manual switch [AUTO/MANU] (➜ 30)

48 User 4 button [WFM] (➜ 34)

49 User 5 button [ZEBRA] (➜ 34)

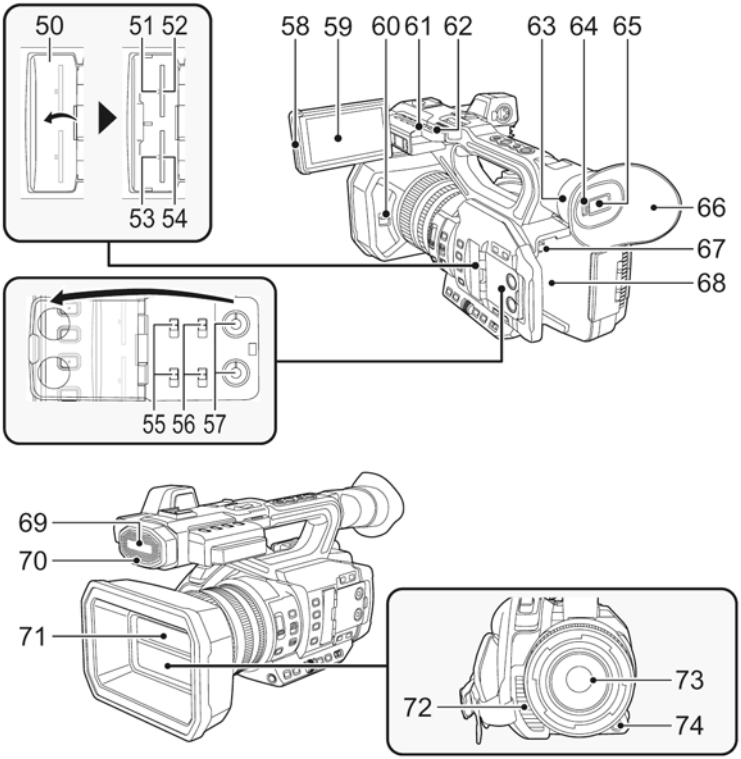

50 SD Card slot cover (➜ 24)
51 Access lamp (card 1) (➜ 24)
52 Card slot 1 (➜ 24)
53 Access lamp (card 2) (➜ 24)
54 Card slot 2 (➜ 24)
55 INPUT1 / INPUT2 switches
56 CH1 SELECT/CH2 SELECT switches
57 AUDIO LEVEL CH1/AUDIO LEVEL CH2 knobs
58 LCD monitor extract part (➜ 26)
59 LCD monitor (Touch screen) (➜ 27)
60 Lens cover open/close lever (➜ 17)
61 Recording lamp (Rear)
62 Shoulder strap fixture
63 Eye cup mount (➜ 17)
64 Eye sensor
65 Viewfinder (➜ 27)
66 Eye cup (➜ 17)
67 Battery release button [PUSH] (➜ 21)
68 Battery holder (➜ 21)
69 Built-in microphone
70 Recording lamp (Front)
71 Lens cover (➜ 17)
72 Exhaust opening (cooling fan)
73 Lens (LEICA DICOMAR)
74 User 9 button [AWB] (➜ 32, 34)

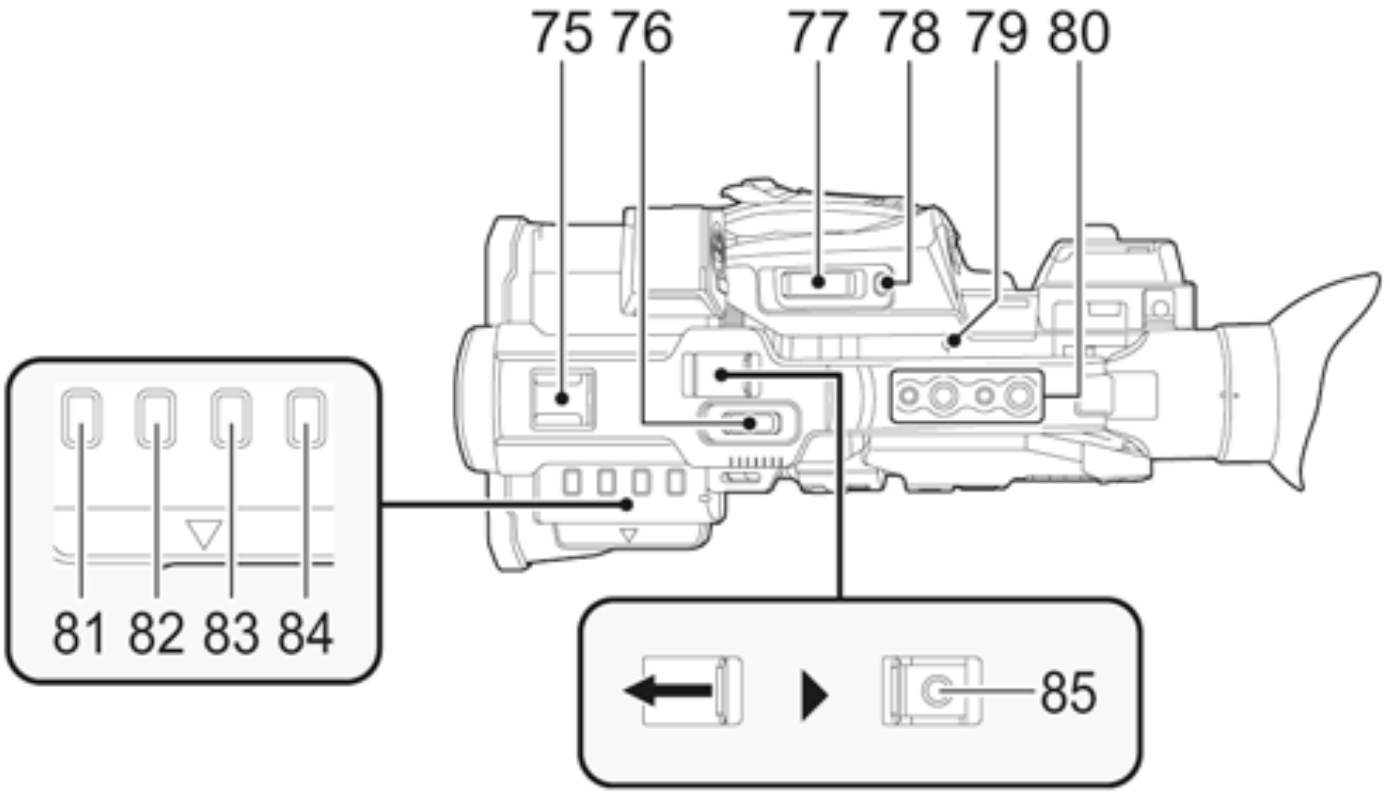

75 Accessory shoe

76 Sub zoom lever (➜ 31)

- This lever functions in the same manner as the zoom lever.
- The zoom speed is controlled with this lever in a way different from the way it is controlled with the zoom lever. (➜ 31)

77 Zoom lever [T/W] (In Recording Mode) (➜ 31)
Volume lever [+VOL−]/Thumbnail display switch [🔍/▦] (In Playback Mode)

78 User 8 button [REC CHECK] (➜ 34)

79 Focal plane index [ϕ]

- Indicates the focal plane of the MOS sensor.

80 Handle mounting hole

(Size of the mounting hole)
– 1/4-20UNC×2
– 3/8-16UNC×2

81 Thumbnail button [THUMBNAIL] (➜ 25)

82 Counter button [COUNTER]

83 Counter reset button [RESET]

84 Color Bar Screen button [BARS]

85 Sub recording start/stop button

- This button functions in the same manner as the recording start/stop button.

6 Service Mode

Indication method of the service menu

1. Set the Power switch to ON, and turn to ON.
2. While pressing the “MENU”button to “FOCUS ASSIST”button and “Zoom lever” (or “Sub zoom lever”) to W side for more than 3 seconds until the top screen of the Service Mode Menu being displayed.

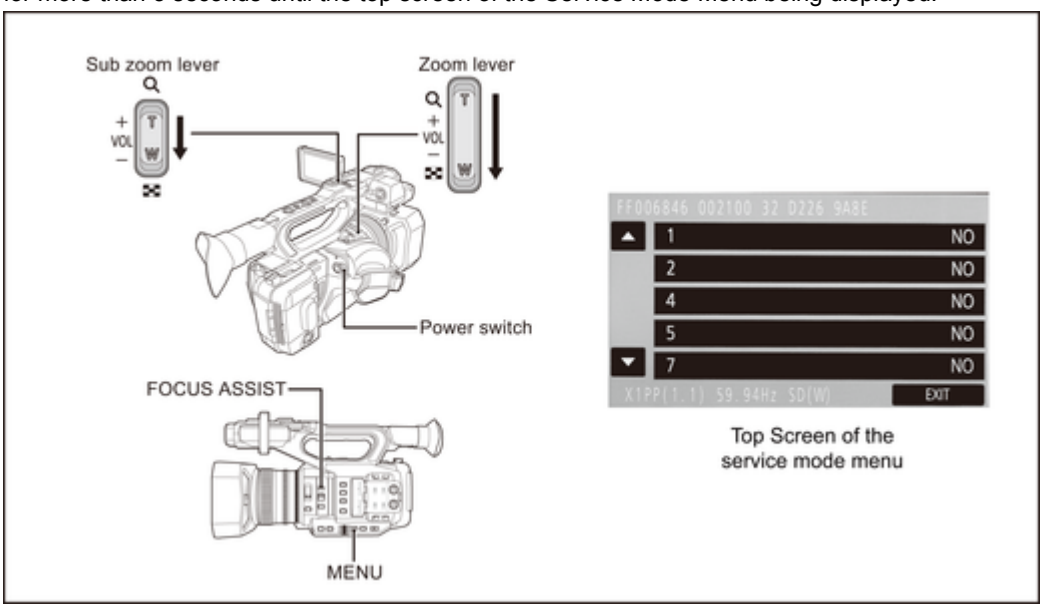

Service mode menu

Screen display	Contents	Function
1	Factory Settings	Function to throw a product up in a factory shipment state.
2	Model/Destination Settings	Change the model/destination. (Selectable models and destinations are displayed.)
4	Lock Search and Error History Indication	Display the camera system error code for three histories saved in EEPROM.
5	Power ON Self Check Result Display	Power ON self check (function to diagnose correct function of the device and interface between devices) result display.
8	Install the Wide Angle of View Adjustment data	When replacing a new Camera Lens Unit or Main P.C.B. or IC3404, install the adjustment data to Main P.C.B. from SD card that the data download from TSN site.
14	Adjutment function for the Service	The service adjustment do setup and adjustment of the following items required in the field service.
15	Restore the backed up adjustment data	Restore the adjustment data to new or repaired Main P.C.B. from SD card that the data backed up from original Main P.C.B. before repairs or replacement.
16	Touch panel calibration	Calibrate the touch positions of the touch panel.

NOTE:
Do not using service mode except above table of Service mode menu.

3. End method of the top screen of the service mode menu
   Touch the [EXIT] of LCD to end the service mode, and then POWER OFF.

6.1 Model/Destination Settings

Touch the [2] of LCD, select model/destination settings.

Operation specifications

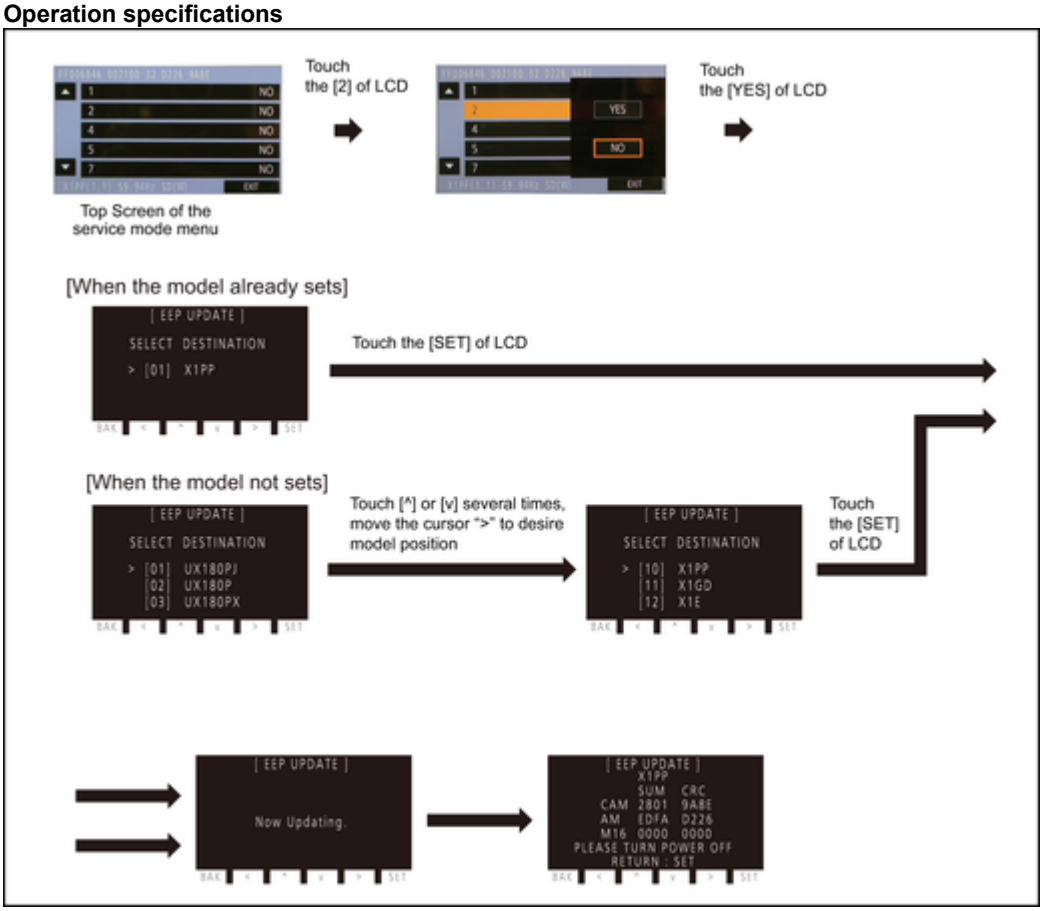

Function description

- Change the Model/Destination
  Display the lists of model/distination which the unit can be changed, if a shipment setup is finished.
  Therefore in some cases, the model/destination that is currently set is only displayed.

End method of operation

- Touch the [SET] of LCD to exit the model/destination settings, and then POWER OFF.

6.2 Lock Search and Error History Indication

Touch the [4] of LCD, select lock search and error history indication.

Operation specifications

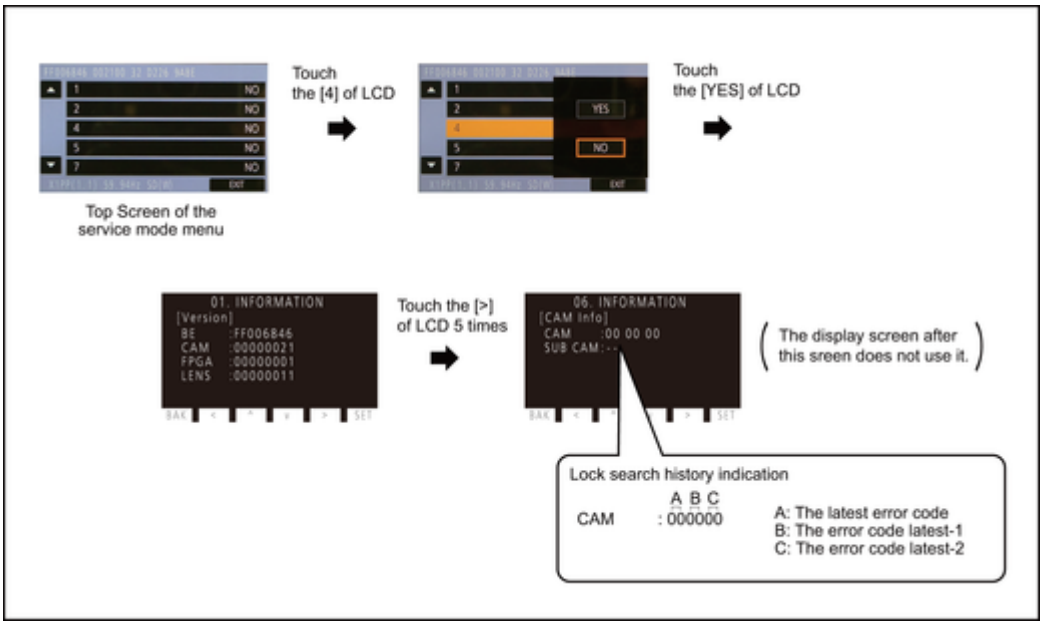

Indication contents

- Lock search history indication of camera
  Display the camera system error code for three histories saved in EEPROM.
- The error code contents which are displayed

Error code	Description	Problematic Parts
51	Focus control is abnormal	Camera Lens Unit
52	Zoom control is abnormal	Zoom Motor/Camera Lens Unit
53	OIS lens control is abnormal	Camera Lens Unit
56	Communication from lens is abnormal	Camera Lens Unit
72	Fan is abnormal	Fan Motor

End method of operation

- Touch the [BAK] of LCD to exit the lock search and error history indication, and then POWER OFF.

6.3 Power ON Self Check Result Display

Touch the [5] of LCD, select Power ON self check result display.

Operation specifications

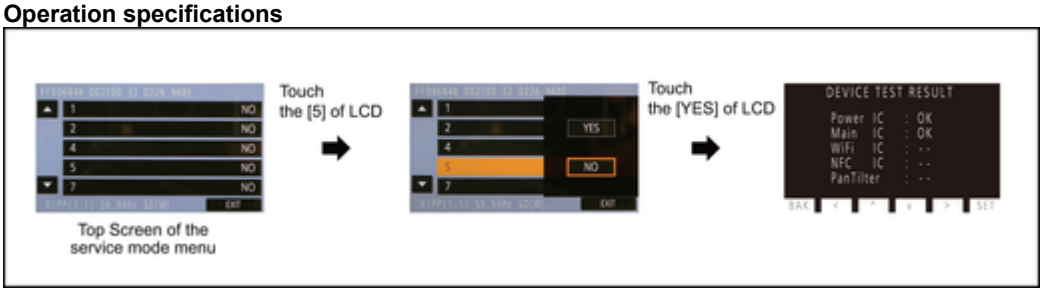

Indication contents

- Power ON self check result display
  Function to diagnose correct function of the device and interface between devices result display.
  Display the following communication test result.
  - Power IC : Communication test between IC3401 and IC2303

- Main IC : DDR. Communication test inside IC3401

Display other than “OK” are abnomalities of each lines.

End method of operation

- Touch the [BAK] of LCD to exit the power on self check result display, and the POWER OFF.

6.4 Install the Wide Angle of View Adjustment data

Touch the [8] of LCD, select installing the wide angle of View adjustment data from SD card to the unit.
Refer to 7 service Fixture & Tools for detailed adjustment method.

6.5 Adjustment function for the Service

Touch the [14] of LCD, select the adjustment function for the service.

Operation Specifications (until before the start of the adjustment)

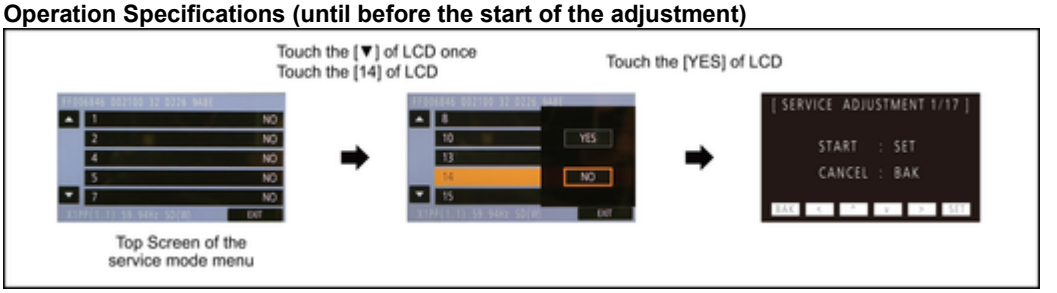

Function description
The service adjustment do setup and adjustment of the following items required in the field service.
For a detailed content, such as the adjustment procedure, refer to “9 Measurements and Adjustments”.

1. Model setting
2. Filename setting for backup to SD card
3. Backing up adjustment data to SD card
4. Checking switches
5. Zoom Lever adjustment
6. Camera adjustment
7. Zoom/Tracking adjustment
8. Finite Focus adjustment
9. Indoor White Balance adjustment (3100K)
10. Outdoor White Balance adjustment (5100K)
11. Black Blemish Compensation
12. Lenz Vignetting Correction
13. Level Shot adjustment
14. Internal Clock 27MHz adjustment
15. Eye Sensor adjustment

End method of operation

- Set the power switch to OFF to turn the unit off.

6.6 Restore the backed up adjustment data

Touch the [15] of LCD, select restoring the backed up adjustment data from SD card to the unit.

Operation Specifications

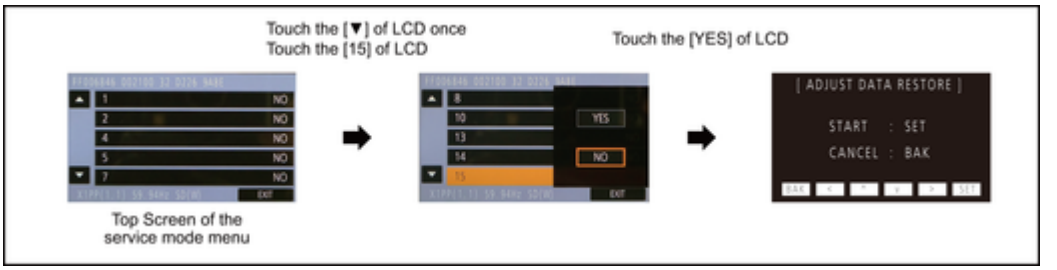

Function description

Restore the adjustment data to new or repaired Main P.C.B. from SD card that the data backed up from original Main P.C.B. before repairs or replacement.

To backup the adjustment data, use “6.4. Adjustment function for the Service”.

Restoring procedure

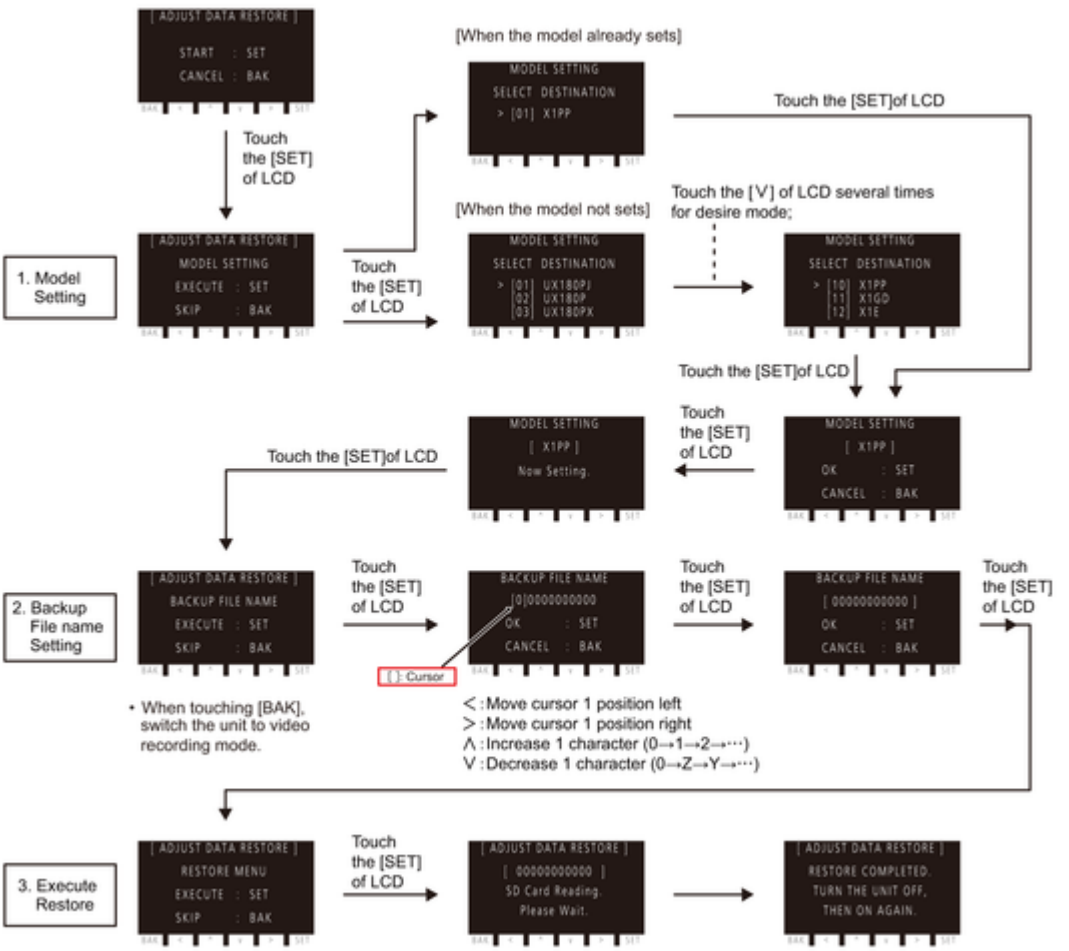

End method of operation

- Set the power switch to OFF to turn the unit off.

6.7 Touch Panel Calibration

Touch the [16] of LCD, select the calibration of touch panel.

Operation Specifications

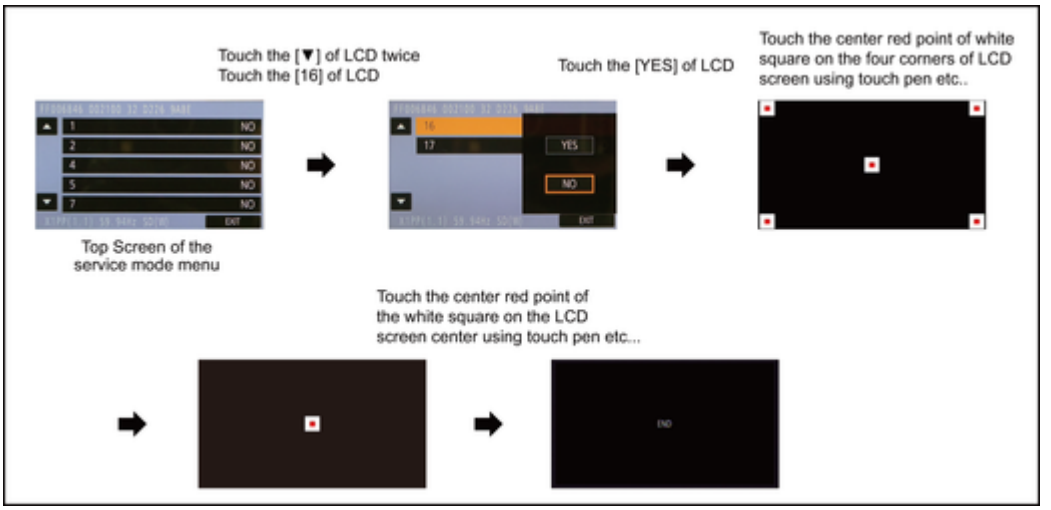

Function description
Calibrate the touch positions of the touch panel.

End method of operation

- Set the power switch to OFF to turn the unit off.

7 Service Fixture & Tools

7.1 When Replacing the Camera Lens Unit or Main P.C.B. or IC3404(Flash Rom)

After replacing the Camera Lens Unit or Main P.C.B. or IC3404(Flash Rom), be sure to achieve Wide Angle of View adjustment.
The Wide Angle of View adjustment data is available on "Support Information from INBD-AVC" web-site in "TSN system".
Please follow the procedure below for installation.

7.1.1 Confirm the Serial Number (Camera Lens Unit, Video Camera)

[Replacement of the Camera Lens Unit]
Confirm the Serial Number of the replacement Camera Lens Unit (Fig-1).

[Replacement of the Main P.C.B. or IC3404(Flash Rom)]
Confirm the Serial Number of the Video Camera and the current Camera Lens Unit on your Video Camera (Fig-1).
Fig-1. Location of the Camera Lens Unit Serial Number

7.1.2 Download the Wide Angle of View Adjustment data

Please download the Wide Angle of View Adjustment data from "Support Information from INBD-AVC" web-site in "TSN system".

[Replacement of the Camera Lens Unit]

- Select "LENS.zip" and decompress it (Fig-2 ①).
- Download folder's data (MOVIE.ee) matching the serial number of the Camera Lens Unit.

[Replacement of the Main P.C.B. or IC3404(Flash Rom)]

- Select zip file whose head number matches the first 4 charactors of the Video Camera and decompress it (Fig-2 ②)
- Download data matching the serial number and folder name of the Video Camera and Camera Lens Unit
  * If the Camera Lens Unit serial number does not match, it is a Video Camera that was replaced in the past. Therefore, do it with the serial number of the Camera Lens Unit.

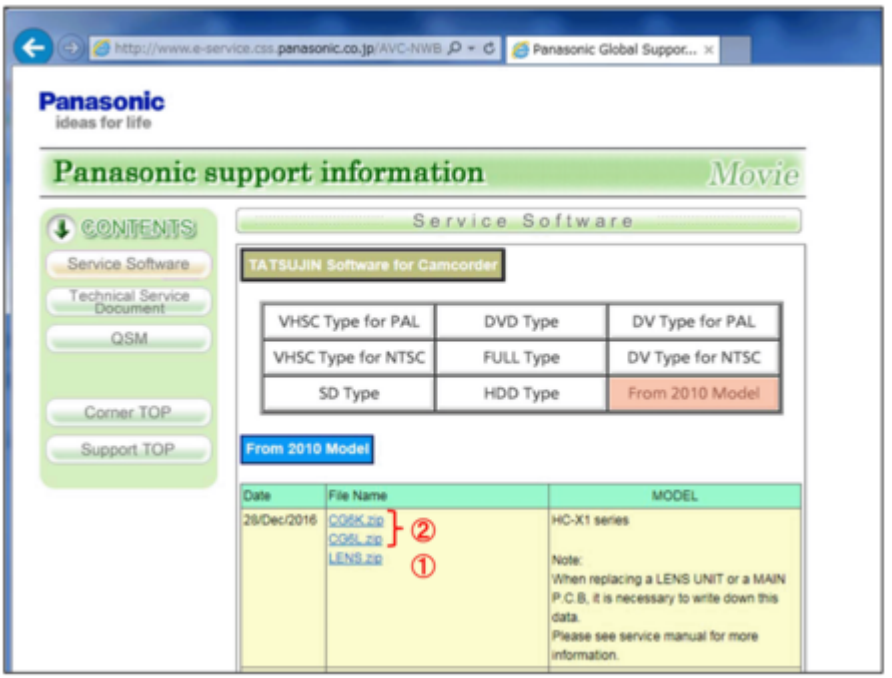

Fig-2

7.1.3 Installation Procedure

1. Copy the MOVIE.ee file (approx. 300KByte) to the root folder (directly below) of an SD card. (Fig-3)

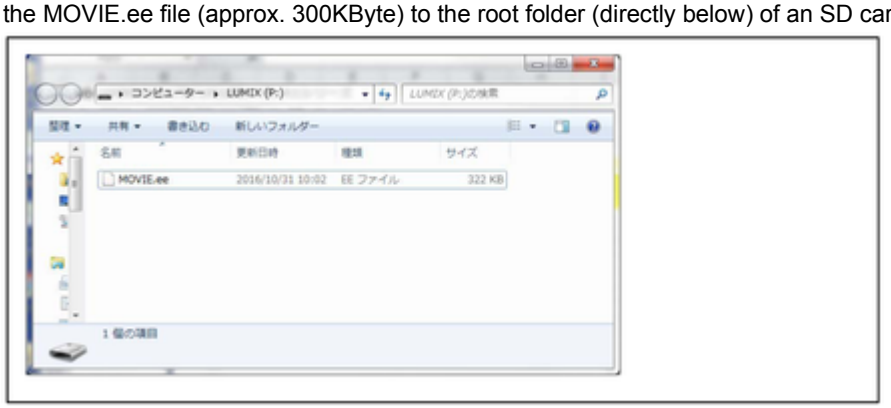

Fig-3

2. Insert the SD card of copied "MOVIE.ee" into the Video Camera.
3. Hold down [ZOOM WIDE SWITCH], [FOCUS ASSIST BUTTON] and [MENU BUTTON] simultaneously so that the service menu appears. (Fig-4)
4. Press the arrow button (▽) on the side of the service menu, and select No. 8 so that “YES” and “NO” appear. Then select [YES]. (Fig-4)

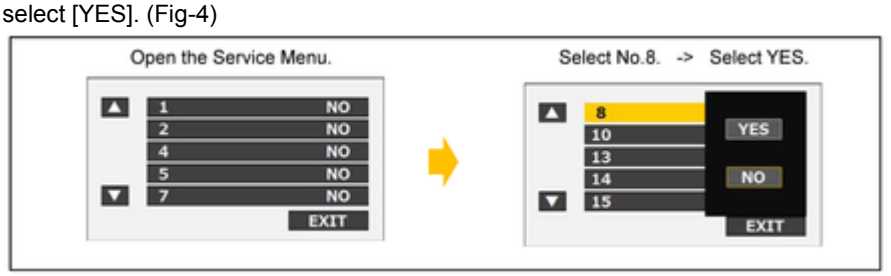

Fig-4

5. After “YES” is selected, the installation of the adjustment data is executed. When [CHECK CARD] is shown on the screen, the installation is completed. (Fig-5)
6. Remove the SD card, turn the power off, and then turn it on again. (Reboot)

When "CHECK CARD" is displayed, the installation is completed.

Fig-5

7.2 Convenient Jig

Parts Name	Parts No.	Remarks
Coating Clip	VJF1535	It is used after removing a rubber cover.

This Jig is used in order to remove a Release Lever from XLR connector, and it raises the workability at the time of Disassembly
and Assembly of the Side Case L Unit.

[Operation Method]

It draws out or equips with a Release Lever after inserting a Jig(VJF1535).
(Refer to the following figure)

7.3 Extension Cable Connection

No extension cable needs for servicing.
Servicing can be performed only with original cables.

8 Disassembly and Assembly Instructions

8.1 Disassembly Flow Chart for the Unit

This is a disassembling chart.
When assembling, perform this chart conversely.

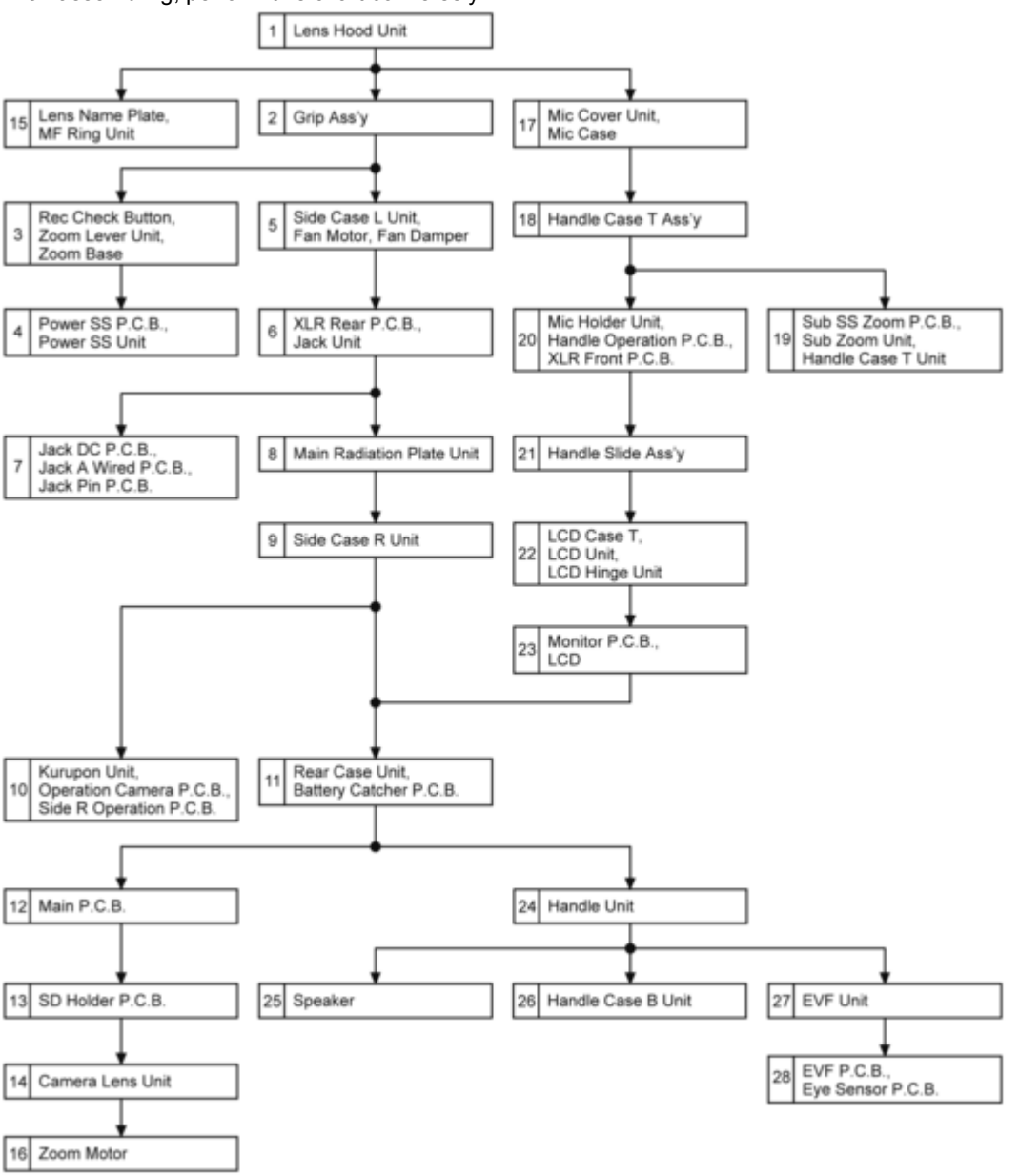

8.2 PCB Location

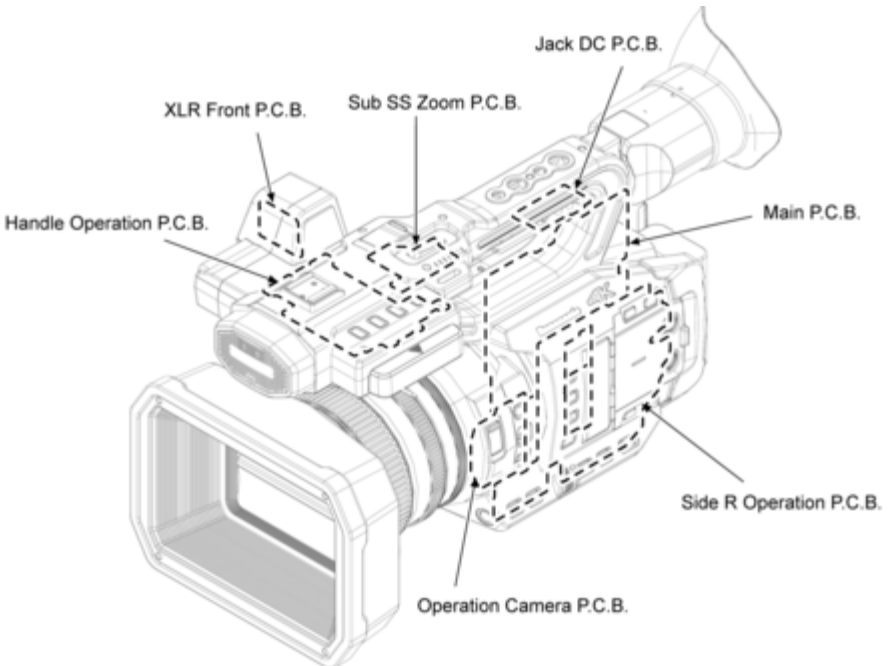

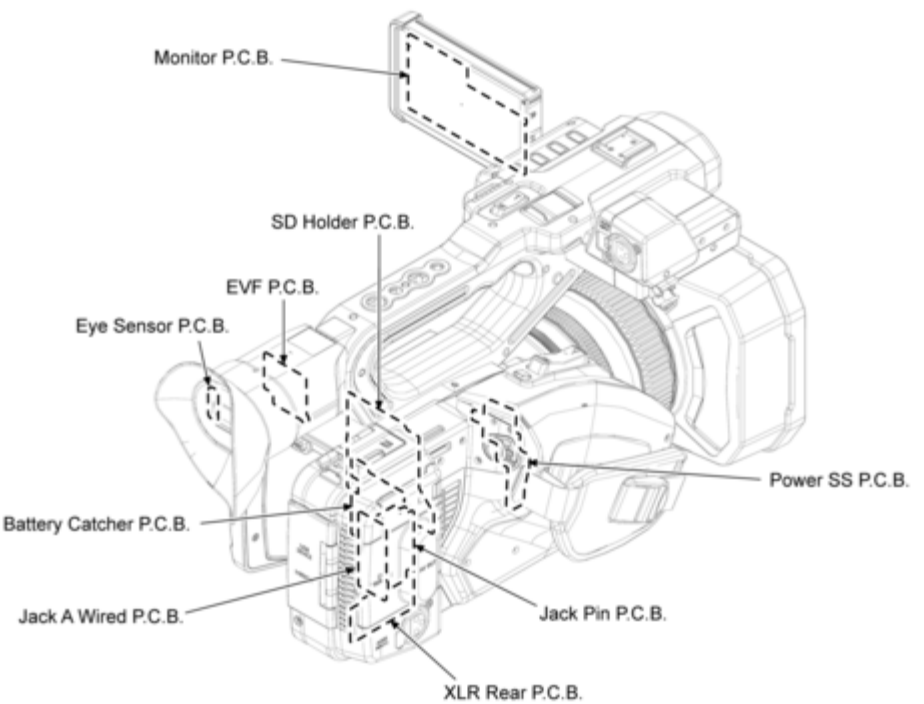

8.3 Disassembly Procedure for the Unit

No.	Item	Fig.	Removal
1	Lens Hood Unit	(Fig. D1)	Lens Hood Unit
		(Fig. D2)	NOTE: (When Installing)
2	Grip Ass'y	(Fig. D3)	Screw (A) × 3
			Screw (B) × 7
		(Fig. D4)	Locking tab × 1
			FP6601 (Flex)
			Grip Ass'y

3	Rec Check Button , Zoom Lever Unit, Zoom Base	(Fig. D5)	Screw (C) × 3
		(Fig. D6)	FP6602 (Flex)
			Convex × 2
			Hooking part × 1
			Screw (D) × 2
			Rec Check Button
			Photo Earth Plate
			Zoom Lever Unit
			Zoom Base
4	Power SS P.C.B., Power SS Unit	(Fig. D7)	Screw (E) × 2
			Convex × 1
			Screw (F) × 3
			Screw (G) × 1
			Convex × 2
			Power SS Earth Plate
			Power SS P.C.B.
			Power Panelight
			Power SS Unit
			Grip Unit
5	Side Case L Unit, Fan Motor, Fan Damper	(Fig. D8)	Release Lever
			Screw (H) × 4
			Screw (I) × 3
			Screw (J) × 2
			Screw (K) × 2
		(Fig. D9)	Screw (L) × 5
			Screw (M) × 1
			Locking tab × 1
			Lens Top Case
			Screw (N) × 1
		(Fig. D10)	Locking tab × 2
			Side Case L Unit
			P6024 (Connector)
			Fan Motor
			Fan Damper
6	XLR Rear P.C.B., Jack Unit	(Fig. D11)	Screw (O) × 2
			XLR Rear Plate
			FP6004 (Flex)
			XLR Rear P.C.B.
			Screw (P) × 1
			Screw (Q) × 1
		(Fig. D12)	P6851 (Connector)
			Screw (R) × 1
			Convex × 1
			FP6022 (Flex)
			Jack Unit
7	Jack DC P.C.B., Jack A Wired P.C.B., Jack Pin P.C.B.	(Fig. D13)	M6 Nut ×1
			Screw (S) × 4
			Dust Piece
			FP6827 (Flex)
			FP6828 (Flex)
			Locking tab × 2
			Hooking part × 2
			Jack DC P.C.B.
			Jack A Wired P.C.B.
		(Fig. D14)	Screw (T) × 2

			Jack Plate
			Screw (U) × 2
			Convex × 2
			Jack Pin P.C.B.
			RCA Piece
8	Main Radiation Plate Unit	(Fig. D15)	Screw (V) × 4
			Convex × 2
			Main Radiation Plate Unit
9	Side Case R Unit	(Fig. D16)	Screw (W) × 1
			Screw (X) × 5
			Screw (Y) × 2
			Screw (Z) × 1
			FP6002 (Flex)
		(Fig. D17)	Locking tab × 2
			Side Case R Unit
10	Kurupon Unit, Operation Camera P.C.B., Side R Operation P.C.B.	(Fig. D18)	FP6952 (Flex)
			Screw (a) × 2
			Convex × 2
			Kurupon Unit
		(Fig. D19)	FP6901 (Flex)
			FP6953 (Flex)
			Screw (b) × 1 0
			Convex × 6
			Hooking part × 2
			Operation Camera P.C.B.
			Side R Operation P.C.B.
		(Fig. D20)	NOTE:(When Installing)
11	Rear Case Unit, Battery Catcher P.C.B.	(Fig. D21)	Screw (c) × 5
			Screw (d) × 1
		(Fig. D22)	P6022 (Connector)
			FP6011 (Flex)
			Locking tab × 1
			Rear Case Unit
			P6301 (Connector)
			Locking tab × 2
			Convex × 2
			Hooking part × 1
			Battery Catcher P.C.B.
12	Main P.C.B.	(Fig. D23)	FP301 (Flex)
			FP302 (Flex)
			FP6006 (Flex)
			FP6008 (Flex)
			FP6009 (Flex)
			FP6010 (Flex)
			PS6003 (Connector)
			PS6004 (Connector)
			Screw (e) × 2
			PP6001 (Connector)
			PP3901 (Connector)
			Main P.C.B.
13	SD Holder P.C.B.	(Fig. D24)	Screw (f) × 2
			Convex × 2
			SD Holder P.C.B.
14	Camera Lens Unit	(Fig. D25)	Screw (g) × 3
			Screw (h) × 4

			Convex × 2
			Lens Frame Unit
			Camera Lens Unit
15	Lens Name Plate , MF Ring Unit	(Fig. D26)	Screw (i) × 2
			Lens Name Plate
			Screw (j) × 3
			MF Ring Unit
16	Zoom Motor	(Fig. D27)	Screw (k) × 2
			Solder (2 points)
			Convex × 2
			Projection part × 1
			Zoom Motor
17	Mic Cover Unit, Mic Case	(Fig. D28)	Screw (l) × 1
			Locking tab × 3
			Hooking part × 1
			Mic Cover Unit
			Screw (m) × 2
			Mic Case
18	Handle Case T Ass'y	(Fig. D29)	Screw (n) × 9
			Screw (o) × 2
			FP6716 (Flex)
			Handle Case T Ass'y
19	Sub SS Zoom P.C.B., Sub Zoom Unit, Handle Case T Unit	(Fig. D30)	Screw (p) × 3
			Shoe Angle
			Sub SS Zoom FFC
			Screw (q) × 3
			HA Top Angle
			Convex × 4
			Sub SS Zoom P.C.B.
			Sub Zoom Unit
			REC Button
			Handle Case T Unit
20	Mic Holder Unit, Handle Operation P.C.B., XLR Front P.C.B.	(Fig. D31)	Screw (r) × 2
			FP6710 (Flex)
			Hooking part × 2
			Mic Holder Unit
			Screw (s) × 3
			FP6708 (Flex)
			FP6712 (Flex)
			FP6713 (Flex)
			P6710 (Connector)
			Hooking part × 1
		(Fig. D32)	PS6719 (Connector)
			FP6714 (Flex)
			Handle Operation P.C.B.
			Screw (t) × 1
			Release Lever
			Screw (u) × 2
			XLR Front P.C.B.
		(Fig. D33)	NOTE: (Wiring Treatment)
21	Handle Slide Ass'y	(Fig. D34)	Screw (v) × 2
			Locking tab × 3
			Handle Slide Ass'y
22	LCD Case T, LCD Unit,	(Fig. D35)	Screw (w) × 4
			Handle Slide Unit

	LCD Hinge Unit		Screw (x) × 1
		(Fig. D36)	Screw (y) × 1
			Screw (z) × 2
			Locking tab × 6
			FP901 (Flex)
			FP902 (Flex)
			LCD Case T
		(Fig. D37)	LCD Unit
			LCD Hinge Unit
23	Monitor P.C.B., LCD	(Fig. D38)	FP904 (Flex)
			FP905 (Flex)
			Convex × 3
		(Fig. D39)	Hooking part × 2
			Locking tab × 2
			Convex × 2
			Monitor P.C.B.
			Hooking part × 4
			LGP Unit
			LCD
			TP Spacer
			LCD Case B Unit
24	Handle Unit	(Fig. D40)	Screw (A') × 6
			Handle Unit
25	Speaker	(Fig. D41)	Screw (B') × 2
			Convex × 2
			Speaker Angle
			Speaker
26	Handle Case B Unit	(Fig. D42)	Handle Case B Unit
27	EVF Unit	(Fig. D43)	Screw (C') × 1
			Handle Case Rear
			Screw (D') × 4
			Locking tab × 2
			Handle Case L
		(Fig. D44)	Screw (E') × 2
			EVF Unit
28	EVF P.C.B., Eye Sensor P.C.B.	(Fig. D45)	Screw (F') × 4
		(Fig. D46)	EVF Case T
			EVF Case B
			EVF Shaft Unit
			PS801 (Flex)
			EVF Slim Wire
			Screw (G') × 2
			Convex × 2
			EVF Piece Unit
			EVF Panel
		(Fig. D47)	Screw (H') × 2
			Convex × 3
			ES Earth Plate
			Screw (I') × 2
			FP857 (Flex)
			FP802 (Flex)
			FP803 (Flex)
			Locking tab × 2
			Convex × 4
			EVF P.C.B.

			EVF P.C.B. Cushion
			Eye Sensor P.C.B.

NOTE:
- When servicing and reassembling, remove the card and battery from the unit.
  - Card
  - Battery Pack

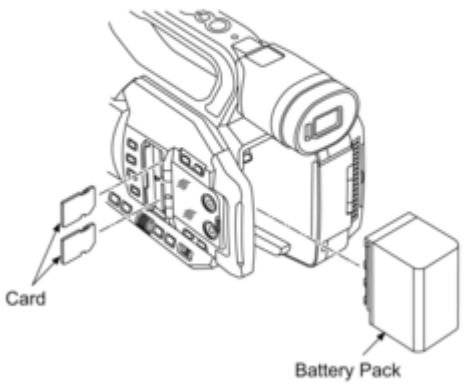

8.3.1 Removal of the Lens Hood Unit

- While pressing the Lens Hood Release button, rotate in direction of the arrow (1) and pull in direction of the arrow (2) then remove the Lens Hood Unit.

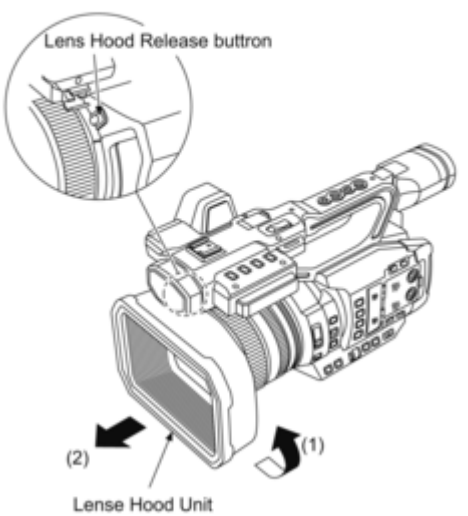

(Fig. D1)

NOTE: (When Installing)
- When installing the Lens Hood Unit, align both mark of Lens Hood Unit and body, then insert the Lens Hood Unit.

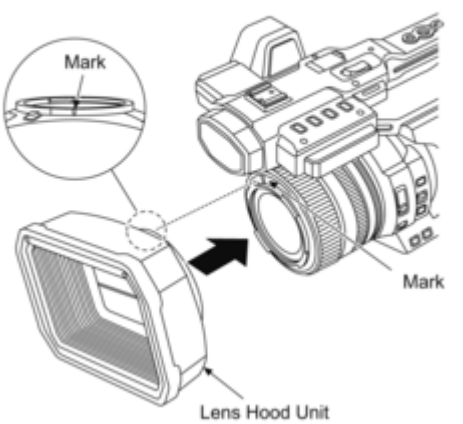

(Fig. D2)

8.3.2 Removal of the Grip Ass'y

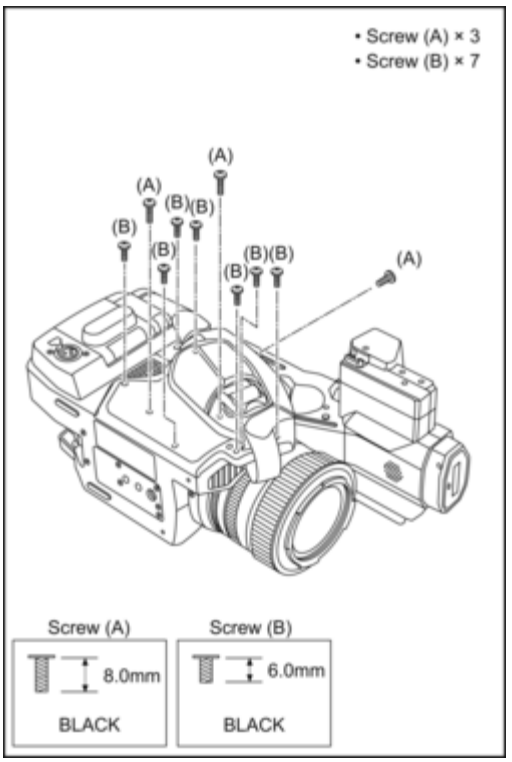

(Fig. D3)

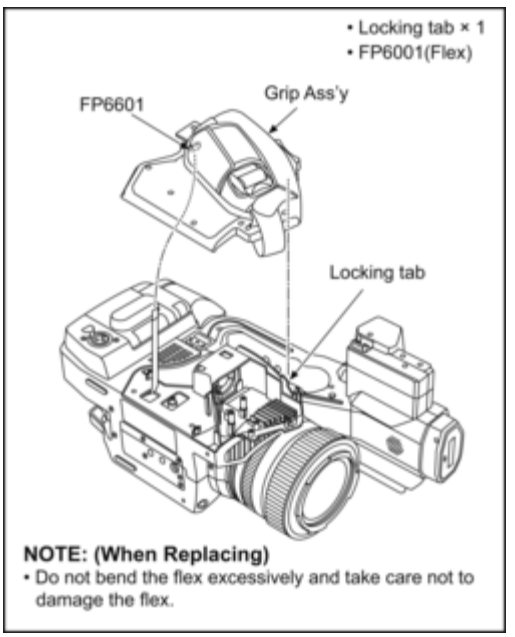

(Fig. D4)

8.3.3 Removal of the Rec Check Button, Zoom Lever Unit, Zoom Base

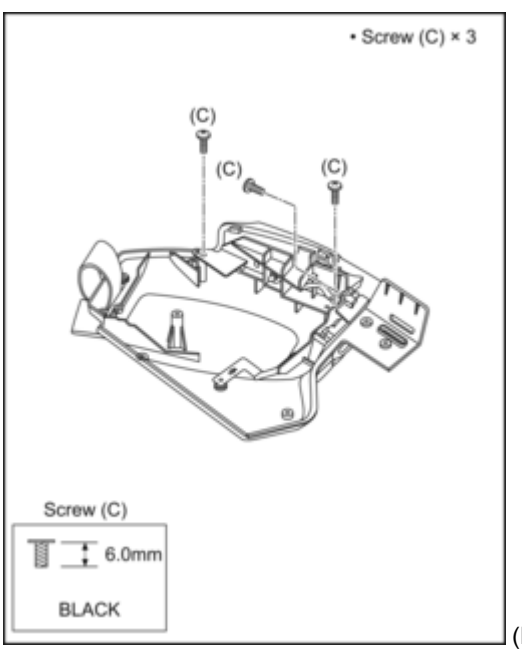

(Fig. D5)

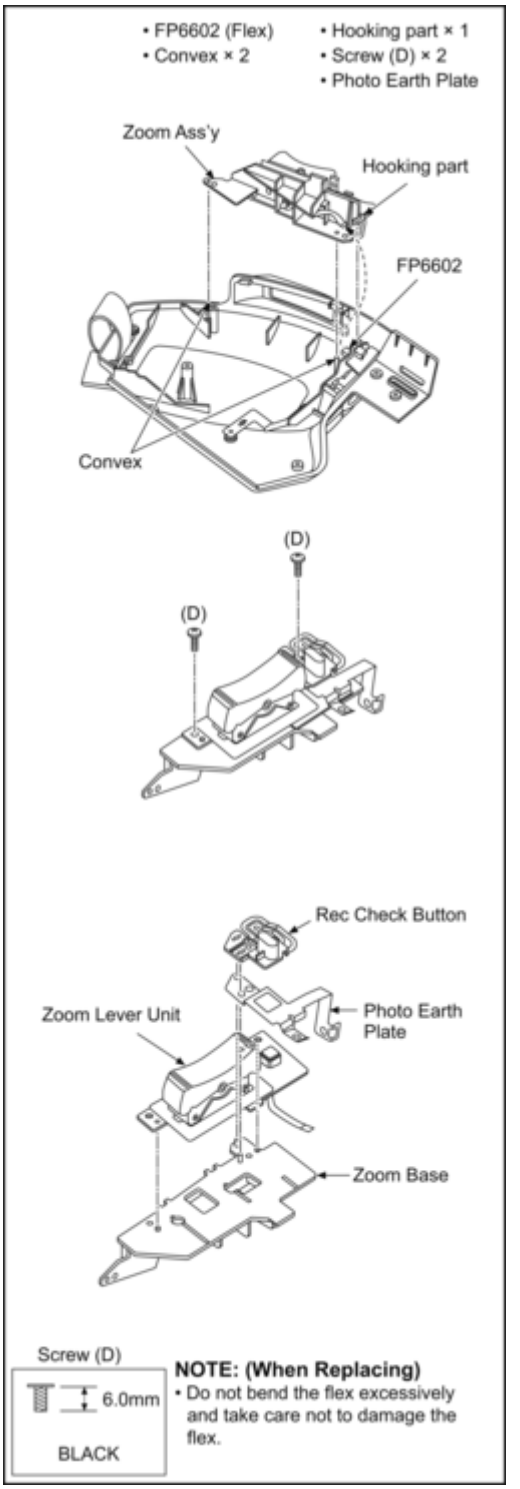

(Fig. D6)

8.3.4 Removal of the Power SS P.C.B., Power SS Unit

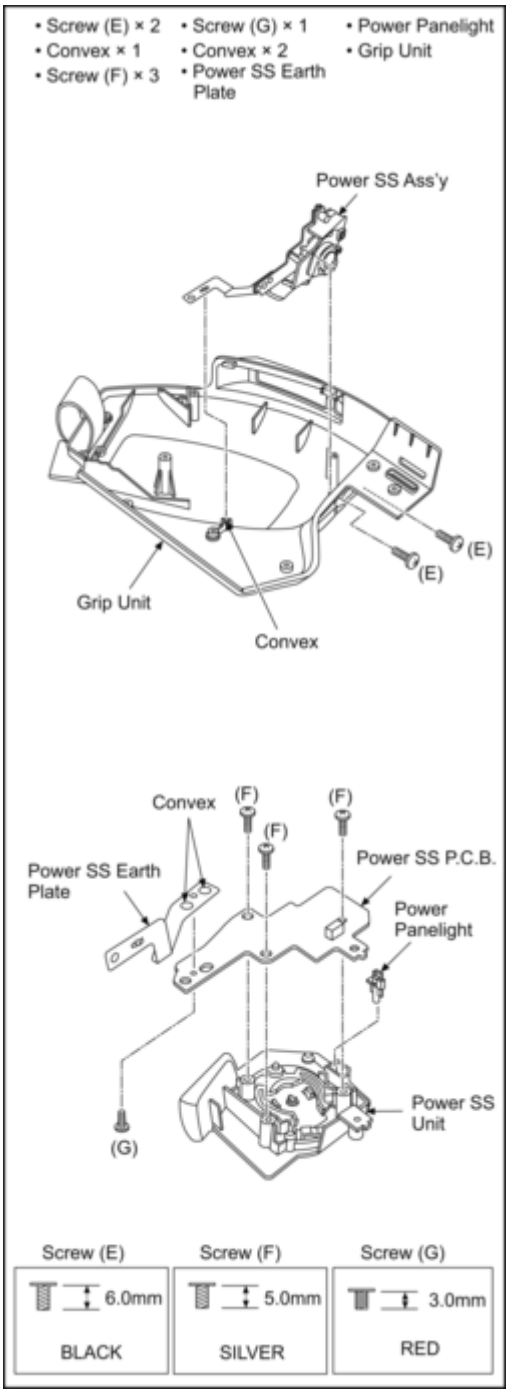

(Fig. D7)

8.3.5 Removal of the Side Case L Unit, Fan Motor, Fan Damper

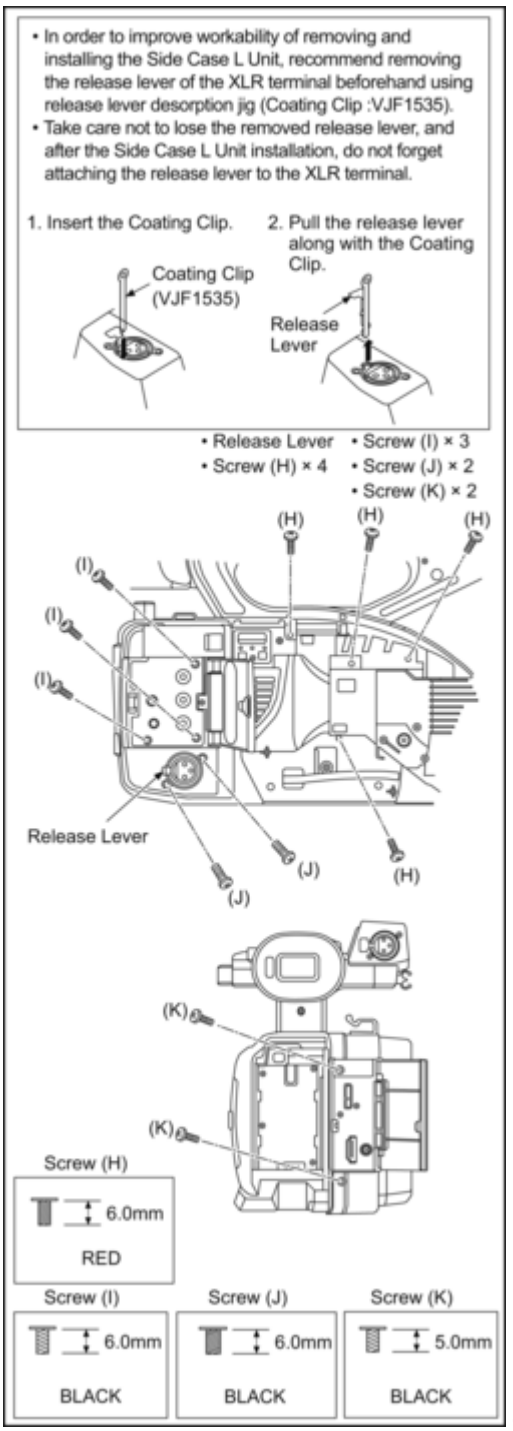

(Fig. D8)

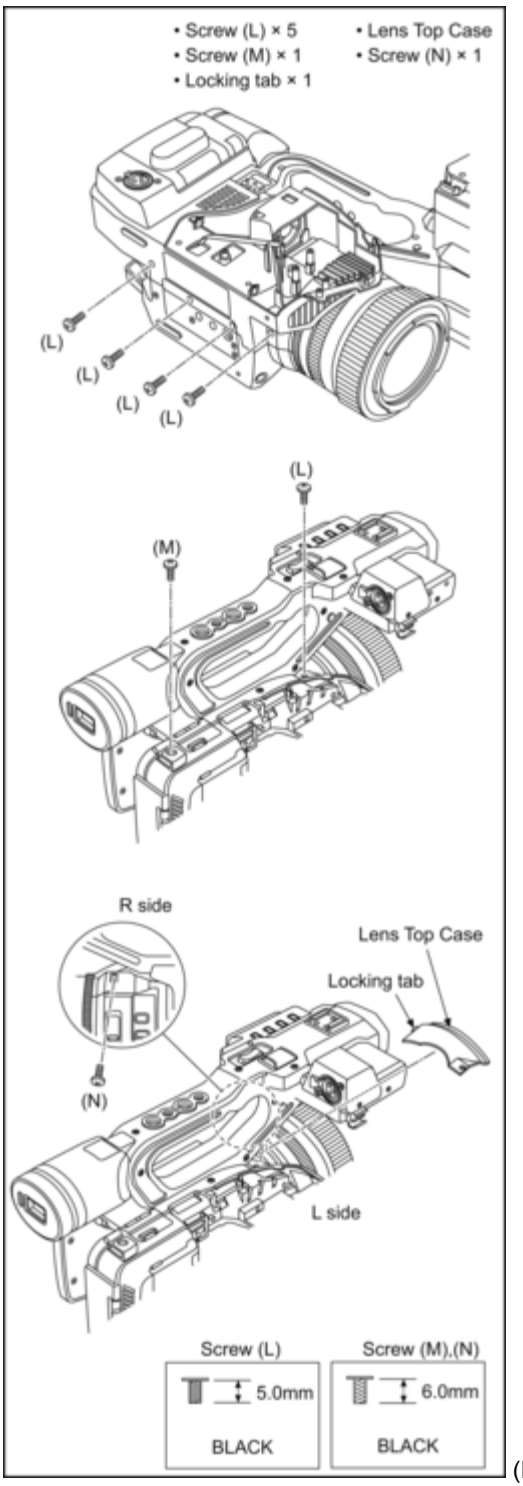

(Fig. D9)

(Fig.

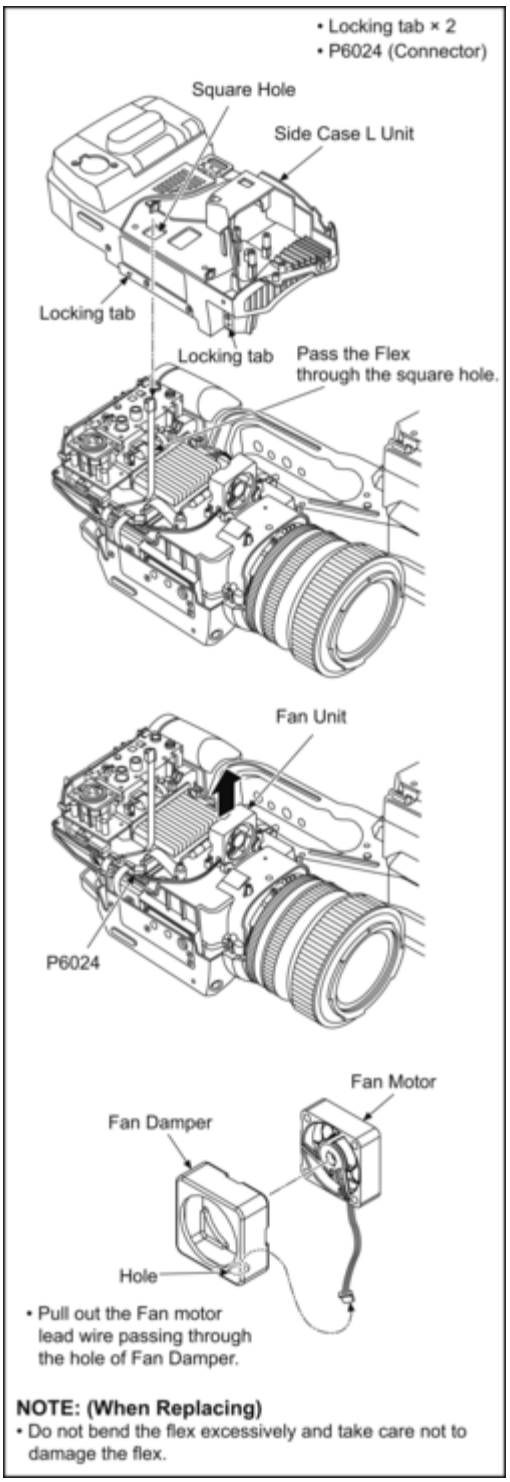

D10)

8.3.6 Removal of the XLR Rear P.C.B., Jack Unit

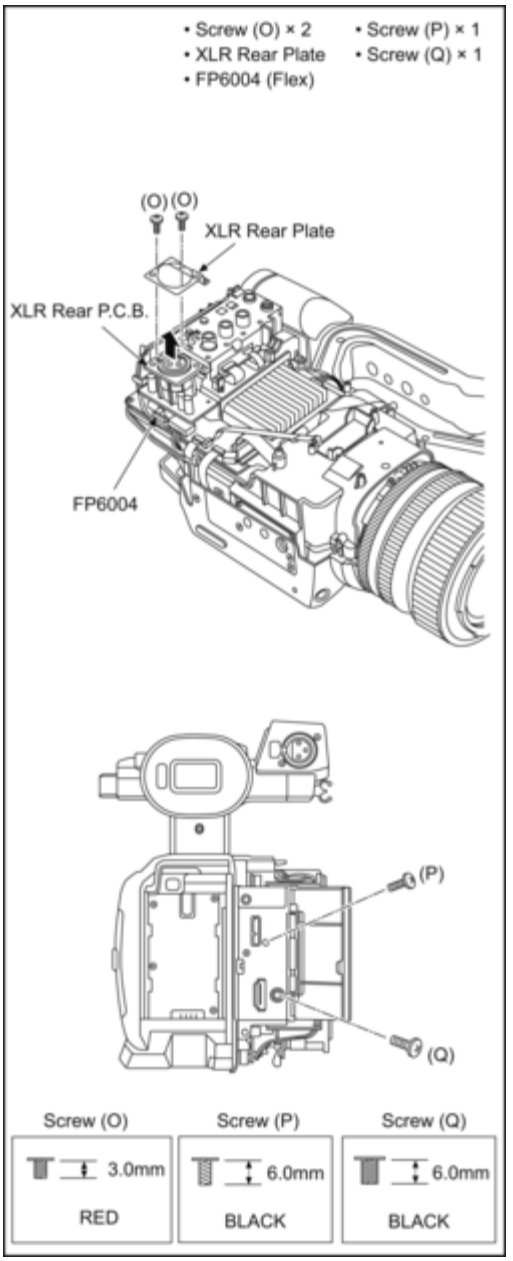

(Fig. D11)

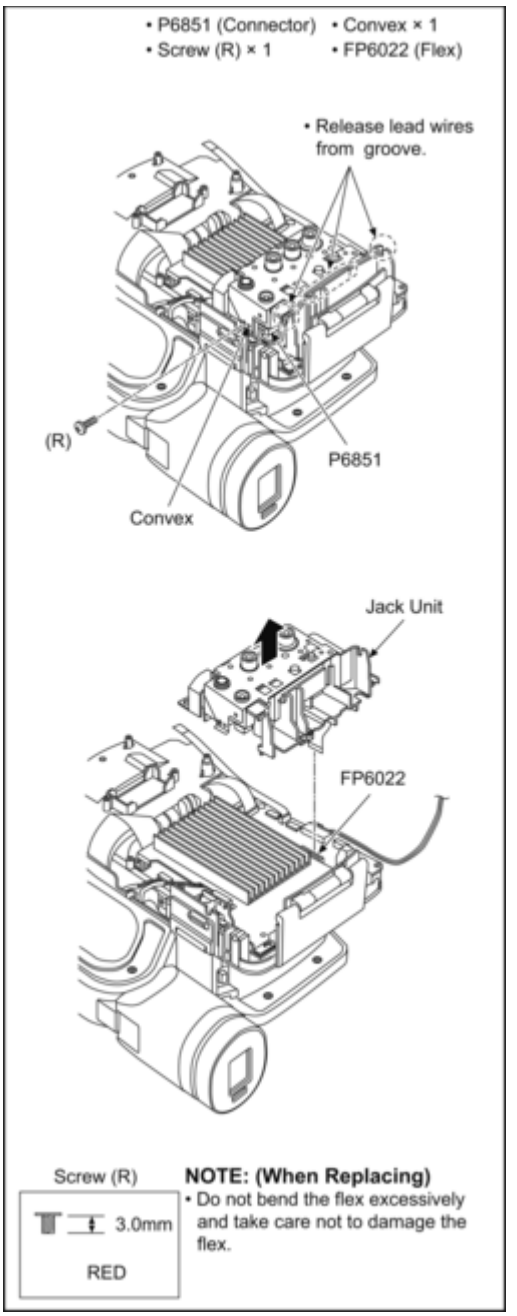

(Fig. D12)

8.3.7 Removal of the Jack DC P.C.B., Jack A Wired P.C.B., Jack Pin P.C.B.

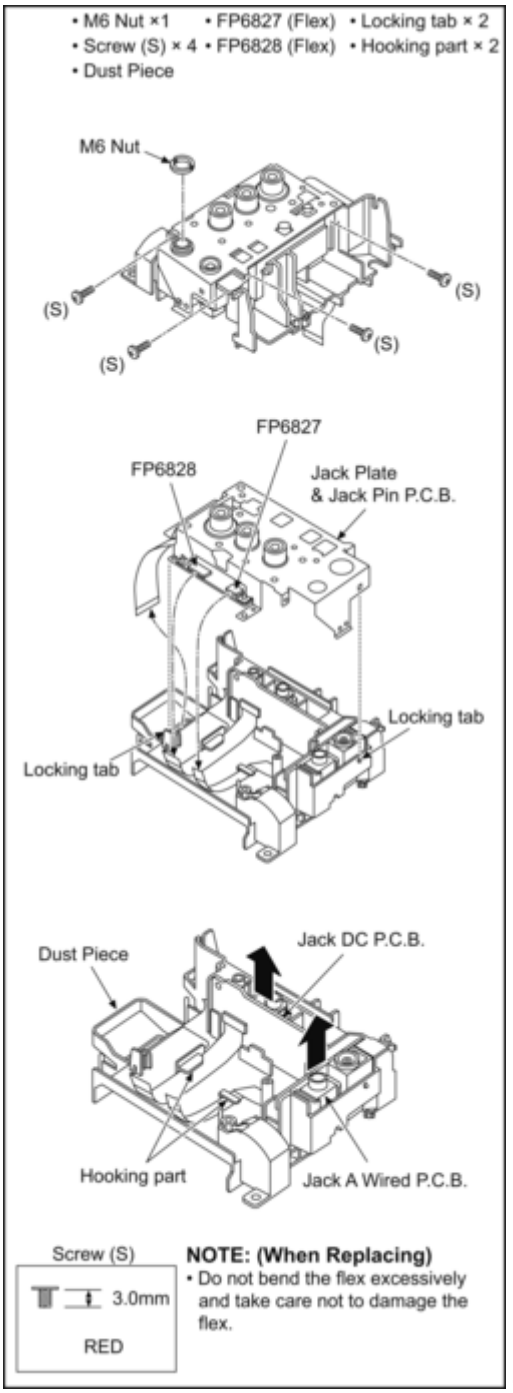

(Fig. D13)

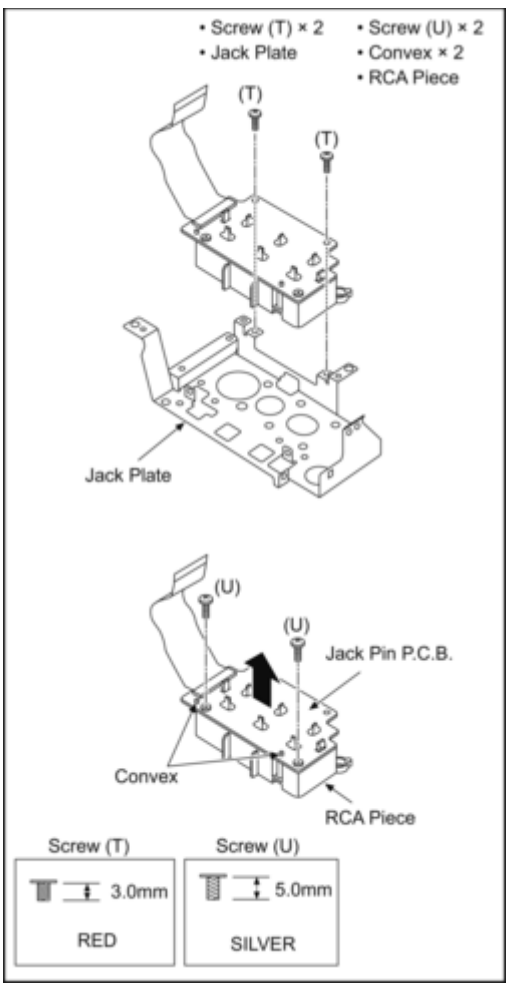

(Fig. D14)

8.3.8 Removal of the Main Radiation Plate Unit

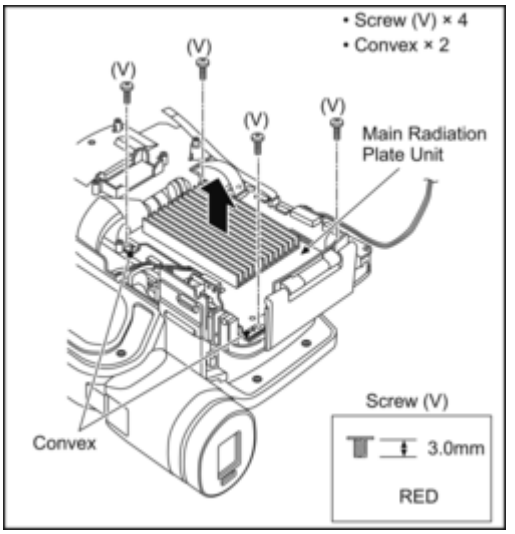

(Fig. D15)

8.3.9 Removal of the Side Case R Unit

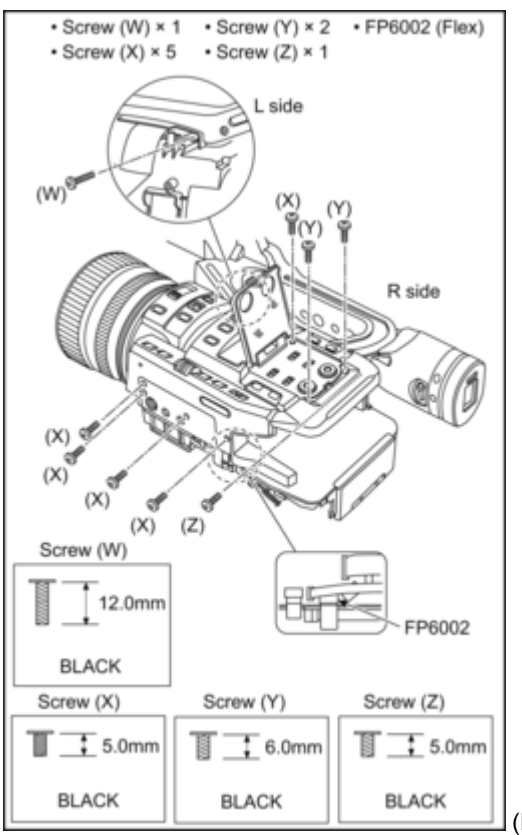

(Fig. D16)

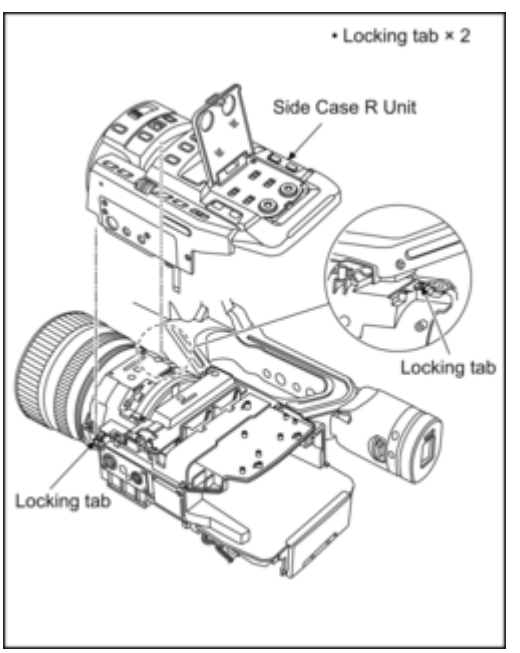

(Fig. D17)

8.3.10 Removal of the Kurupon Unit, Operation Camera P.C.B., Side R Operation P.C.B.

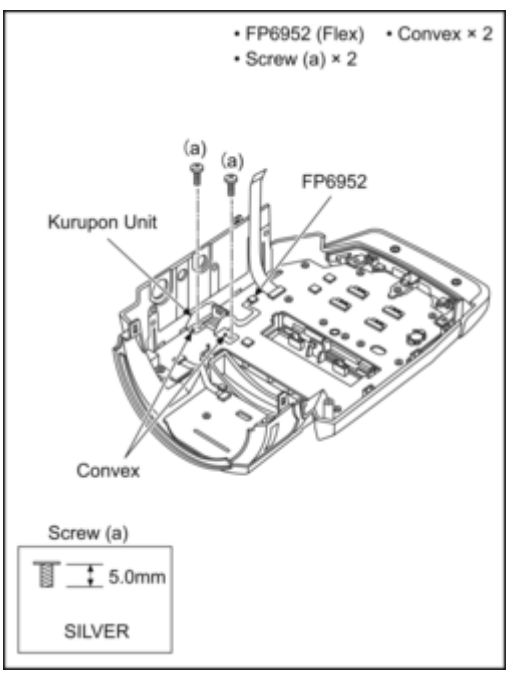

(Fig. D18)

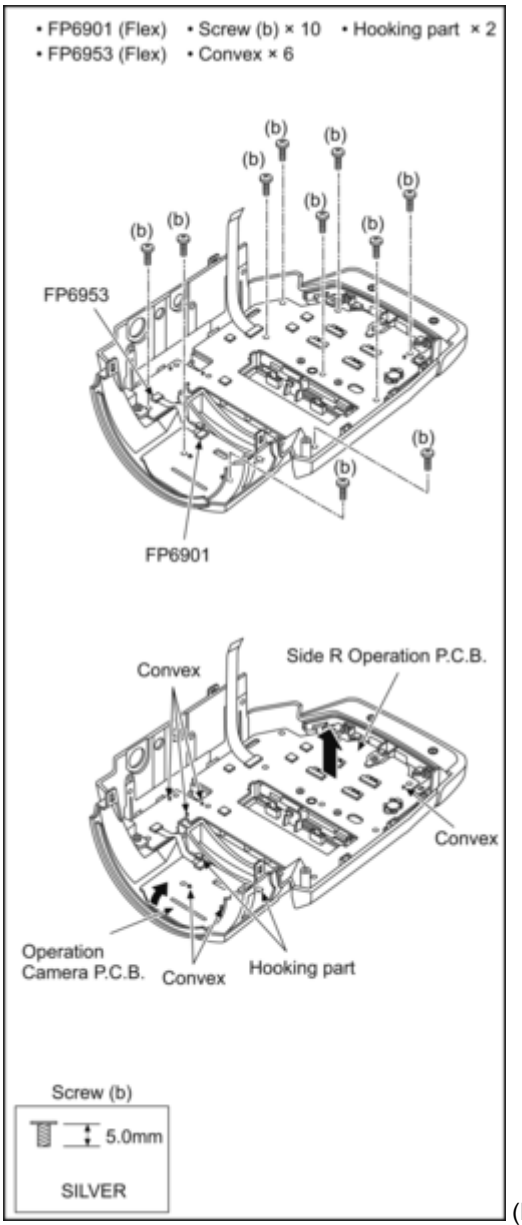

(Fig. D19)

(Fig.

D20)

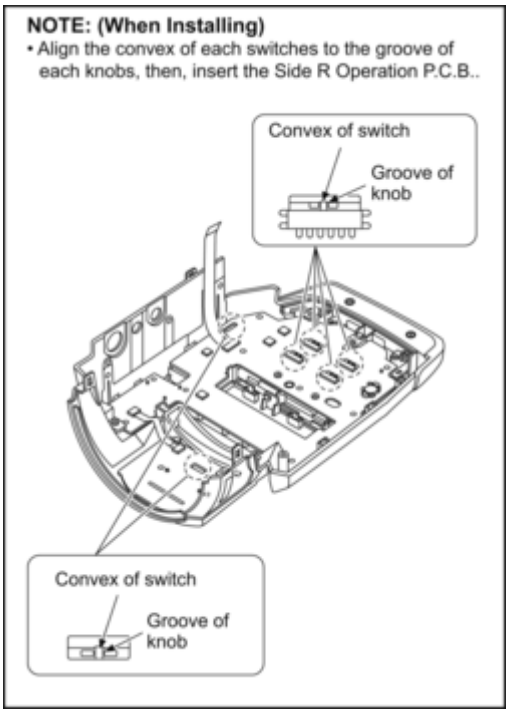

8.3.11 Removal of the Rear Case Unit, Battery Catcher P.C.B.

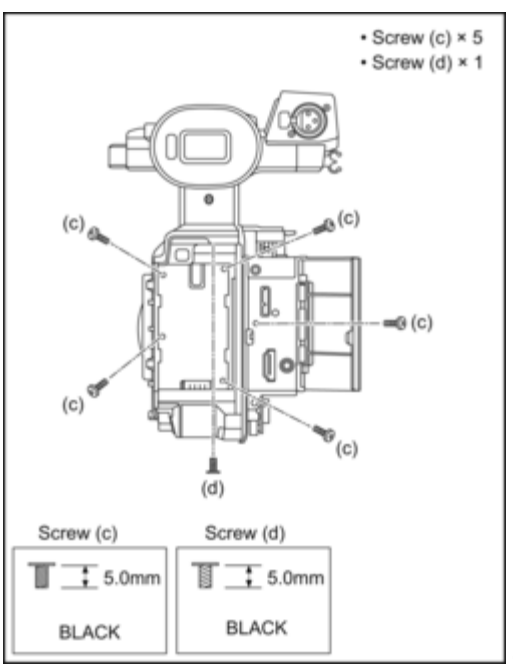

(Fig. D21)

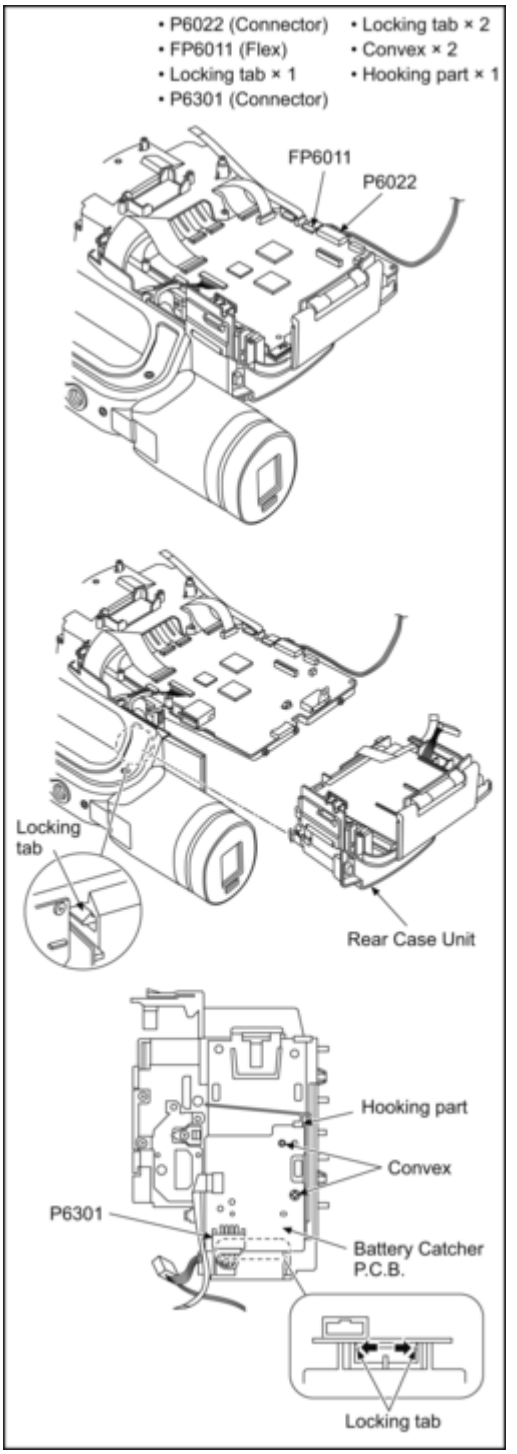

(Fig. D22)

8.3.12 Removal of the Main P.C.B.

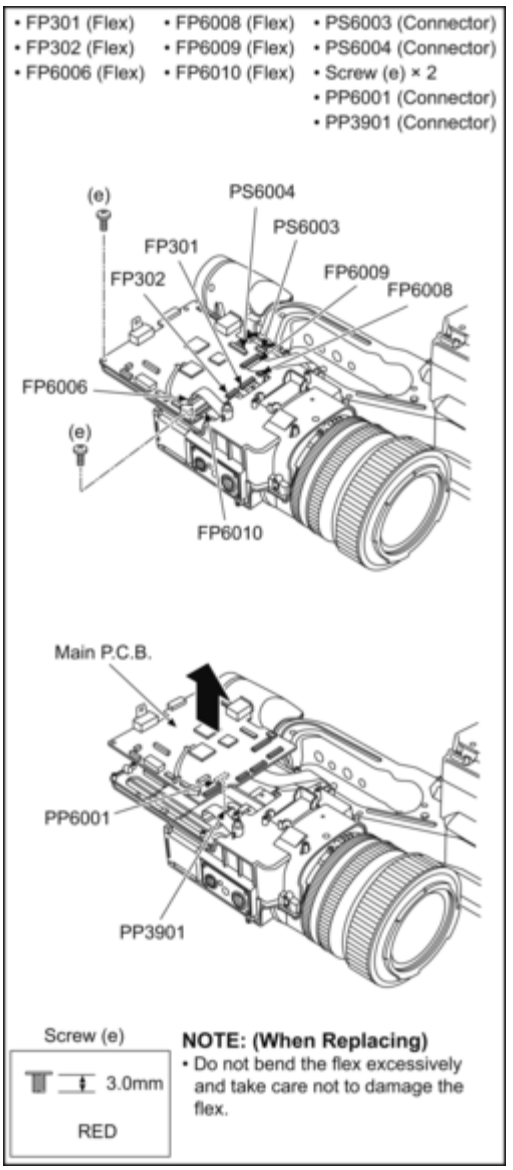

(Fig. D23)

8.3.13 Removal of the SD Holder P.C.B.

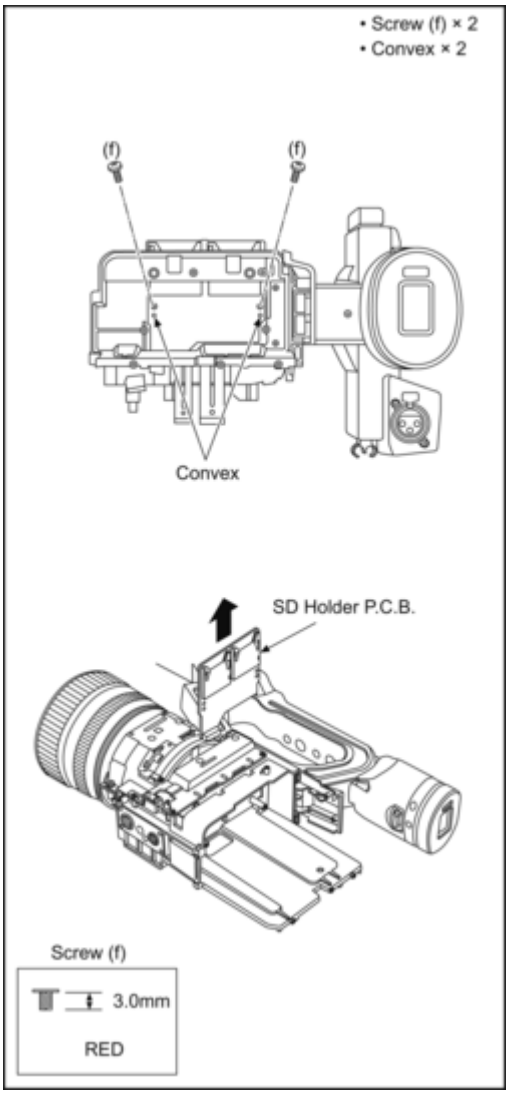

(Fig. D24)

8.3.14 Removal of the Camera Lens Unit

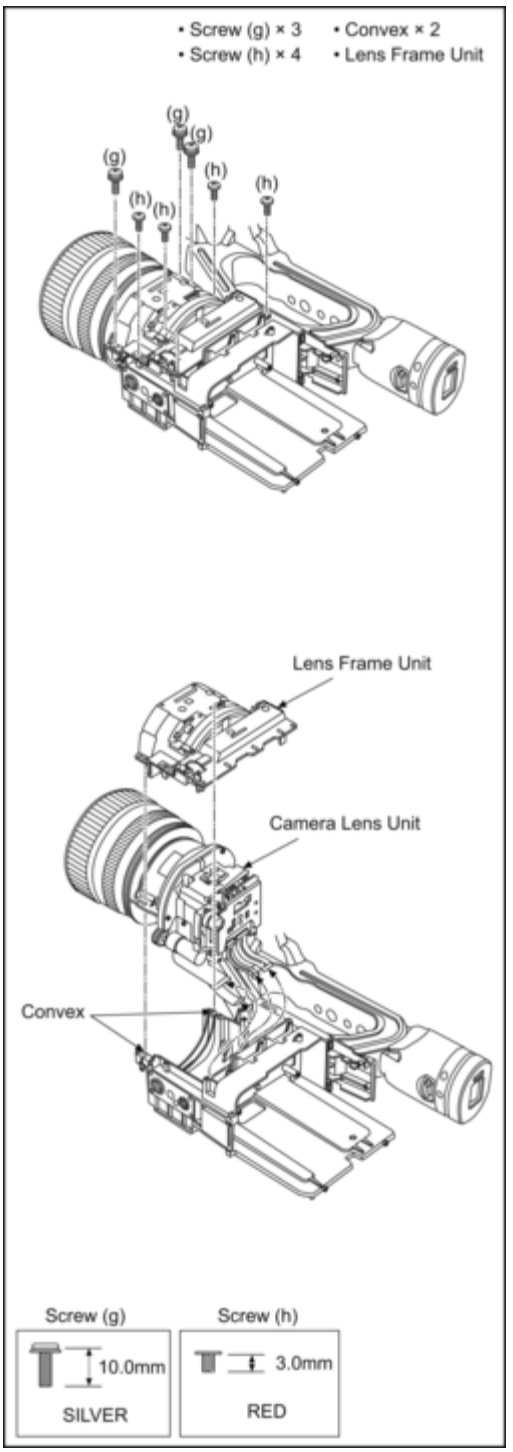

(Fig. D25)

8.3.15 Removal of the Lens Name Plate, MF Ring Unit

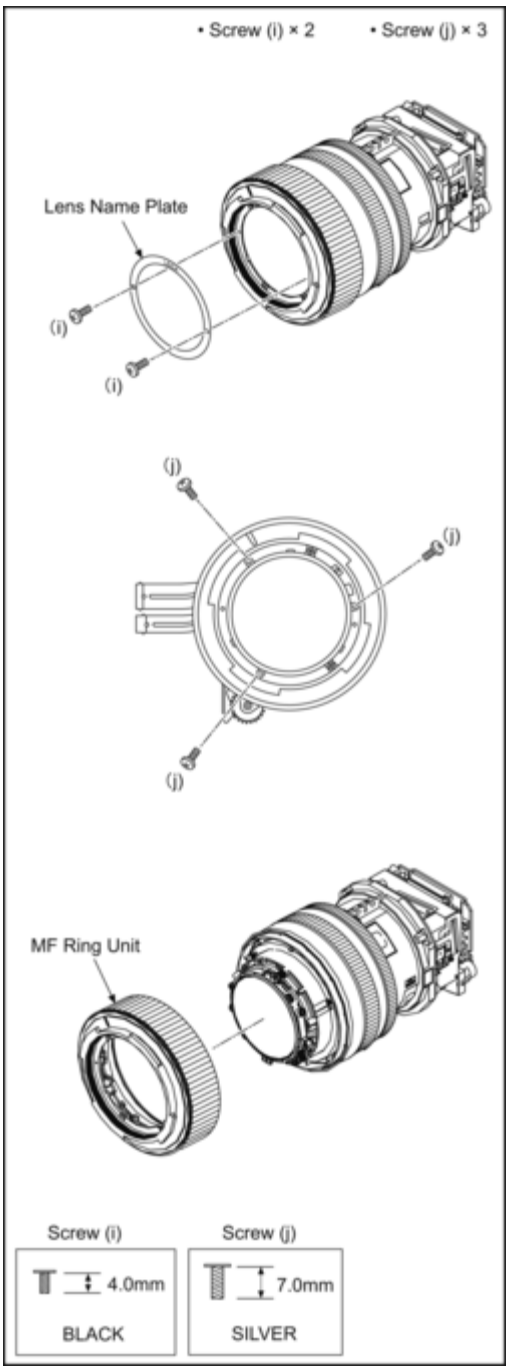

(Fig. D26)

8.3.16 Removal of the Zoom Motor

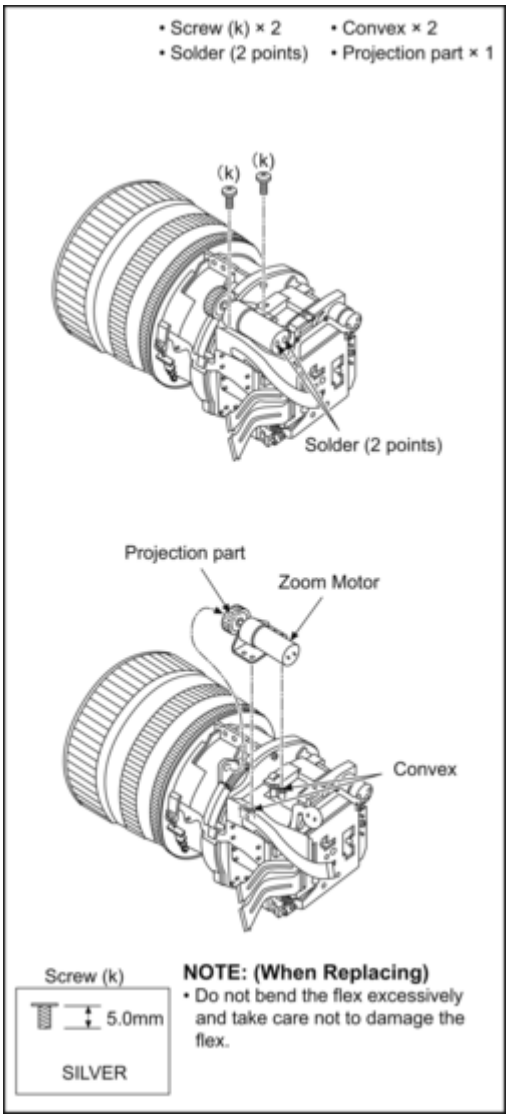

(Fig. D27)

8.3.17 Removal of the Mic Cover Unit, Mic Case

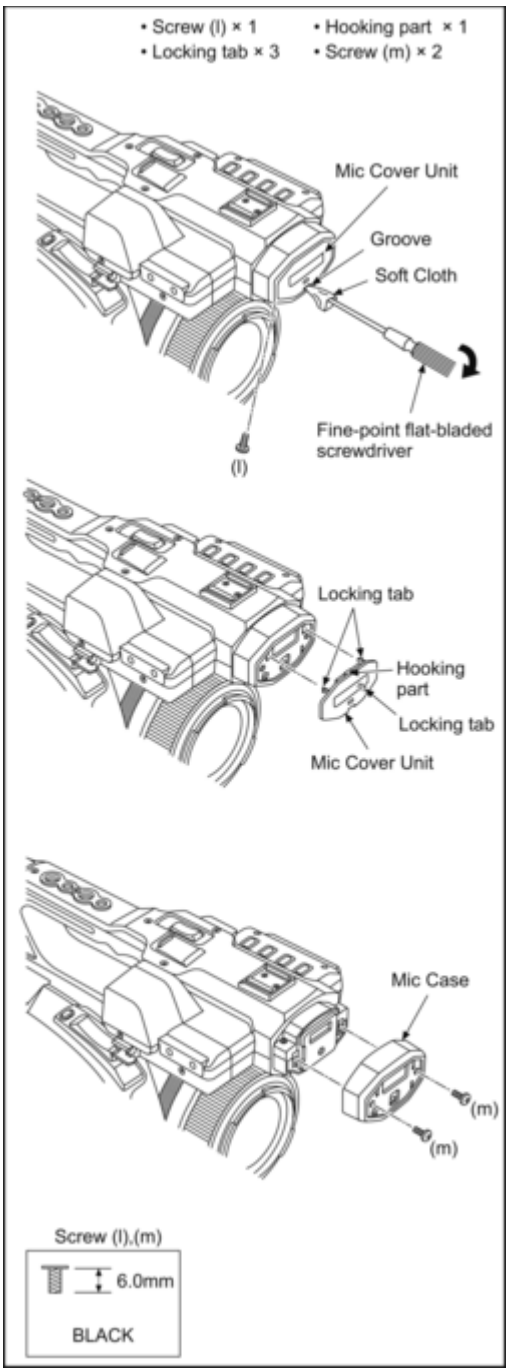

(Fig. D28)

8.3.18 Removal of the Handle Case T Ass'y

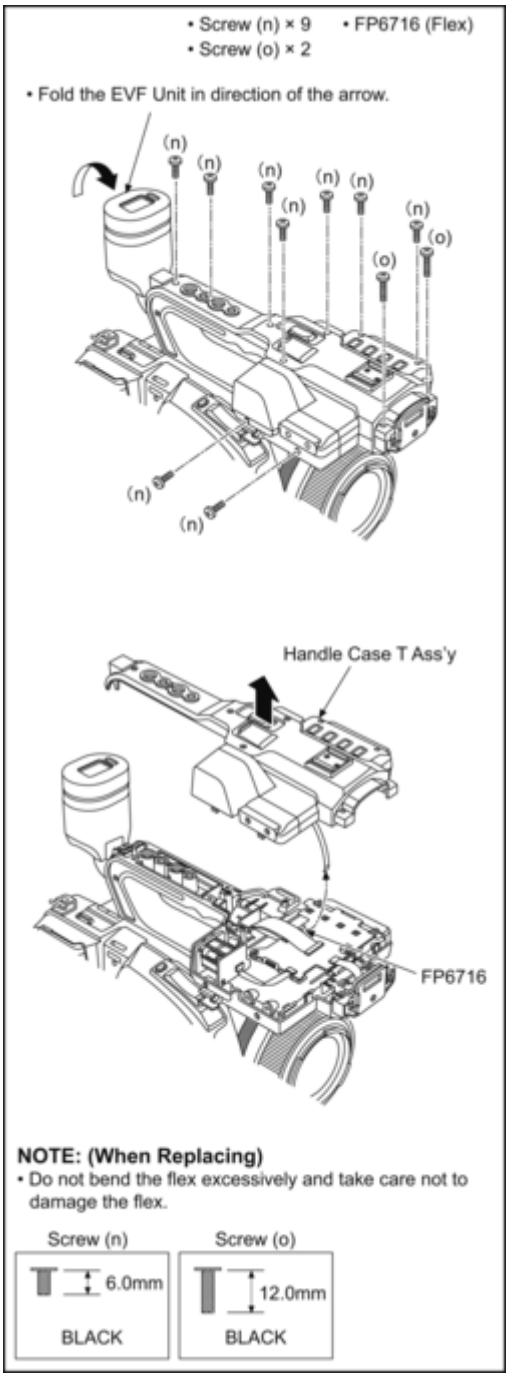

(Fig. D29)

8.3.19 Removal of the Sub SS Zoom P.C.B., Sub Zoom Unit, Handle Case T Unit

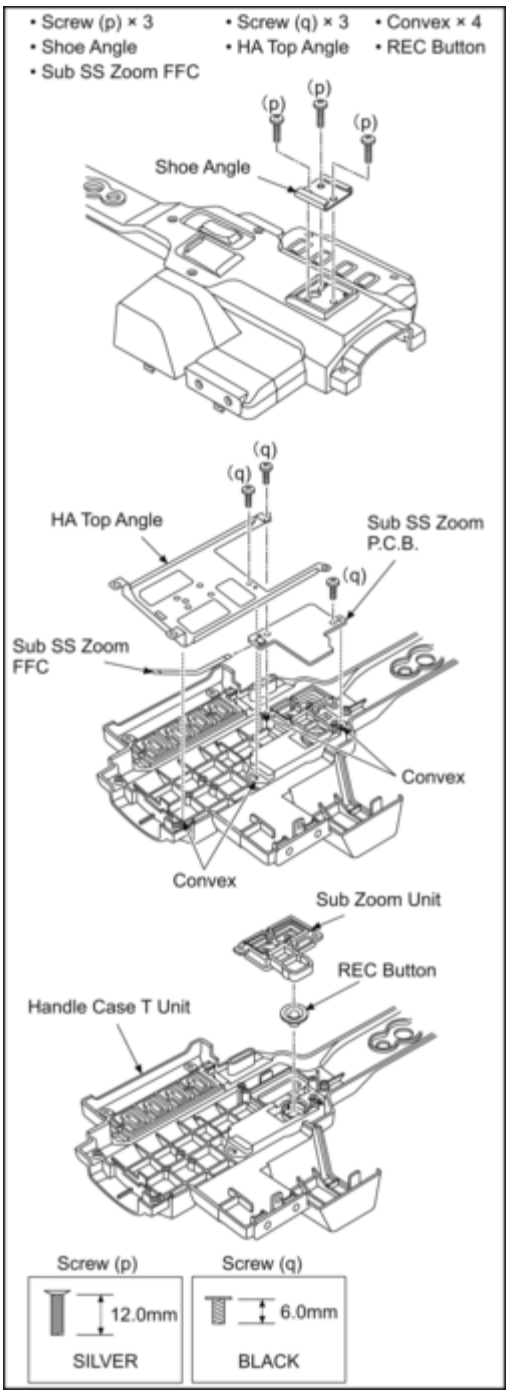

(Fig. D30)

8.3.20 Removal of the Mic Holder Unit, Handle Operation P.C.B., XLR Front P.C.B.

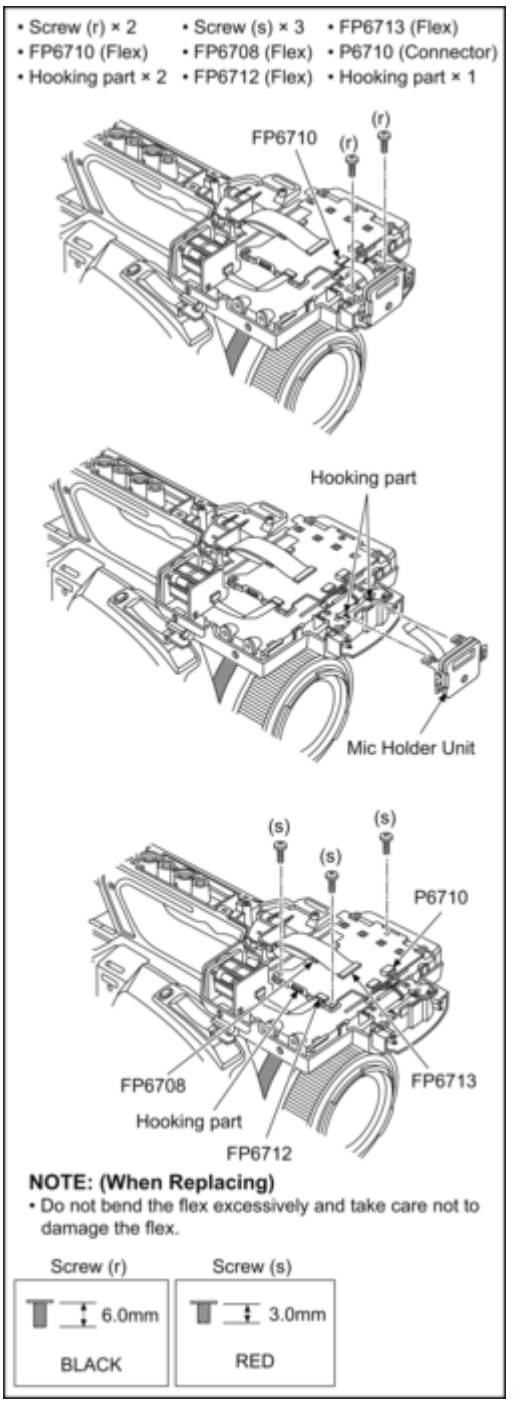

(Fig. D31)

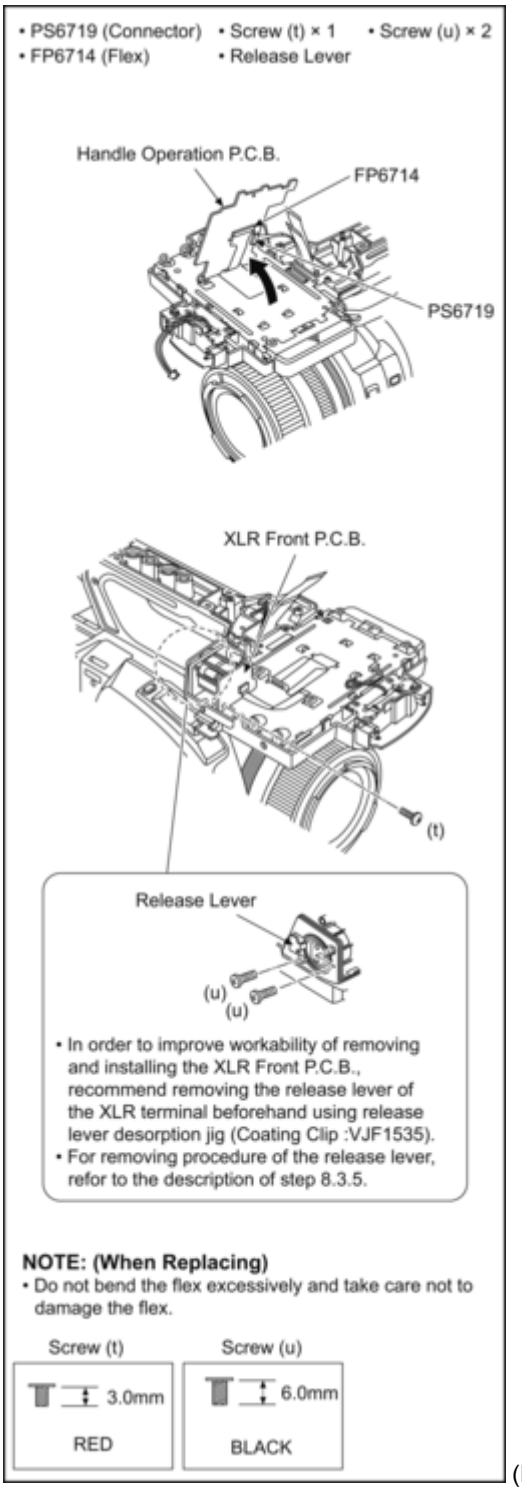

(Fig. D32)

(Fig.

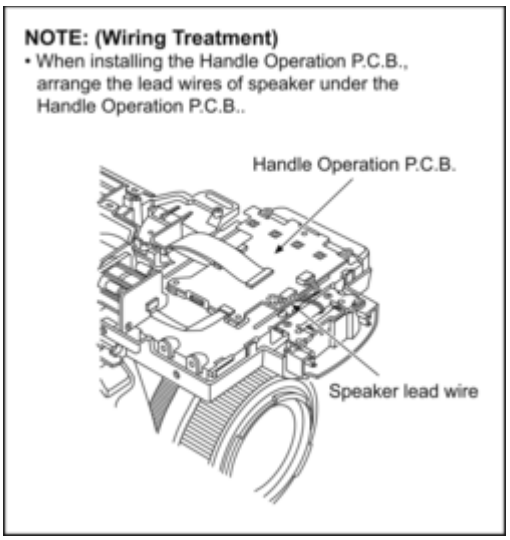

D33)

8.3.21 Removal of the Handle Slide Ass'y

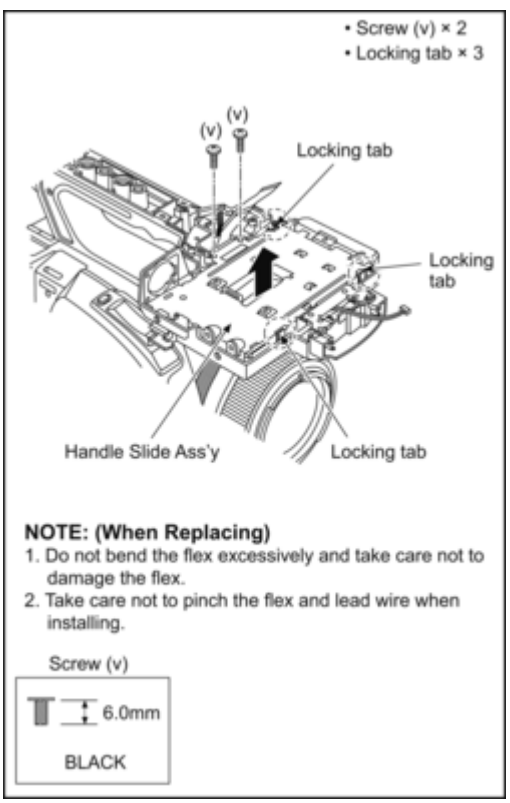

(Fig. D34)

8.3.22 Removal of the LCD Case T, LCD Unit, LCD Hinge Unit

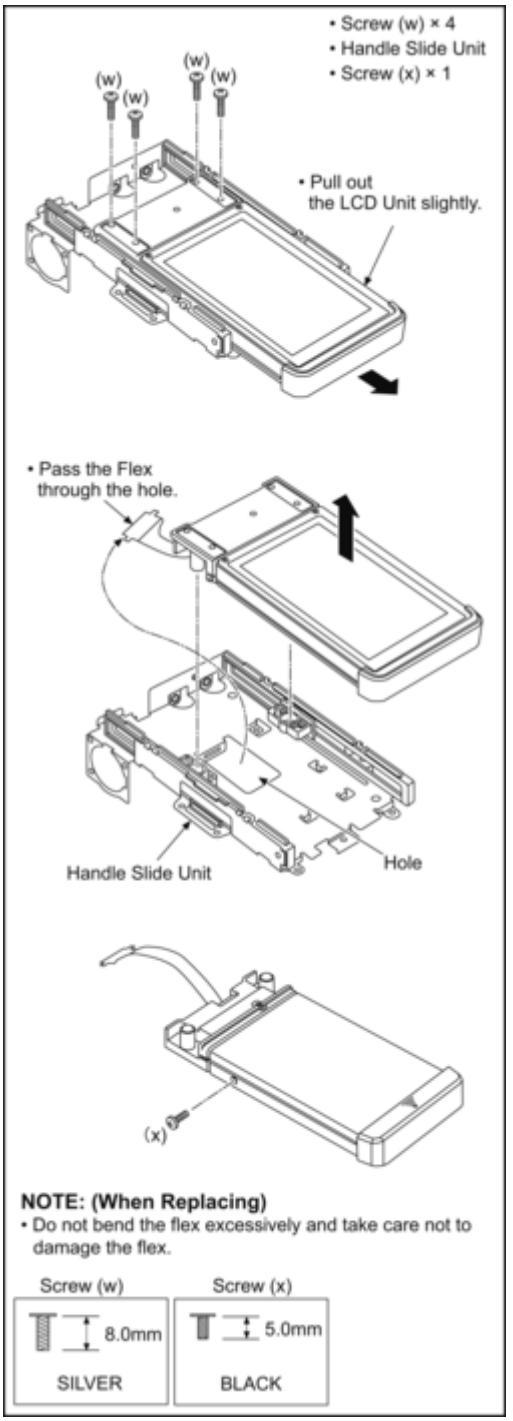

(Fig. D35)

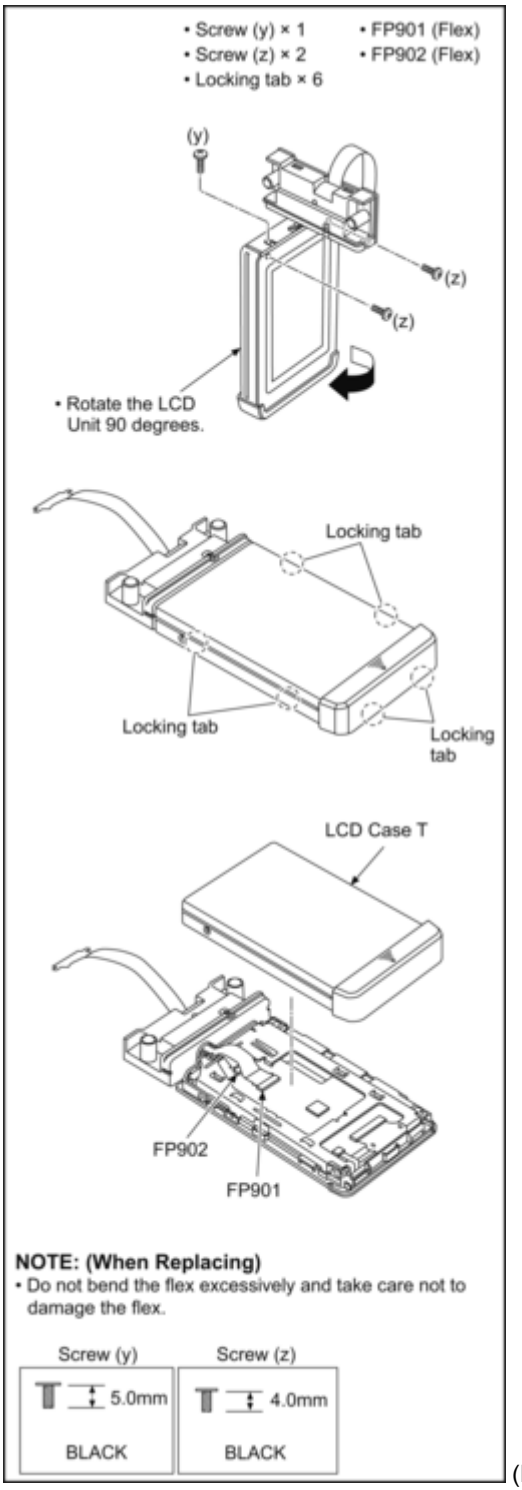

(Fig. D36)

(Fig.

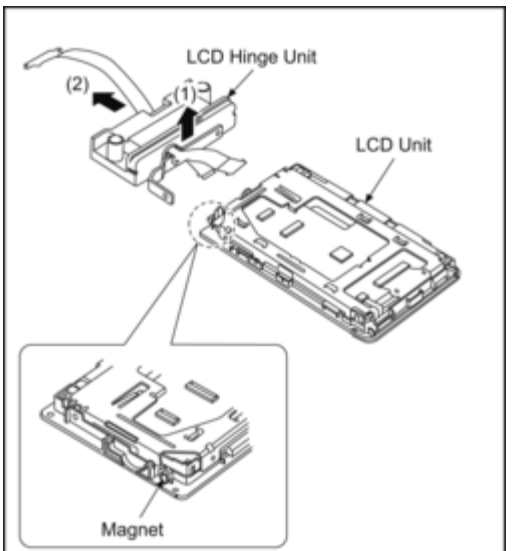

NOTE: (When Replacing)
- When removing the LCD HInge Unit, be careful the position shift of the magnet, and take care not to stick the magnet to LCD Hinge Unit.
- Do not bend the flex excessively and take care not to damage the flex.

D37)

8.3.23 Removal of the Monitor P.C.B., LCD

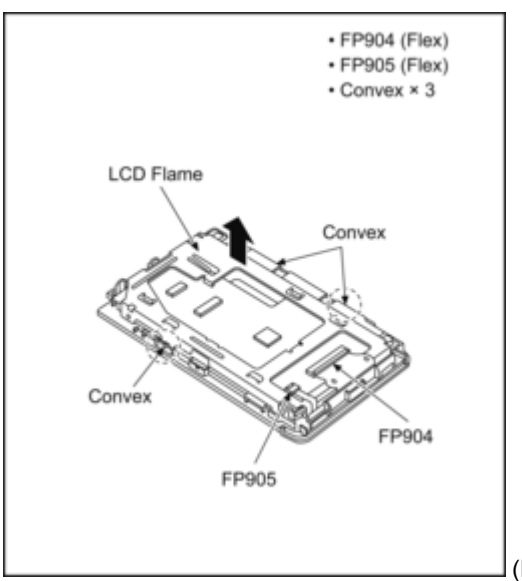

(Fig. D38)

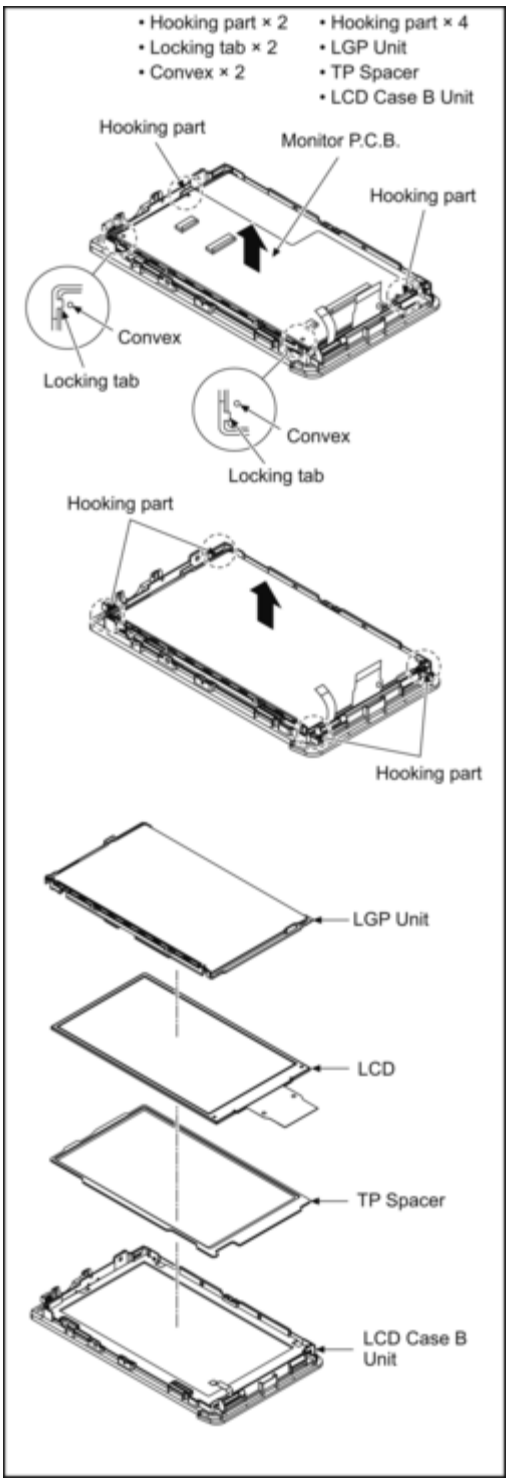

(Fig. D39)

8.3.24 Removal of the Handle Unit

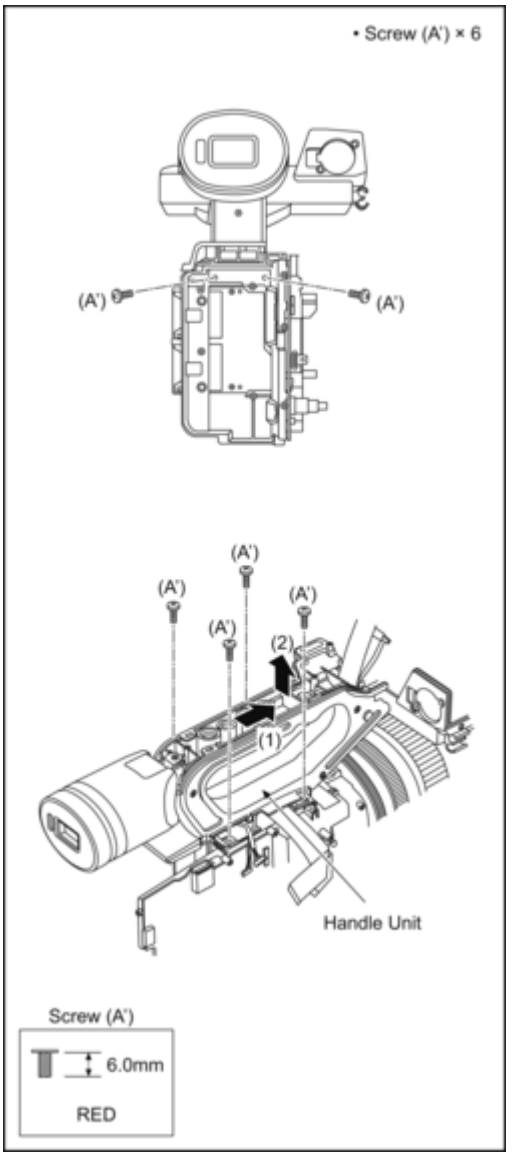

(Fig. D40)

8.3.25 Removal of the Speaker

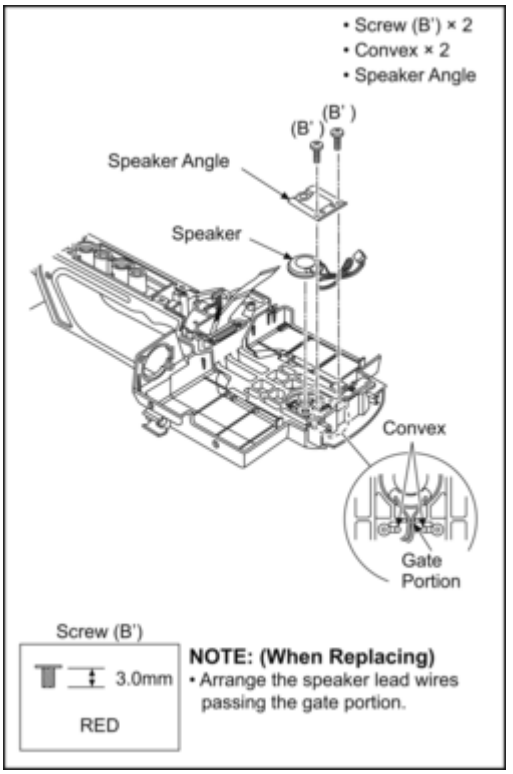

(Fig. D41)

8.3.26 Removal of the Handle Case B Unit

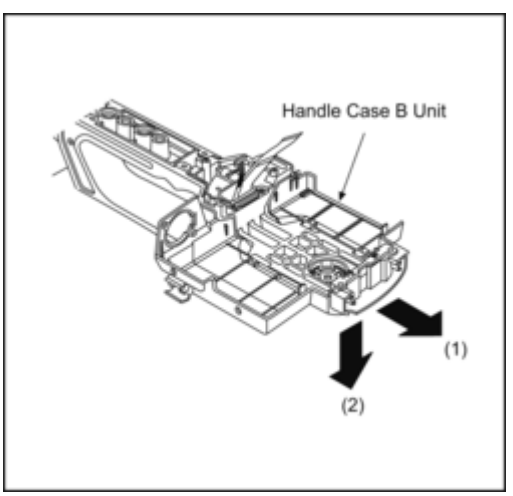

(Fig. D42)

8.3.27 Removal of the EVF Unit

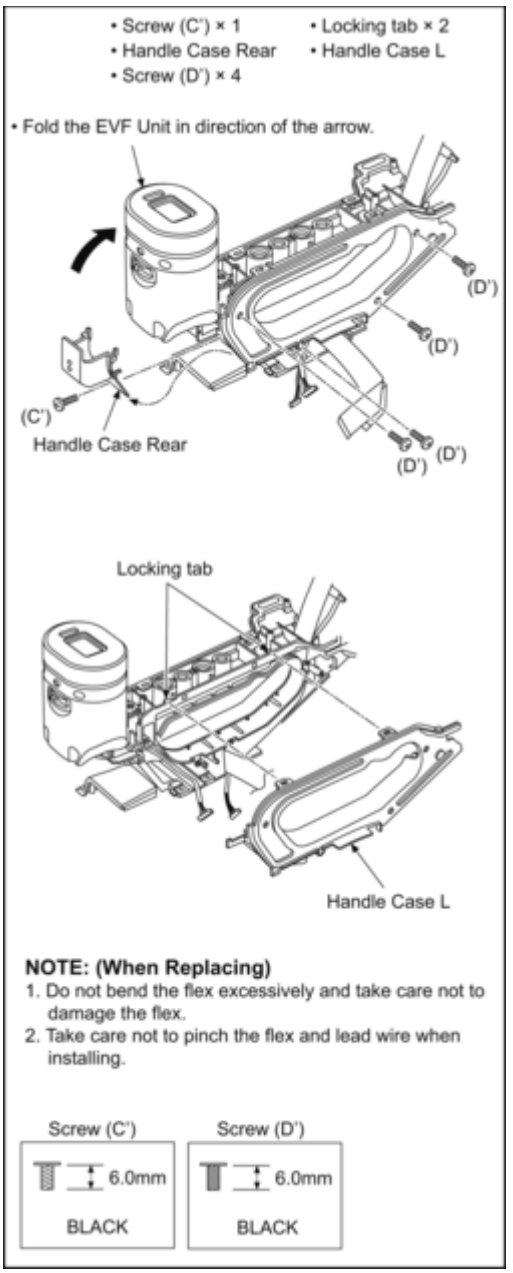

(Fig. D43)

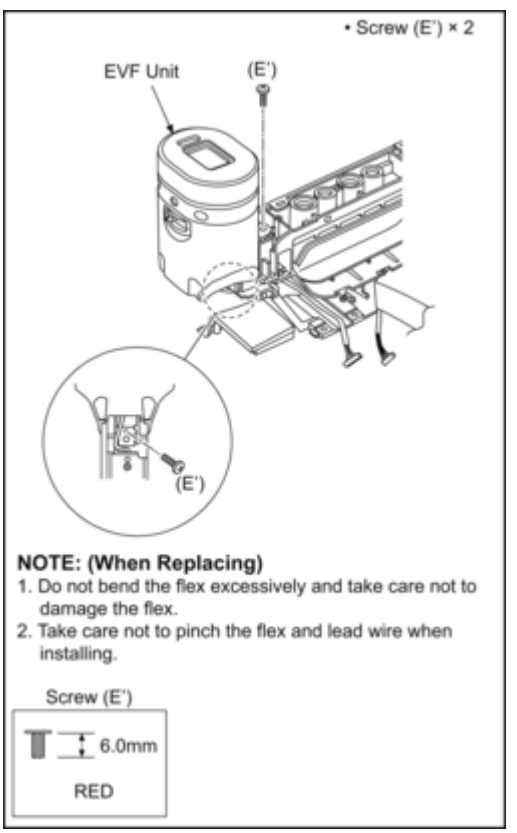

(Fig. D44)

8.3.28 Removal of the EVF P.C.B., Eye Sensor P.C.B.

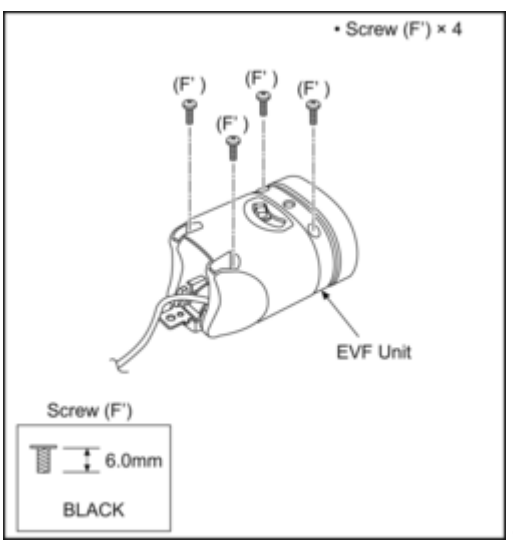

(Fig. D45)

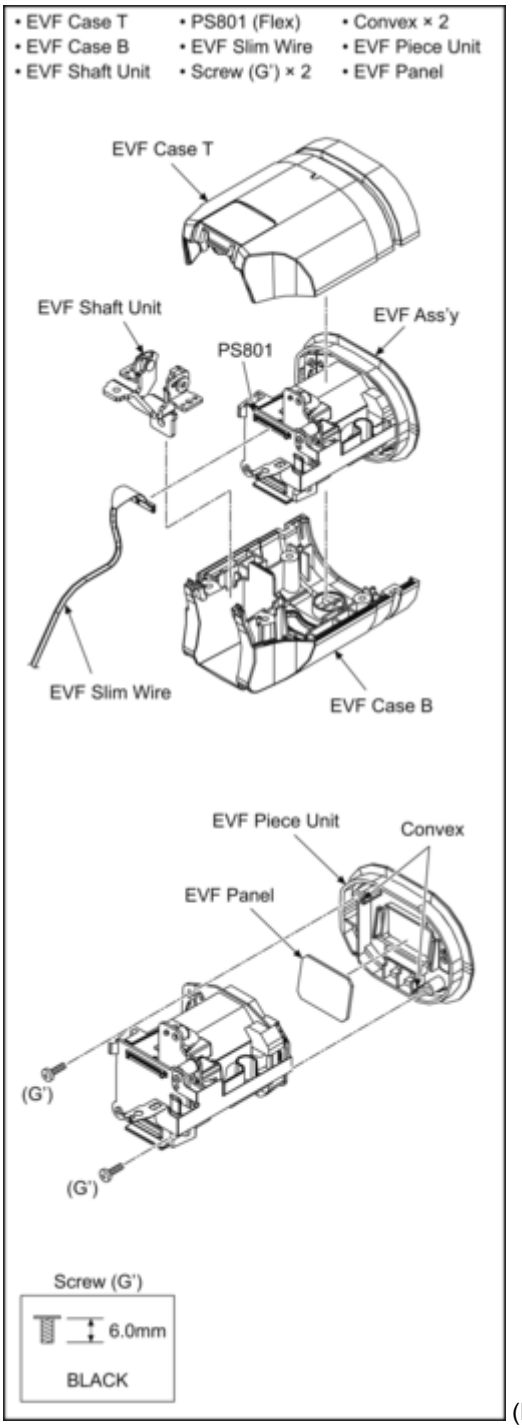

(Fig. D46)

(Fig.

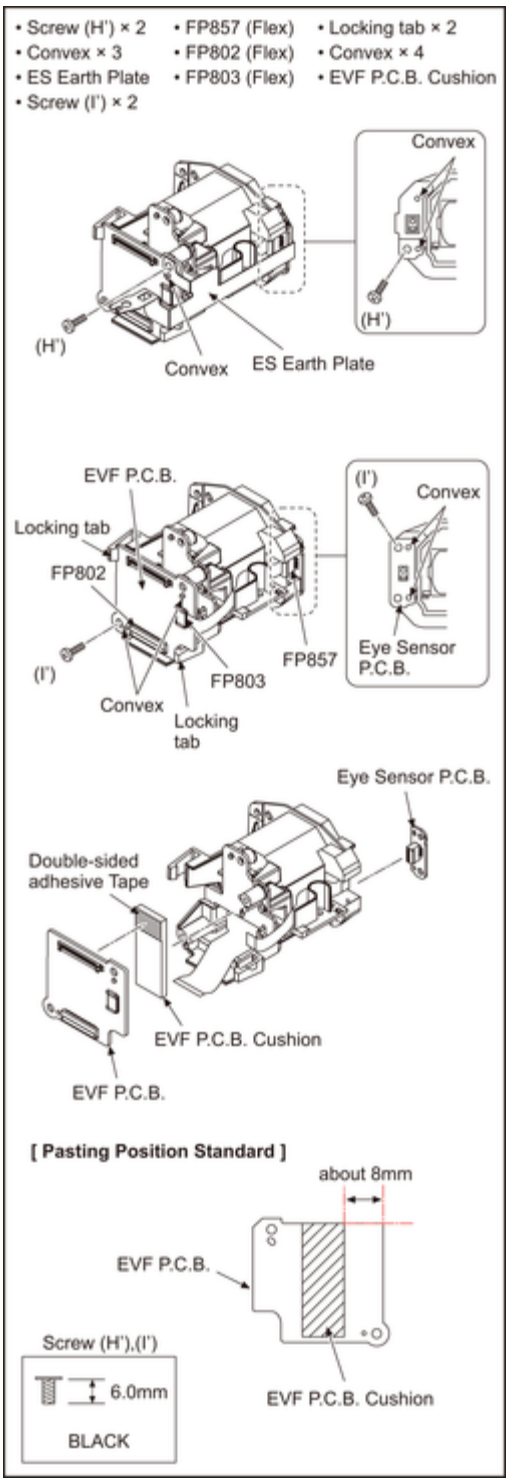
• Screw (H') × 2
• Convex × 3
• ES Earth Plate
• Screw (I') × 2
• FP857 (Flex)
• FP802 (Flex)
• FP803 (Flex)
• Locking tab × 2
• Convex × 4
• EVF P.C.B. Cushion
Convex
(H')
(H')
Convex
ES Earth Plate
EVF P.C.B.
Locking tab
FP802
(I')
Convex
Locking tab
FP803
FP857
(I')
Convex
Eye Sensor P.C.B.
Eye Sensor P.C.B.
Double-sided adhesive Tape
EVF P.C.B. Cushion
EVF P.C.B.
[Pasting Position Standard]
about 8mm
EVF P.C.B.
EVF P.C.B. Cushion
Screw (H'),(I')
6.0mm
BLACK

D47)

9 Measurements and Adjustments

9.1 Electric Adjustment

- An exclusive jig are necessary for electric adjustment.
- Connection and location method of the main unit and an exclusive adjustment jig as follows.

Figure of connection

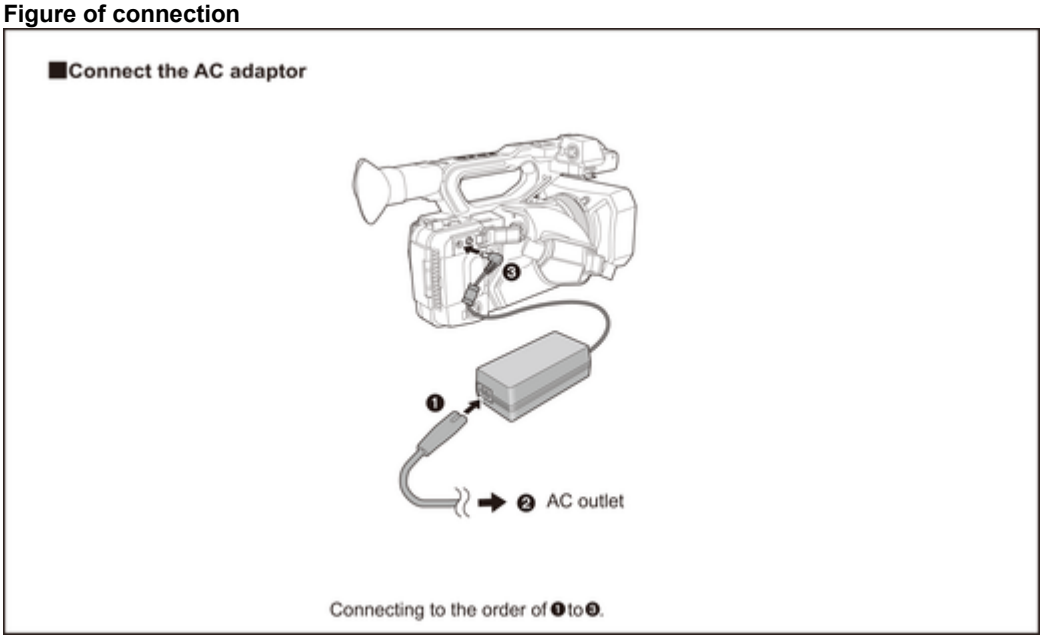

Figure of image when adjustment (Befor adjutment, remove the Lens Hood Unit.)

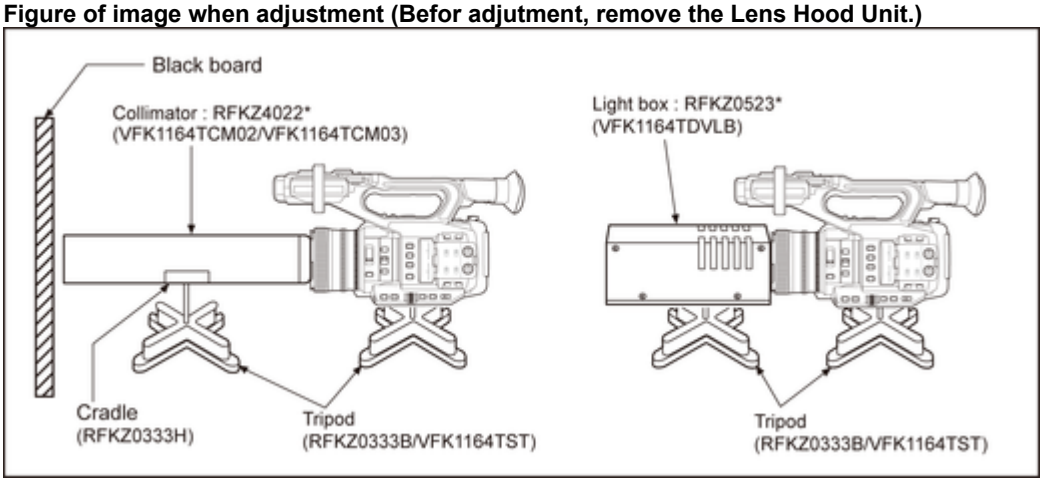

Part Number of jig

1. Basic Jig

Item	Contents
AC adaptor	Bandled with camcorder
AC Cable	Bandled with camcorder

2. Optical Jig for Camera Adjustment

Item		Part number	Remarks
Light box		VFK1164TDVLB/RFKZ0523*	Need external power supply: 12V ± 0.1V /1.8A or over
Collimator with focus chart		VFK1164TCM02/VFK1164TCM03/RFKZ0422*	Same as DSC
CC filter	5100K	VFK1164CC10G	For outdoor white balance adjutment
C4 Filter	5100K	VFK1164LBB4	For outdoor white balance adjustment
C8 Filter	5100K	VFK1164LBB8	For outdoor white balance adjustment
ND Filter 0.6	3100K/5100K	VFK1164ND06	For indor/outdoor white balance adjustment
Adjustment chart for Level Shot		Bandled with this Manual	For Level shot adjustment
Adjustment chart for Finite Focus		Bandled with this Manual	For Finite Focus adjustment

* RFKZ0523 and RFKZ0422 (same as DSC) is recommended.

[Level Shot Adjutment Chart]

[Finite Focus Adjutment Chart]

9.1.1 About Light Box

When using VFK1164TDVLB Light Box
If using VFK1164TDVLB Light Box, remove the lens connection ring by loosing thumbscrew and three hexagon screws.
* RFKZ0523 Light Box has no lens connection ring.

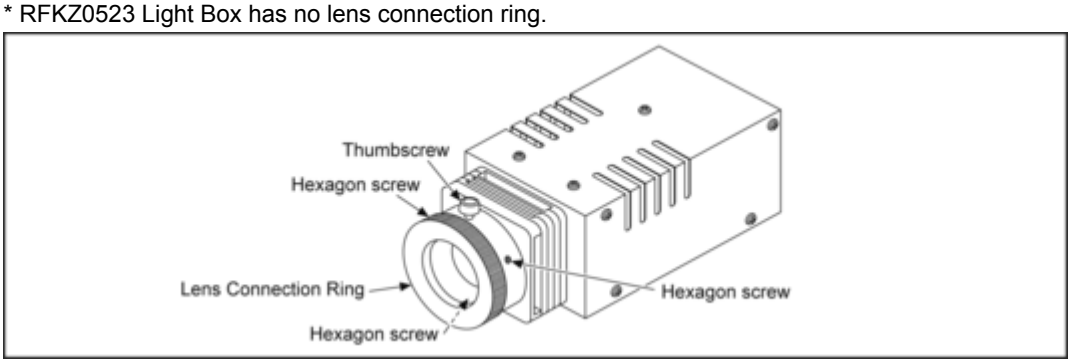

How to remove the Front Hood
In order to utilize maximum of the diffusing surface of light box, some adjustment items need the distance between diffusing surface of light box and camera body becomes several cent-meters.
Before the adjustments, remove the front hood of light box following steps below.
[For VFK1164TDVLB Light Box]

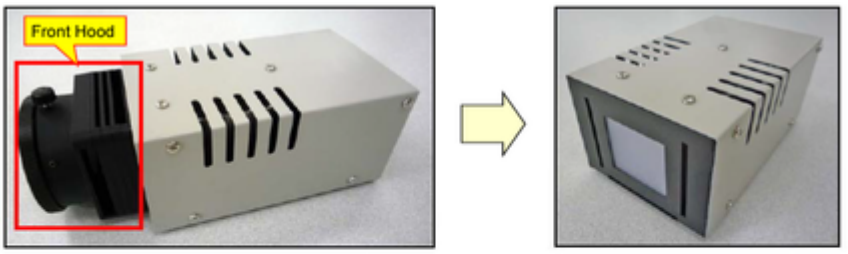

(1) Unscrew the 8 screws.
Slide the body case, then lift it up.

(2) Unscrew the 4 screws.

(3) Remove the front hood. Install the body case, then tighten the 8 screws.

[For RFKZ0523 Light Box]

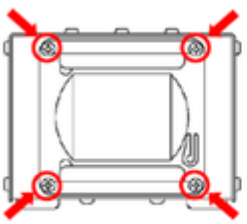

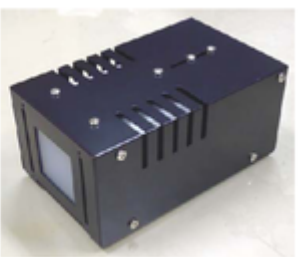

Unscrew the 4 screws, then remove the front hood.

9.1.2 Adjustment Items

Adjustment item as follows.

Replacement part \ Adjustment item			Adjustment									Settings		
			Wide angle of view adjustment *2	Zoom Lever adjustment	Camera adjustment	Zoom/tracking adjustment	Finite focus adjustment	Indoor white balance adjustment	Outdoor white balance adjustment	Black blemish compensation	Level shot adjustment *1	Touch panel calibration	Model setting	Factory settings
MAIN P.C.B.			O	O	O	O	O	O	O	O	O	-	O	O
	IC701	LENS DRIVE IC	-	-	O	O	O	-	-	-	O	-	-	-
	IC402	ROLL GYRO	-	-	O	-	-	-	-	-	O	-	-	-
	IC1231	DC/DC_IC (REG1.8V_I/O)	-	-	-	-	-	O	O	-	O	-	-	-
	IC1421	REG3V_I/O	-	O	-	-	-	O	O	-	O	-	-	-
	IC3401	VENUS ENGINE	-	-	-	-	-	-	-	-	O	-	-	-
	IC3501	VENUS ENGINE	-	O	-	-	-	-	-	-	O	-	-	-
	IC3404 *2	FLASH ROM	O	O	O	O	O	O	O	O	O	-	O	O
BATTERY CATCHER P.C.B.			-	-	O	-	-	-	-	-	O	-	-	-
	IC6301	PIT/YAW GYRO	-	-	O	-	-	-	-	-	O	-	-	-
	IC6302	ACCELEROMETER	-	-	-	-	-	-	-	-	O	-	-	-
CAMERA LENS UNIT			O	-	O	O	O	O	O	O	O	-	-	-
LCD UNIT / LCD			-	-	-	-	-	-	-	-	O	O	-	-

*1･･･When parts are exchanged, this adjustment is indispensable.
*2･･･Refer to 7 Service Fixture & Tools for detailed adjustment method.

9.1.3 Adjustment Procedure

All adjustments except “Touch Panel Calibration” , “Wide Angle of View adjustment” and “Factory Setting” performs using “14 Adjustment function for the service” in service mode menu.
“Touch Panel Calibration” is performed using 16 of service mode menu, “Wide Angle of View adjustment” is performed

using 8 of Service mode menu and “Factory Setting” is performed using 1 of service mode menu. Refer to “6 Service mode”, “7 Service Fixture &Tools” and “10 Factory Setting”.

[Execute adjustment function for service]

1. Set the power switch to ON, and turn to ON.
2. While pressing the “MENU”button to “FOCUS ASSIST”button and “Zoom lever” (or “Sub zoom lever”) to W side for more than
   3 seconds until the top screen of the Service Mode Menu being displayed.

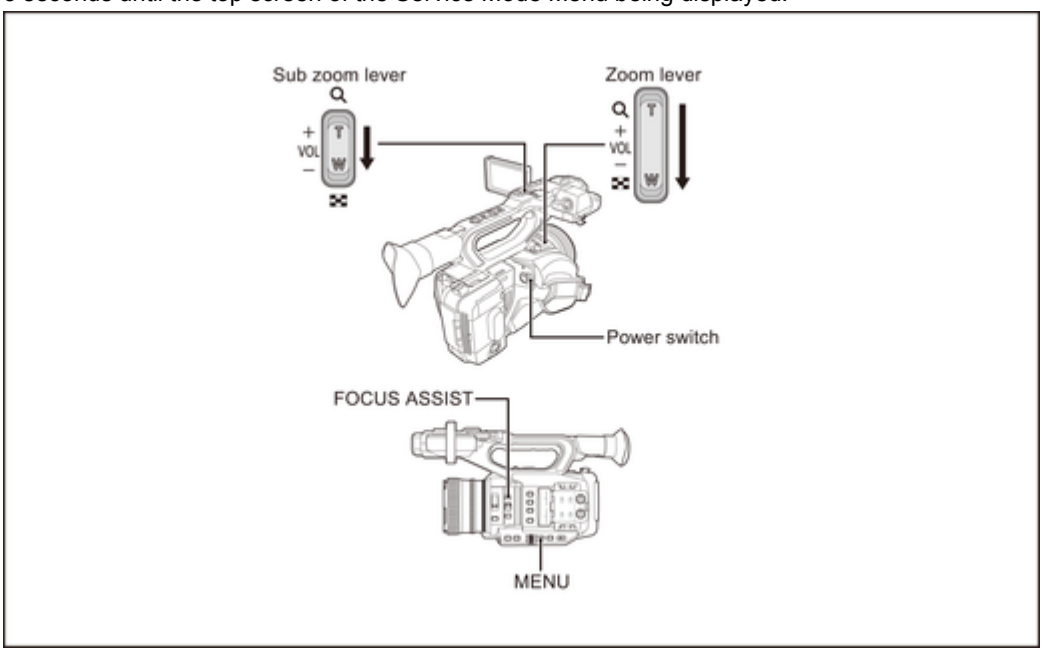

3. Touch the ▼ once then touch the [14] of LCD.
4. Touch the [YES] of LCD.

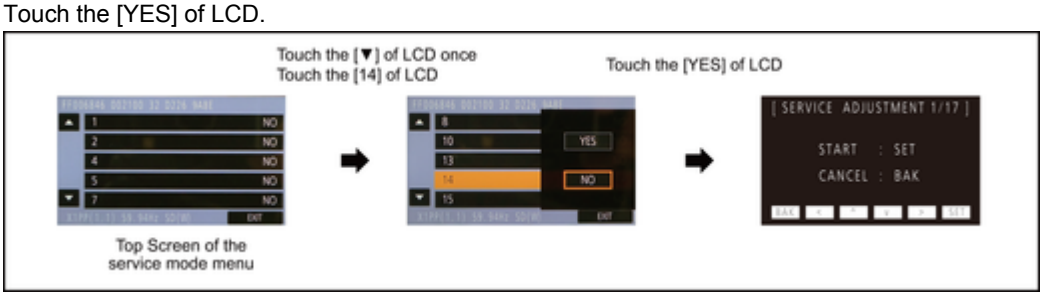

[Adjustment Procedure]
Adjustments and settings are performed following order:

1. Model setting
2. Filename setting for backup to SD card
3. Backing up adjustment data to SD card
4. Checking switches
5. Zoom Lever adjustment
6. Camera adjustment
7. Zoom/Tracking adjustment
8. Finite Focus adjustment
9. Indoor White Balance adjustment (3100K)
10. Outdoor White Balance adjustment (5100K)
11. Black Blemish Compensation
12. Lenz Vignetting Correction → Skip*
13. Level Shot adjustment

14. Internal Clock 27MHz adjustment → Skip*
15. Eye Sensor adjustment → Skip*

* Skip : Do not perform this adjustment. For skipping the adjustment, to touch the [BAK] of LCD.

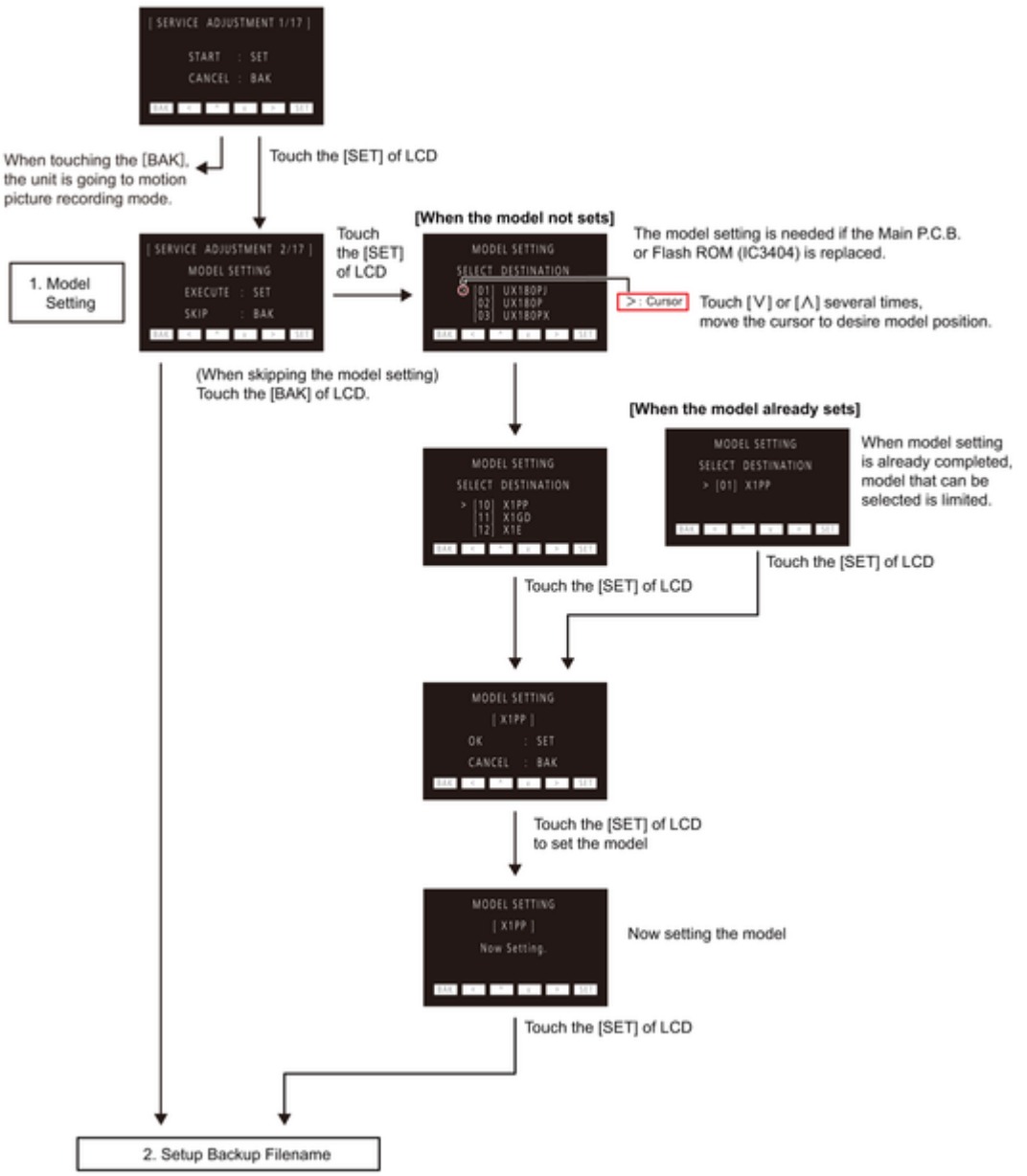

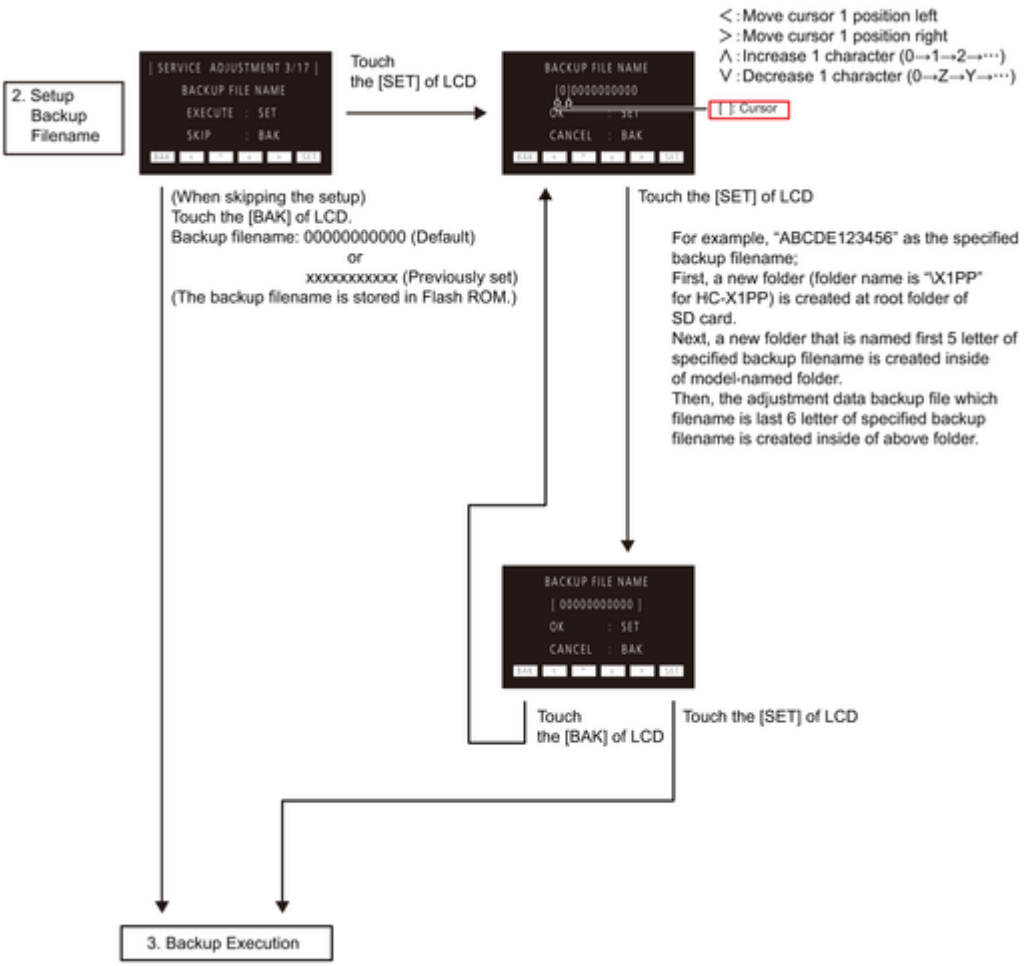
2. Setup Backup Filename
[SERVICE ADJUSTMENT 3/17]
BACKUP FILE NAME
EXECUTE : SET
SKIP : BAK
Touch the [SET] of LCD
BACKUP FILE NAME
[0]0000000000
OK : SET
CANCEL : BAK
< : Move cursor 1 position left
> : Move cursor 1 position right
∧ : Increase 1 character (0→1→2→···)
∨ : Decrease 1 character (0→Z→Y→···)
[ ] : Cursor
(When skipping the setup)
Touch the [BAK] of LCD.
Backup filename: 00000000000 (Default)
or
xxxxxxxxxxx (Previously set)
(The backup filename is stored in Flash ROM.)
Touch the [SET] of LCD
For example, "ABCDE123456" as the specified backup filename;
First, a new folder (folder name is "\X1PP" for HC-X1PP) is created at root folder of SD card.
Next, a new folder that is named first 5 letter of specified backup filename is created inside of model-named folder.
Then, the adjustment data backup file which filename is last 6 letter of specified backup filename is created inside of above folder.
BACKUP FILE NAME
[00000000000]
OK : SET
CANCEL : BAK
Touch the [BAK] of LCD
Touch the [SET] of LCD
3. Backup Execution

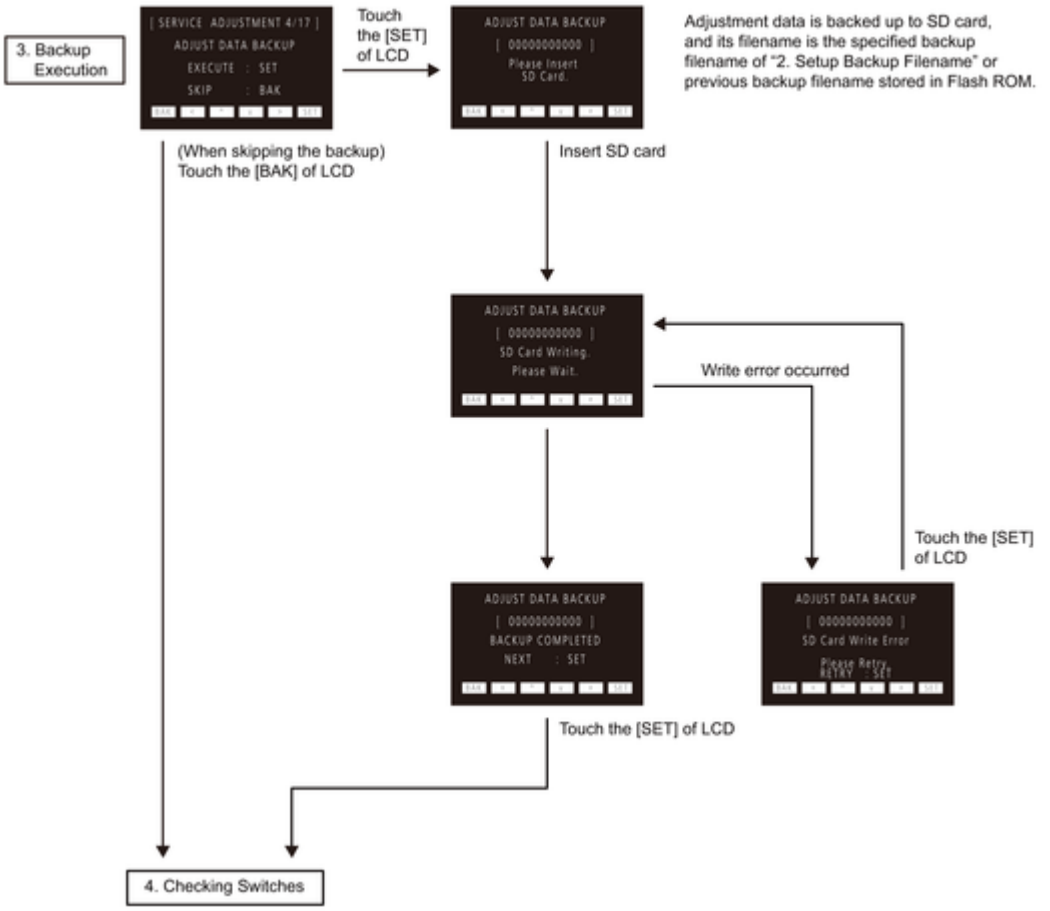
3. Backup Execution
[SERVICE ADJUSTMENT 4/17]
ADJUST DATA BACKUP
EXECUTE : SET
SKIP : BAK
Touch the [SET] of LCD
ADJUST DATA BACKUP
[00000000000]
Please Insert SD Card.
Adjustment data is backed up to SD card, and its filename is the specified backup filename of "2. Setup Backup Filename" or previous backup filename stored in Flash ROM.
(When skipping the backup) Touch the [BAK] of LCD
Insert SD card
ADJUST DATA BACKUP
[00000000000]
SD Card Writing.
Please Wait.
Write error occurred
Touch the [SET] of LCD
ADJUST DATA BACKUP
[00000000000]
BACKUP COMPLETED
NEXT : SET
ADJUST DATA BACKUP
[00000000000]
SD Card Write Error
Please Retry.
RETRY : SET
Touch the [SET] of LCD
4. Checking Switches

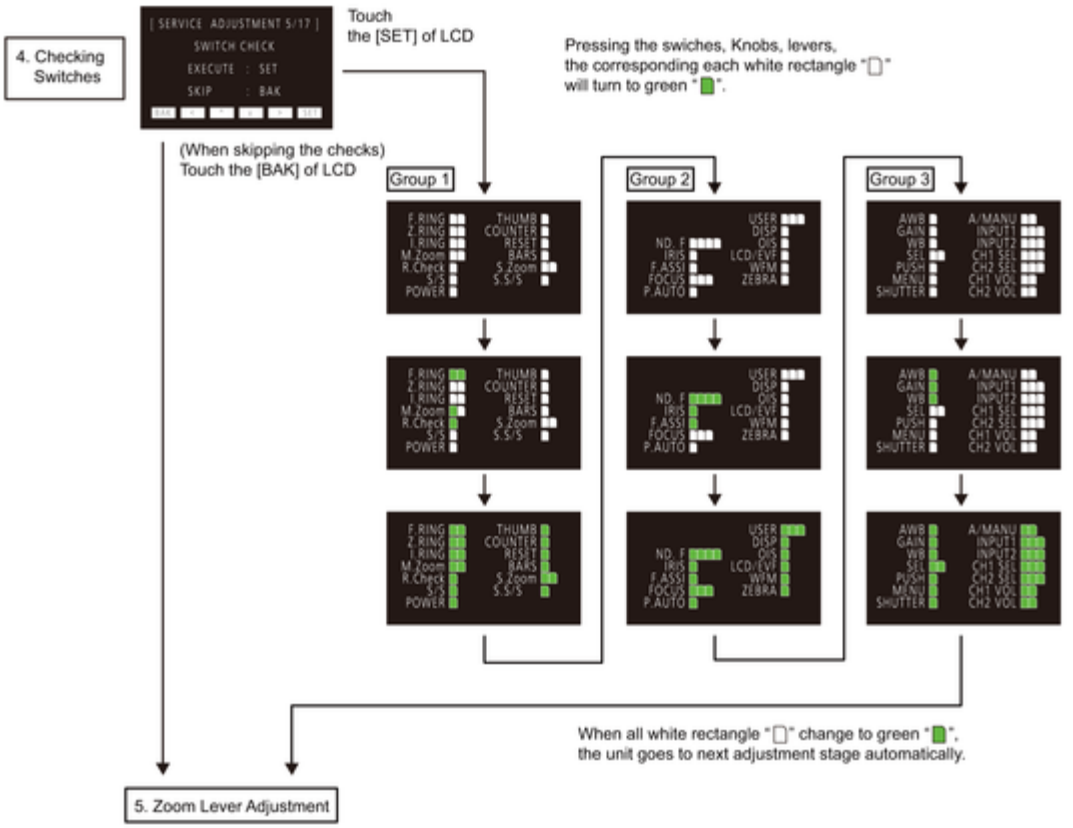

< Switches arrangement > * For location of switches, keys and etc., consult the pages of " Location of Controls and Components".

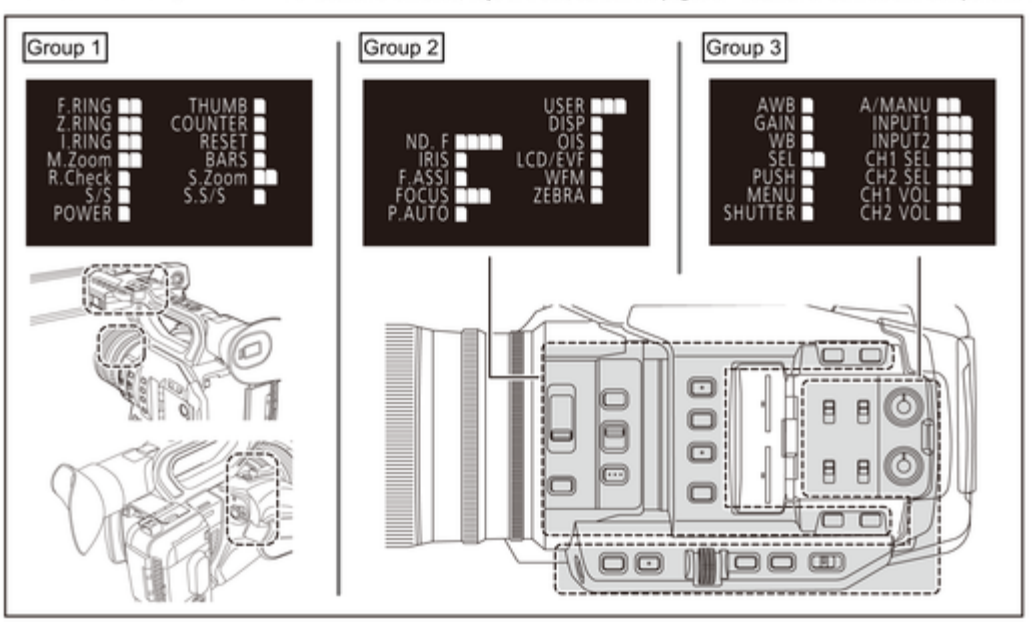

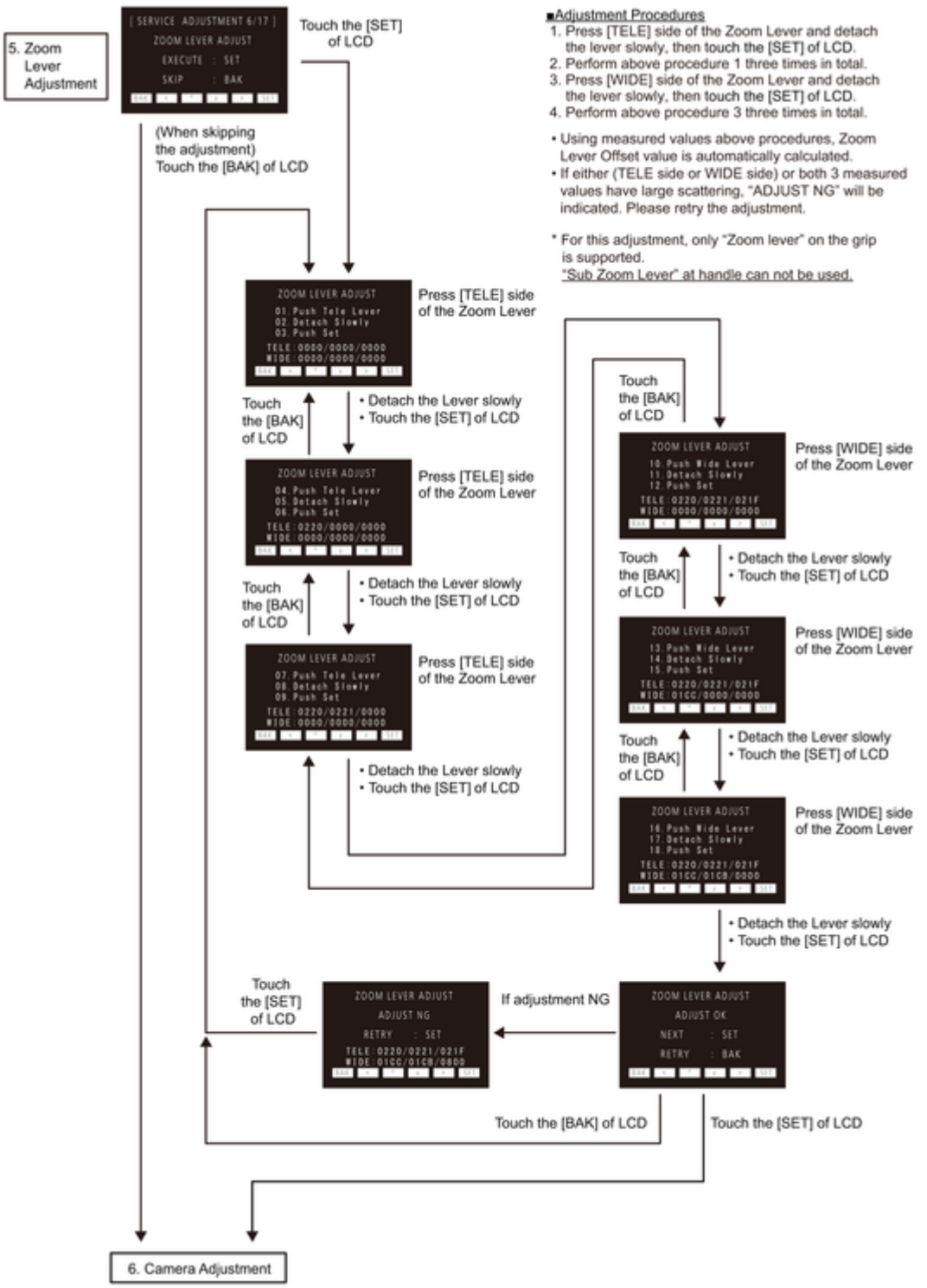
5. Zoom Lever Adjustment
[SERVICE ADJUSTMENT 6/17]
ZOOM LEVER ADJUST
EXECUTE : SET
SKIP : BAK
Touch the [SET] of LCD
(When skipping the adjustment) Touch the [BAK] of LCD
■Adjustment Procedures
1. Press [TELE] side of the Zoom Lever and detach the lever slowly, then touch the [SET] of LCD.
2. Perform above procedure 1 three times in total.
3. Press [WIDE] side of the Zoom Lever and detach the lever slowly, then touch the [SET] of LCD.
4. Perform above procedure 3 three times in total.
• Using measured values above procedures, Zoom Lever Offset value is automatically calculated.
• If either (TELE side or WIDE side) or both 3 measured values have large scattering, "ADJUST NG" will be indicated. Please retry the adjustment.
* For this adjustment, only "Zoom lever" on the grip is supported.
"Sub Zoom Lever" at handle can not be used.
ZOOM LEVER ADJUST
01. Push Tele Lever
02. Detach Slowly
03. Push Set
TELE:0000/0000/0000
WIDE:0000/0000/0000
Press [TELE] side of the Zoom Lever
Touch the [BAK] of LCD
• Detach the Lever slowly
• Touch the [SET] of LCD
ZOOM LEVER ADJUST
04. Push Tele Lever
05. Detach Slowly
06. Push Set
TELE:0220/0000/0000
WIDE:0000/0000/0000
Press [TELE] side of the Zoom Lever
Touch the [BAK] of LCD
• Detach the Lever slowly
• Touch the [SET] of LCD
ZOOM LEVER ADJUST
07. Push Tele Lever
08. Detach Slowly
09. Push Set
TELE:0220/0221/0000
WIDE:0000/0000/0000
Press [TELE] side of the Zoom Lever
• Detach the Lever slowly
• Touch the [SET] of LCD
Touch the [BAK] of LCD
ZOOM LEVER ADJUST
10. Push Wide Lever
11. Detach Slowly
12. Push Set
TELE:0220/0221/021F
WIDE:0000/0000/0000
Press [WIDE] side of the Zoom Lever
Touch the [BAK] of LCD
• Detach the Lever slowly
• Touch the [SET] of LCD
ZOOM LEVER ADJUST
13. Push Wide Lever
14. Detach Slowly
15. Push Set
TELE:0220/0221/021F
WIDE:01CC/0000/0000
Press [WIDE] side of the Zoom Lever
Touch the [BAK] of LCD
• Detach the Lever slowly
• Touch the [SET] of LCD
ZOOM LEVER ADJUST
16. Push Wide Lever
17. Detach Slowly
18. Push Set
TELE:0220/0221/021F
WIDE:01CC/01C8/0000
Press [WIDE] side of the Zoom Lever
• Detach the Lever slowly
• Touch the [SET] of LCD
ZOOM LEVER ADJUST
ADJUST OK
NEXT : SET
RETRY : BAK
If adjustment NG
ZOOM LEVER ADJUST
ADJUST NG
RETRY : SET
TELE:0220/0221/021F
WIDE:01CC/01C8/0000
Touch the [SET] of LCD
Touch the [BAK] of LCD
Touch the [SET] of LCD
6. Camera Adjustment

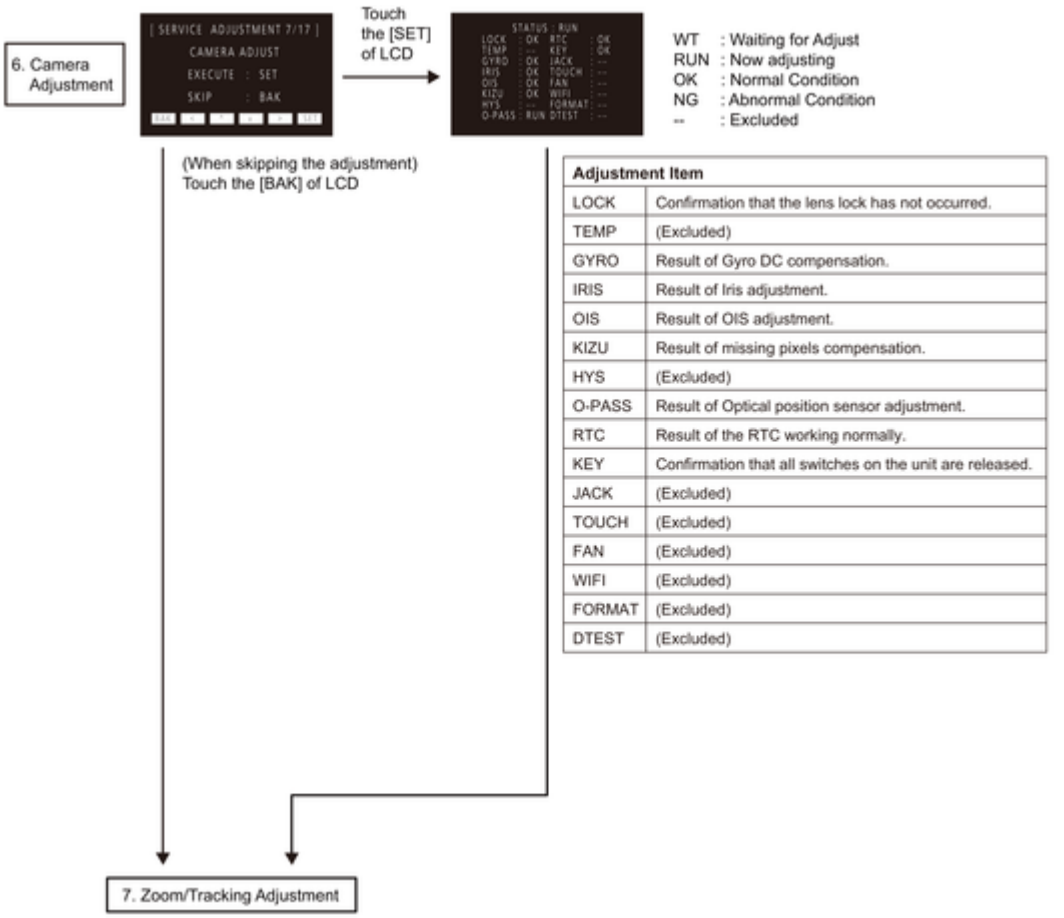

Adjustment Item	
LOCK	Confirmation that the lens lock has not occurred.
TEMP	(Excluded)
GYRO	Result of Gyro DC compensation.
IRIS	Result of Iris adjustment.
OIS	Result of OIS adjustment.
KIZU	Result of missing pixels compensation.
HYS	(Excluded)
O-PASS	Result of Optical position sensor adjustment.
RTC	Result of the RTC working normally.
KEY	Confirmation that all switches on the unit are released.
JACK	(Excluded)
TOUCH	(Excluded)
FAN	(Excluded)
WIFI	(Excluded)
FORMAT	(Excluded)
DTEST	(Excluded)

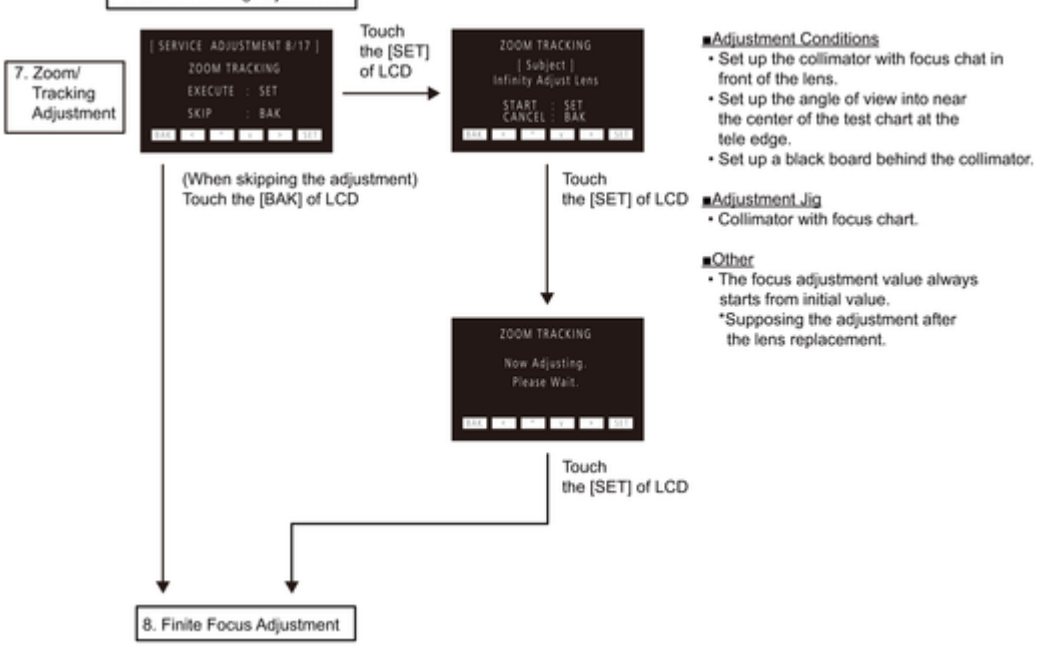

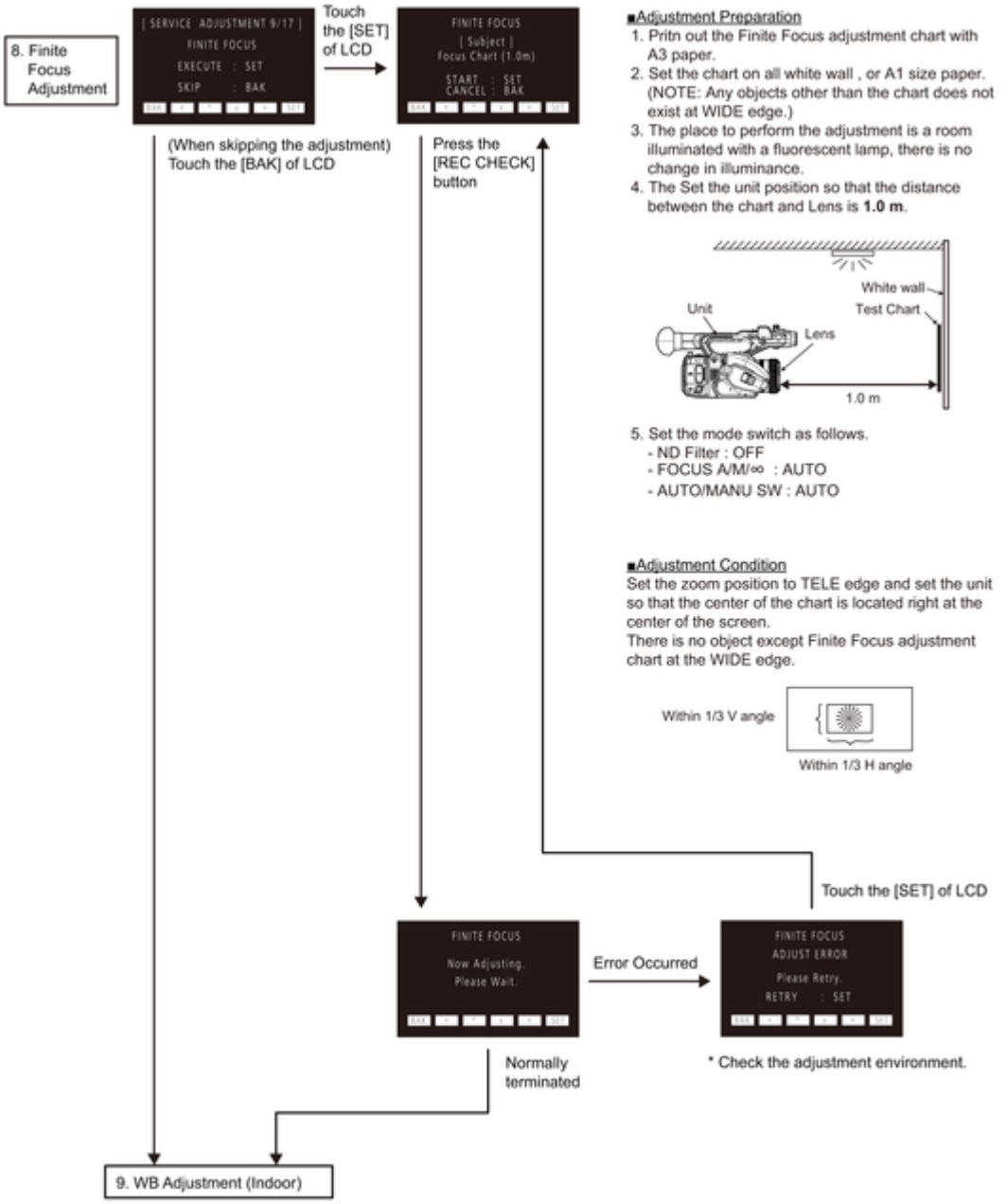
8. Finite Focus Adjustment
[SERVICE ADJUSTMENT 9/17]
FINITE FOCUS
EXECUTE : SET
SKIP : BAK
Touch the [SET] of LCD
FINITE FOCUS
[Subject]
Focus Chart (1.0m)
START : SET
CANCEL : BAK
(When skipping the adjustment) Touch the [BAK] of LCD
Press the [REC CHECK] button
■Adjustment Preparation
1. Pritn out the Finite Focus adjustment chart with A3 paper.
2. Set the chart on all white wall , or A1 size paper. (NOTE: Any objects other than the chart does not exist at WIDE edge.)
3. The place to perform the adjustment is a room illuminated with a fluorescent lamp, there is no change in illuminance.
4. The Set the unit position so that the distance between the chart and Lens is 1.0 m.
White wall
Test Chart
Unit
Lens
1.0 m
5. Set the mode switch as follows.
- ND Filter : OFF
- FOCUS A/M/∞ : AUTO
- AUTO/MANU SW : AUTO
■Adjustment Condition
Set the zoom position to TELE edge and set the unit so that the center of the chart is located right at the center of the screen.
There is no object except Finite Focus adjustment chart at the WIDE edge.
Within 1/3 V angle
Within 1/3 H angle
Touch the [SET] of LCD
FINITE FOCUS
Now Adjusting.
Please Wait.
Error Occurred
FINITE FOCUS
ADJUST ERROR
Please Retry.
RETRY : SET
* Check the adjustment environment.
Normally terminated
9. WB Adjustment (Indoor)

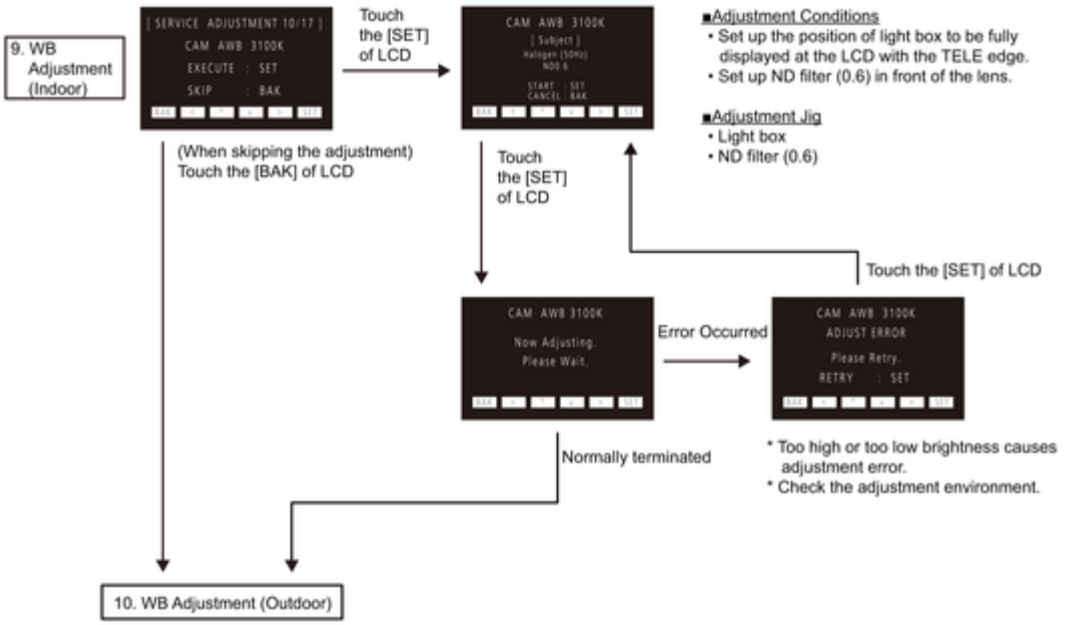
9. WB Adjustment (Indoor)
[SERVICE ADJUSTMENT 10/17]
CAM AWB 3100K
EXECUTE : SET
SKIP : BAK
Touch the [SET] of LCD
CAM AWB 3100K
[Subject]
Halogen (50Hz)
ND0.6
START : SET
CANCEL : BAK
■Adjustment Conditions
• Set up the position of light box to be fully displayed at the LCD with the TELE edge.
• Set up ND filter (0.6) in front of the lens.
■Adjustment Jig
• Light box
• ND filter (0.6)
(When skipping the adjustment) Touch the [BAK] of LCD
Touch the [SET] of LCD
Touch the [SET] of LCD
CAM AWB 3100K
Now Adjusting.
Please Wait.
Error Occurred
CAM AWB 3100K
ADJUST ERROR
Please Retry.
RETRY : SET
Normally terminated
* Too high or too low brightness causes adjustment error.
* Check the adjustment environment.
10. WB Adjustment (Outdoor)

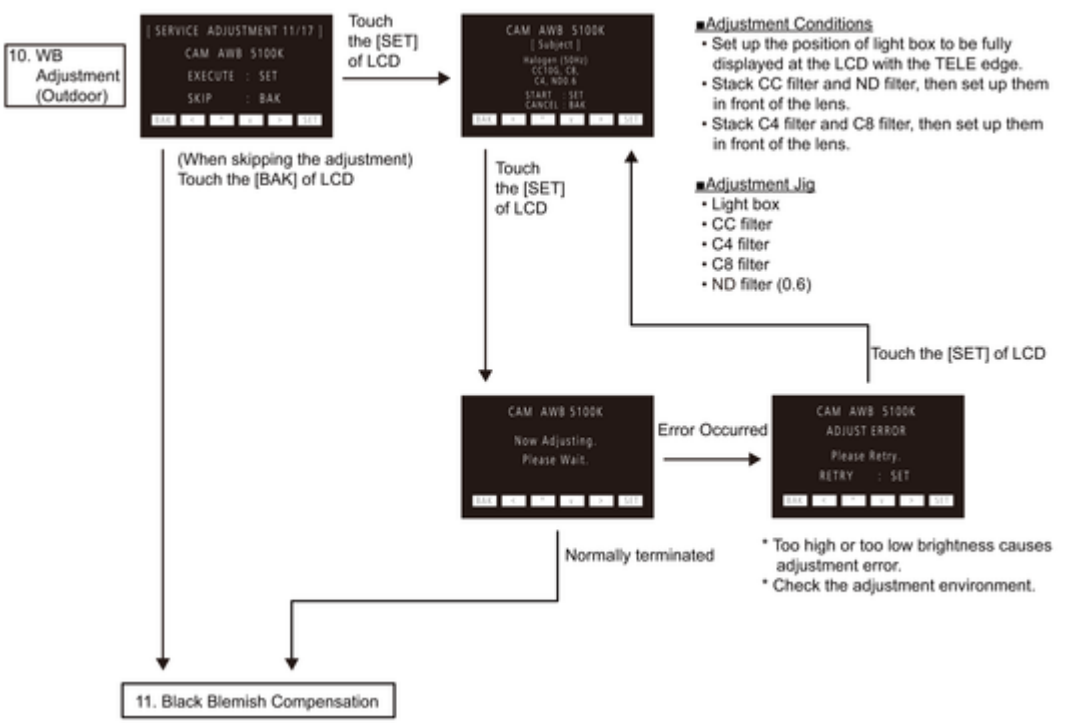
10. WB Adjustment (Outdoor)
[SERVICE ADJUSTMENT 11/17]
CAM AWB 5100K
EXECUTE : SET
SKIP : BAK
Touch the [SET] of LCD
CAM AWB 5100K
[Subject]
Halogen (50Hz)
CC100, C8, C4, ND0.6
START : SET
CANCEL : BAK
■Adjustment Conditions
• Set up the position of light box to be fully displayed at the LCD with the TELE edge.
• Stack CC filter and ND filter, then set up them in front of the lens.
• Stack C4 filter and C8 filter, then set up them in front of the lens.
■Adjustment Jig
• Light box
• CC filter
• C4 filter
• C8 filter
• ND filter (0.6)
(When skipping the adjustment) Touch the [BAK] of LCD
Touch the [SET] of LCD
Touch the [SET] of LCD
CAM AWB 5100K
Now Adjusting.
Please Wait.
Error Occurred
CAM AWB 5100K
ADJUST ERROR
Please Retry.
RETRY : SET
Normally terminated
* Too high or too low brightness causes adjustment error.
* Check the adjustment environment.
11. Black Blemish Compensation

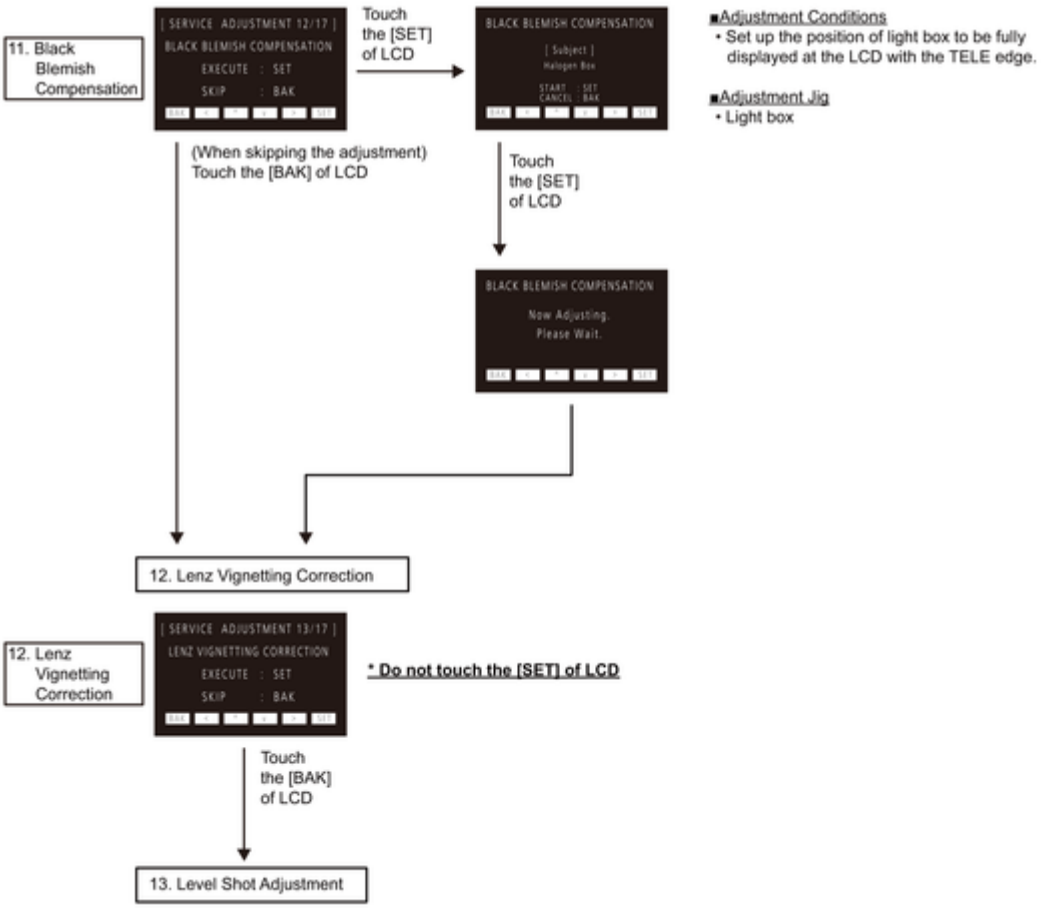
11. Black Blemish Compensation
[SERVICE ADJUSTMENT 12/17]
BLACK BLEMISH COMPENSATION
EXECUTE : SET
SKIP : BAK
Touch the [SET] of LCD
BLACK BLEMISH COMPENSATION
[Subject]
Halogen Box
START : SET
CANCEL : BAK
■Adjustment Conditions
• Set up the position of light box to be fully displayed at the LCD with the TELE edge.
■Adjustment Jig
• Light box
(When skipping the adjustment)
Touch the [BAK] of LCD
Touch the [SET] of LCD
BLACK BLEMISH COMPENSATION
Now Adjusting.
Please Wait.
12. Lenz Vignetting Correction
12. Lenz Vignetting Correction
[SERVICE ADJUSTMENT 13/17]
LENZ VIGNETTING CORRECTION
EXECUTE : SET
SKIP : BAK
* Do not touch the [SET] of LCD
Touch the [BAK] of LCD
13. Level Shot Adjustment

13. Level Shot Adjustment

[SERVICE ADJUSTMENT 14/17]
BALANCE SHOT
EXECUTE : SET
SKIP : BAK

Touch the [SET] of LCD

BALANCE SHOT
[Subject]
Cross Line Chart
START : REC CHECK
CANCEL : BAK

(When skipping the adjustment)
Touch the [BAK] of LCD

Press the [REC CHECK] button

■Adjustment Conditions
- To retract the LCD monitor.
- Shot the test chart to be displayed in full screen.

Distance (between end of lens and the chart):
100mm~150mm

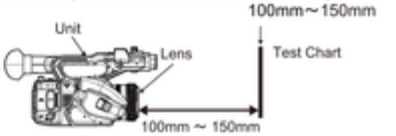

- Unit Installation Condition

Horizontal Tilt (ROLL) : with in ± 1.45°

Vertical Tilt (PITCH) : with in ± 0.8°

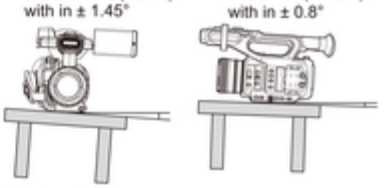

■Adjustment Jig
- Test Chart

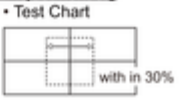

[Chart Size]
A4
Print the test chart that white line to be 0.7mm width inside the vertical line.
[Test Angle]
Confirm that the vertical line is with in ±30% of the center of the screen.
Confirm that the horizontal line is displayed in both ends of screen.

[Test Chart Levelness]
Horizontal tilt (ROLL) : with in ±0.1°
Horizontal tilt (YAW) : with in ±5.0°
Vertical tilt (PITCH) : with in ±5.0°

Touch the [SET] of LCD

BALANCE SHOT
Now Adjusting.
Please Wait.

Error Occurred

BALANCE SHOT
ADJUST REEOR
Please Retry.
RETRY : SET

Normally terminated

◇Level Management by Yarn Hanging

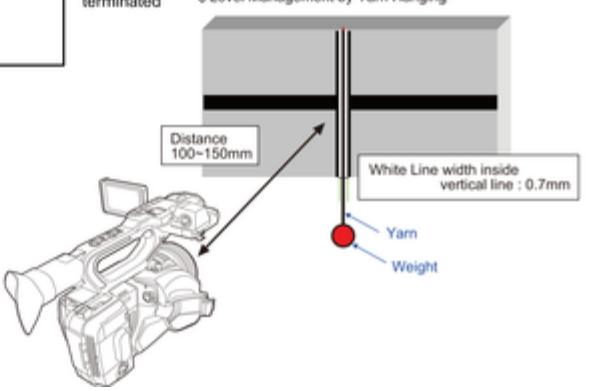

14. Internal Clock 27MHz Adjustment

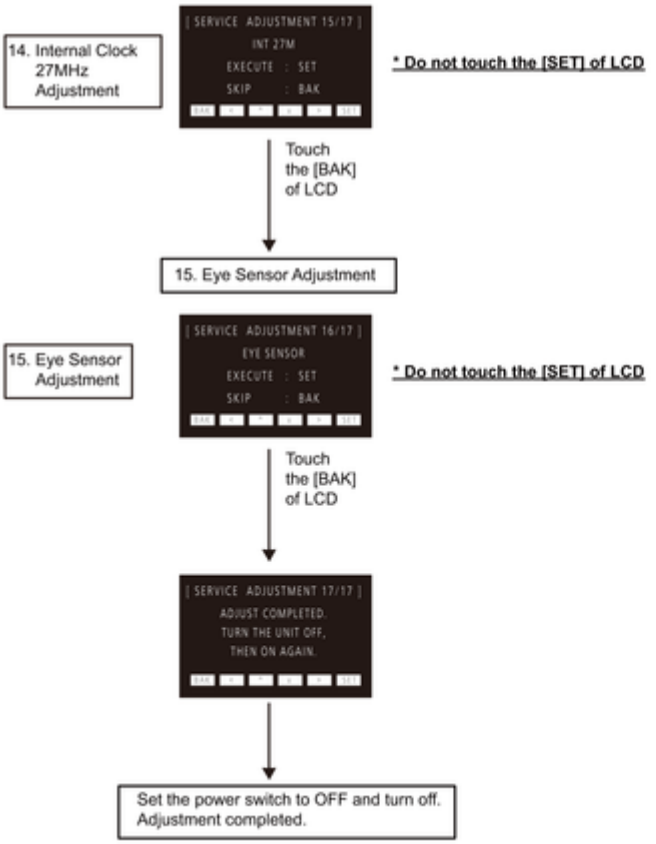
14. Internal Clock 27MHz Adjustment
[SERVICE ADJUSTMENT 15/17]
INT 27M
EXECUTE : SET
SKIP : BAK
* Do not touch the [SET] of LCD
Touch the [BAK] of LCD
15. Eye Sensor Adjustment
15. Eye Sensor Adjustment
[SERVICE ADJUSTMENT 16/17]
EYE SENSOR
EXECUTE : SET
SKIP : BAK
* Do not touch the [SET] of LCD
Touch the [BAK] of LCD
[SERVICE ADJUSTMENT 17/17]
ADJUST COMPLETED.
TURN THE UNIT OFF,
THEN ON AGAIN.
Set the power switch to OFF and turn off.
Adjustment completed.

10 Factory Setting

10.1 How To Turn On The Factory Settings?

1. Set the Power switch to ON, and turn to ON.
2. While pressing the “MENU”button to “FOCUS ASSIST”button and “Zoom lever” (or “Sub zoom lever”) to W side for more than
   3 seconds until the top screen of the Service Mode Menu being displayed.

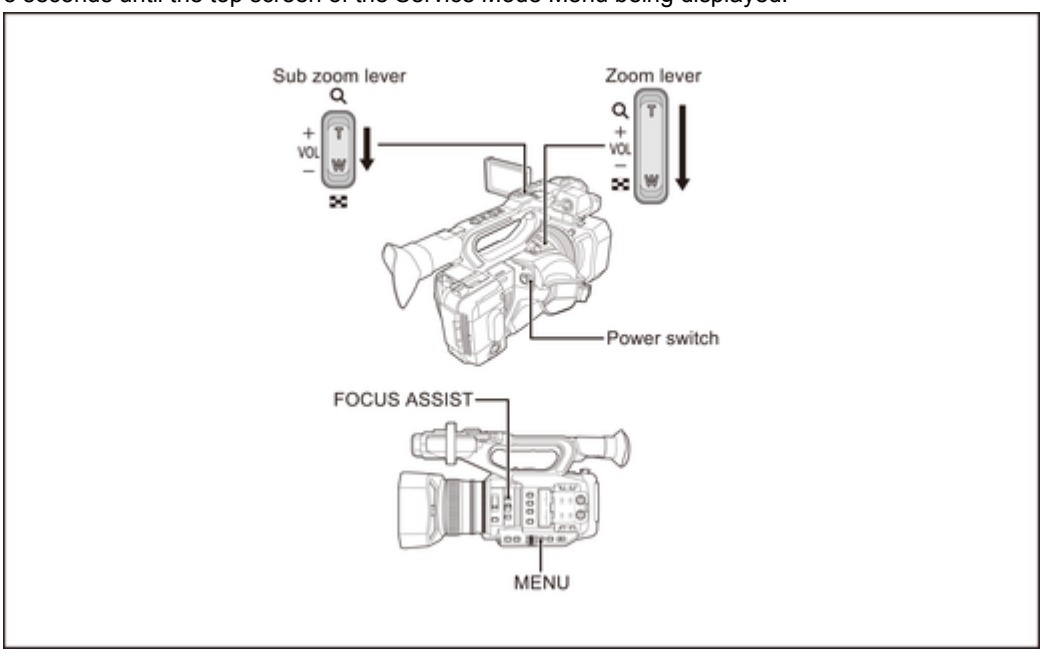

3. Touch the [1] of LCD.
4. Touch the [YES] of LCD.
5. After few seconds “END” is displayed on LCD monitor. Cutting of battery connection or AC power supply connection as a
   completion of the “FACTORY SETTINGS”.

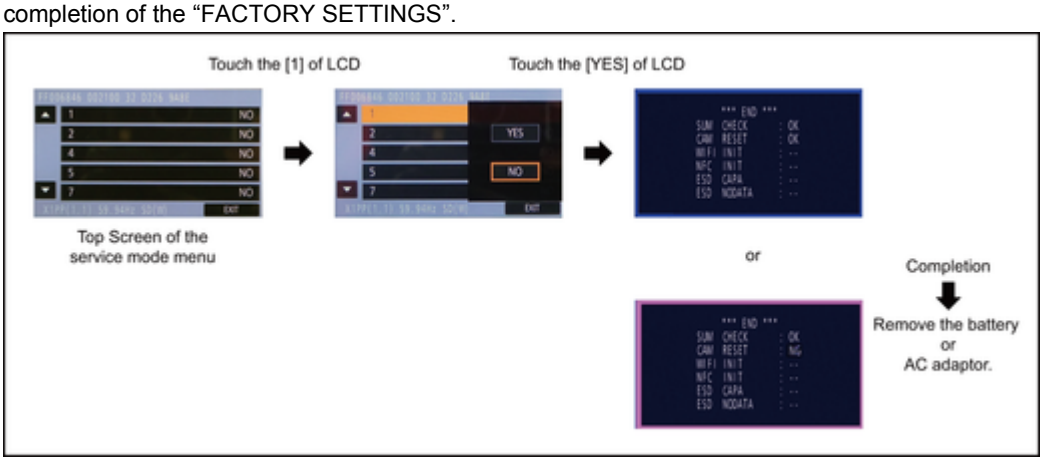

10.2 What Is The Factory Settings?

The factory settings clean up and/or refresh the following settings.

1. Setting Values of menu.
2. Clear the time and date setting.
3. Initialize the Zoom position. (set to wide-angle end)

The shipment setting position of switches and lever:
(After the factory settings, set the switches and lever as following table.)

Name	Setting position
Lens cover open/close lever	Close
ND filter switch	[Off] position
FOCUS ASSIST button	[A] position
Power switch	[Off] position
INPUT1	[LINE] position
INPUT2	[LINE] position
SUB S/S COVER	Close
CH1 SELECT	[INT (L)] position
CH2 SELECT	[INT (R)] position
Eyepiece corrector lever	[Shortsighted End] position (Grip Side)
AUDIO LEVEL CH1/AUDIO LEVEL CH2 knobs	Center position
Auto/Manual switch	[AUTO] position

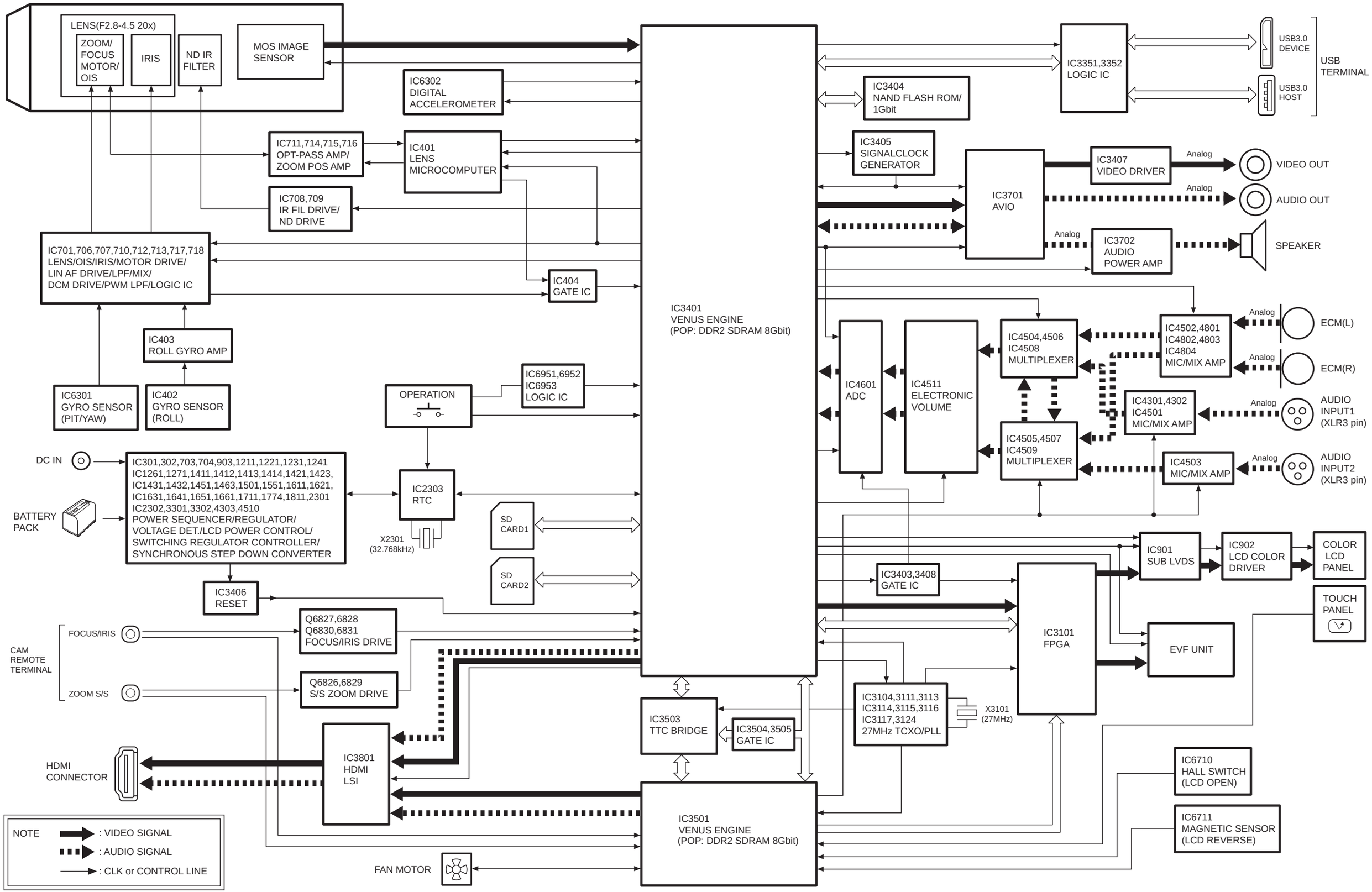

HC-X1 OVERALL BLOCK DIAGRAM

Please check the Fuse Resistor when an output voltage does not output.

⚠ FUSE RESISTOR: (R1171/R2308)

⚠ IC PROTECTOR: (IP1501/IP6851)

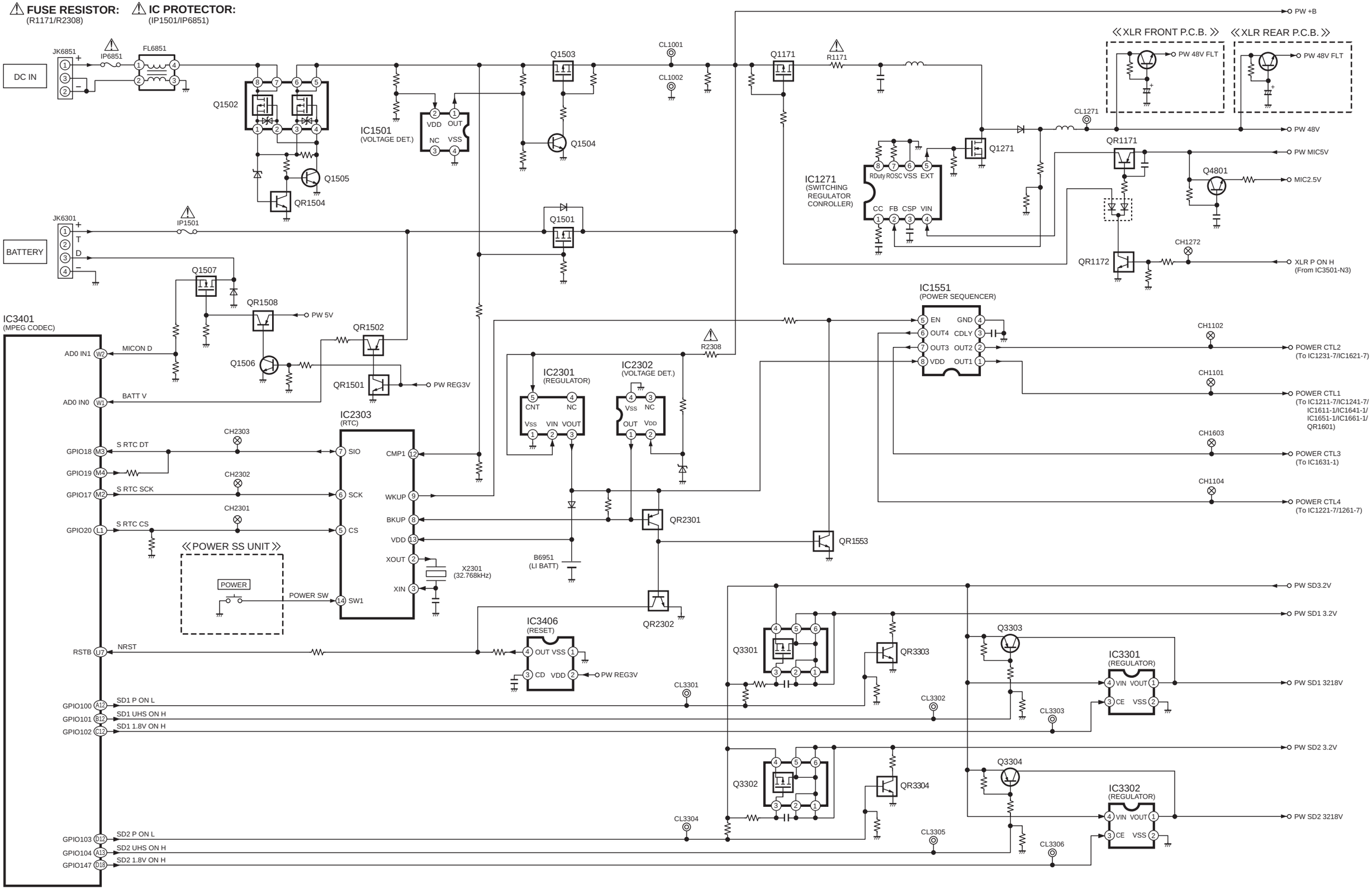

HC-X1 POWER SUPPLY CIRCUIT(1) BLOCK DIAGRAM

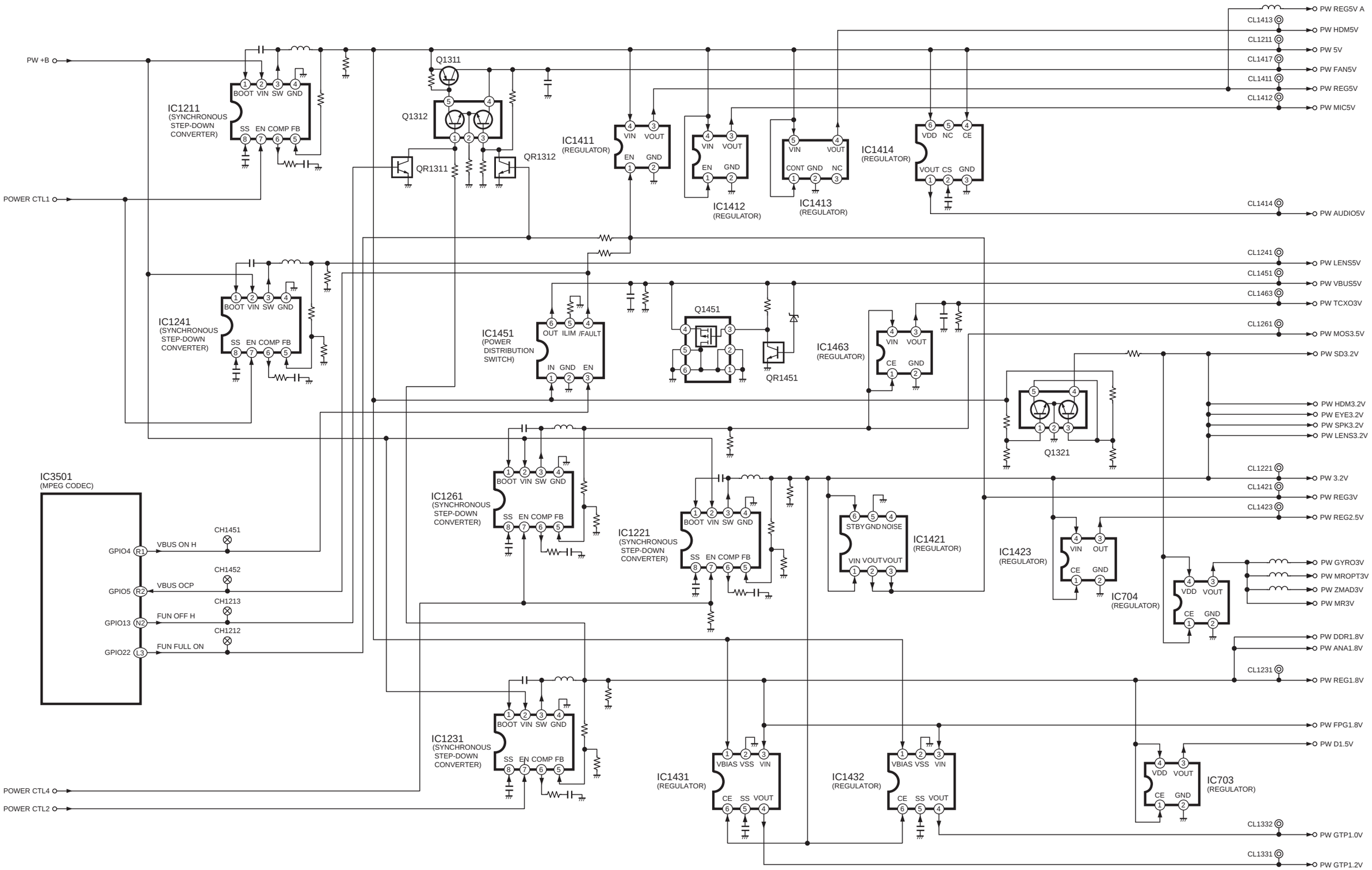

HC-X1 POWER SUPPLY CIRCUIT(2) BLOCK DIAGRAM

Please check the Fuse Resistor when an output voltage does not output.

⚠ **FUSE RESISTOR:**
(R1701/R1801)

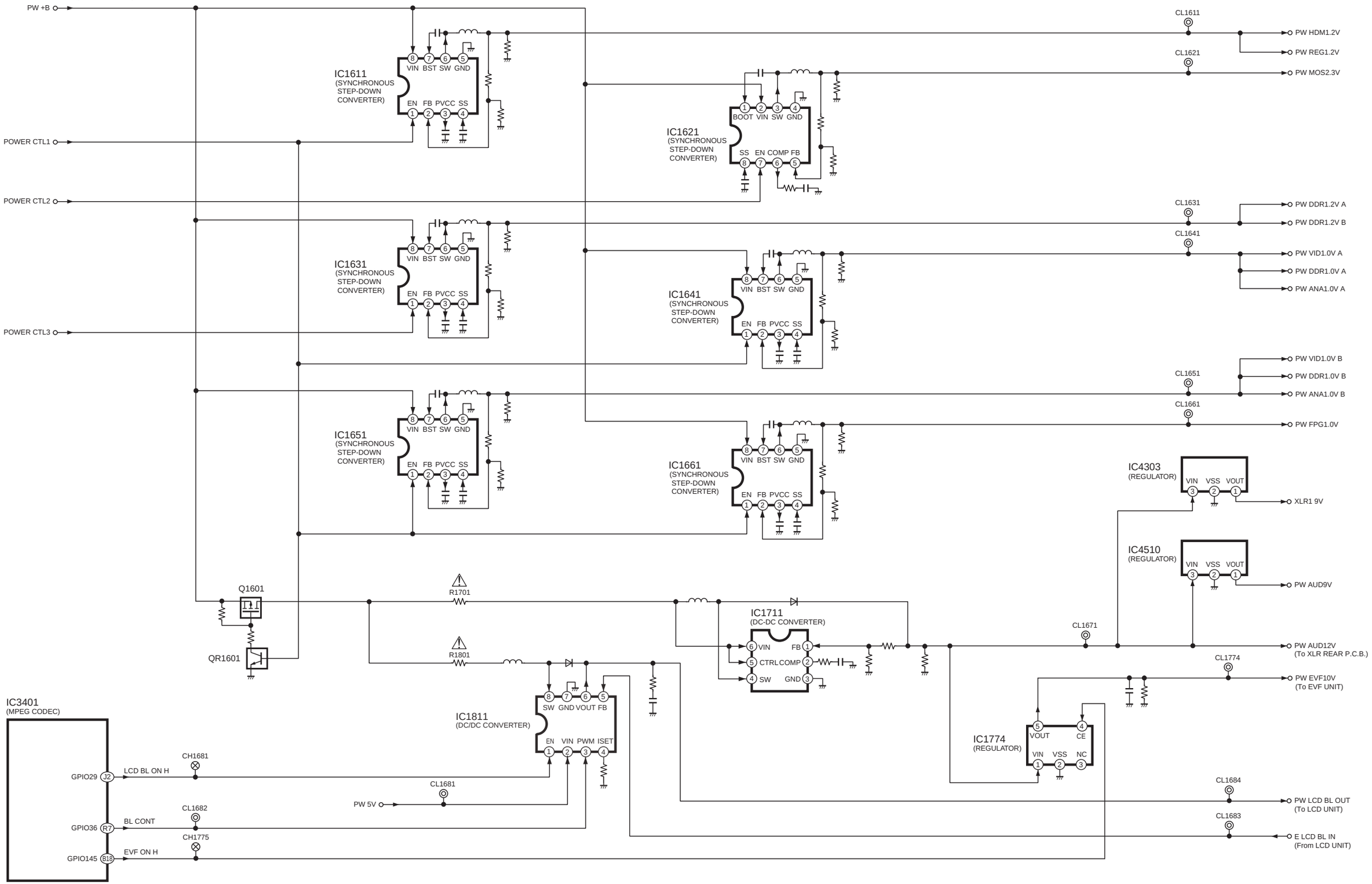

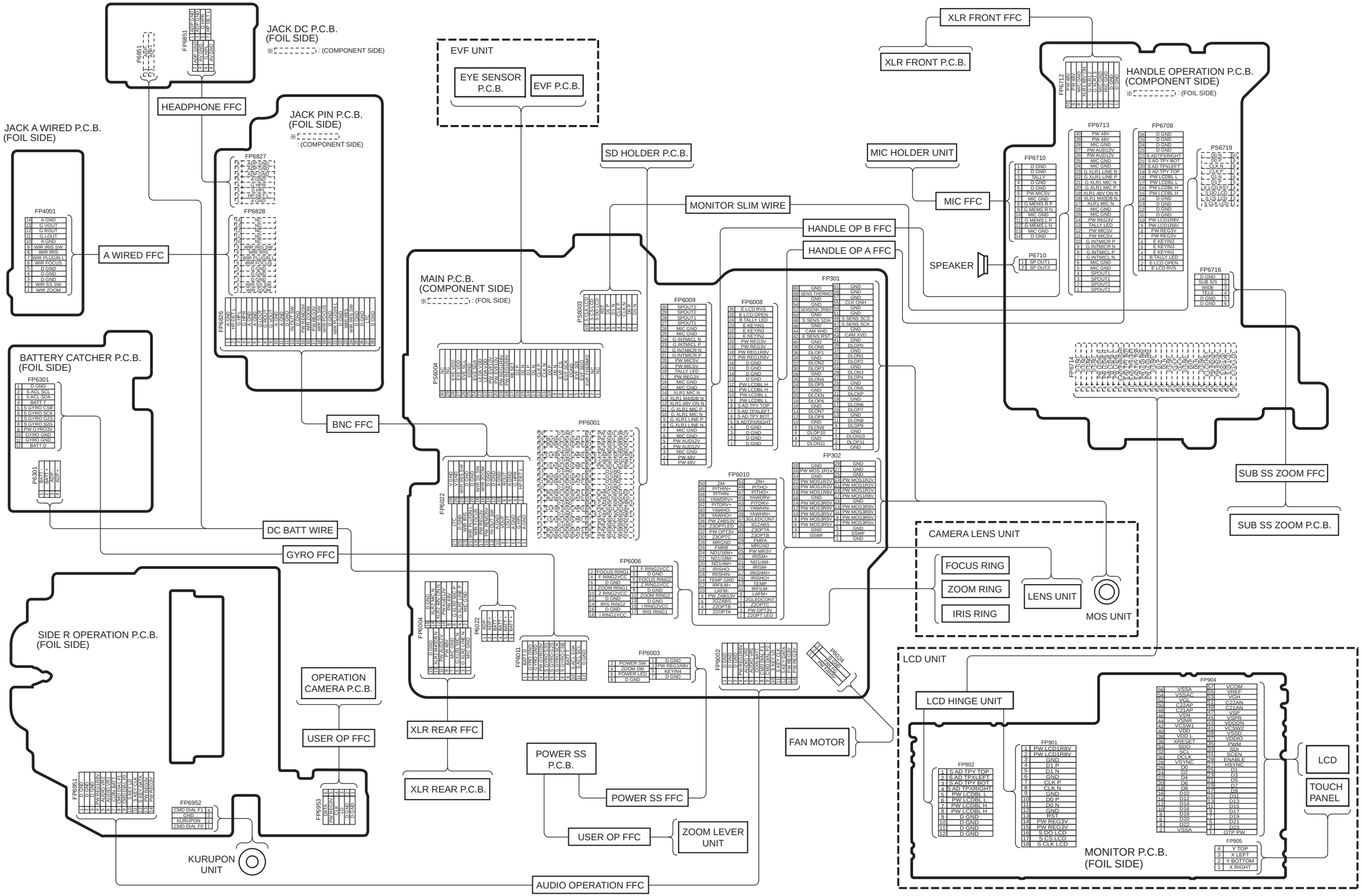

HC-X1 INTERCONNECTION DIAGRAM

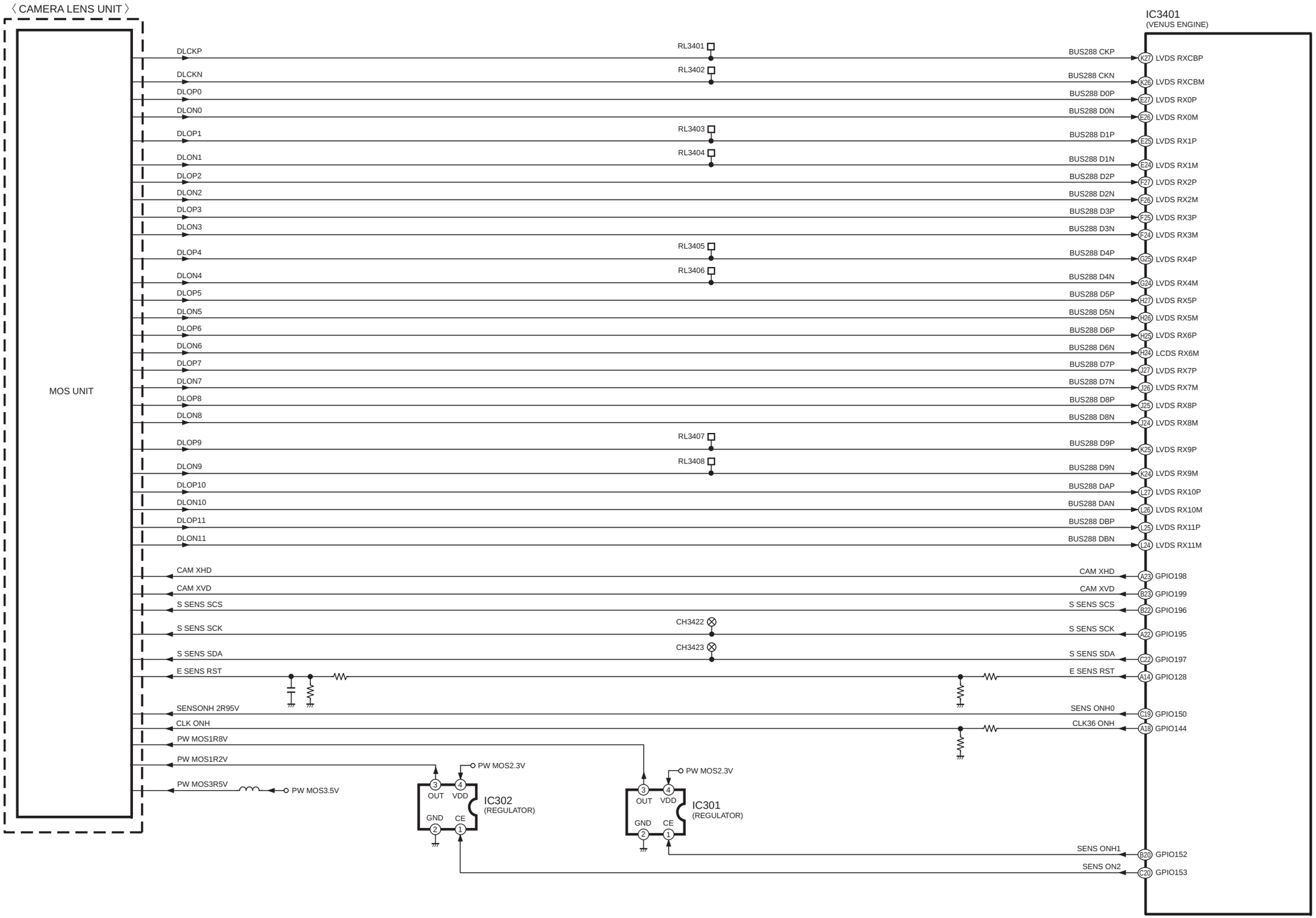
〈CAMERA LENS UNIT〉
MOS UNIT
IC3401
(VENUS ENGINE)
DLCKP
DLCKN
DLOP0
DLON0
DLOP1
DLON1
DLOP2
DLON2
DLOP3
DLON3
DLOP4
DLON4
DLOP5
DLON5
DLOP6
DLON6
DLOP7
DLON7
DLOP8
DLON8
DLOP9
DLON9
DLOP10
DLON10
DLOP11
DLON11
CAM XHD
CAM XVD
S SENS SCS
S SENS SCK
S SENS SDA
E SENS RST
SENSONH 2R95V
CLK ONH
PW MOS1R8V
PW MOS1R2V
PW MOS3R5V
PW MOS3.5V
RL3401
RL3402
RL3403
RL3404
RL3405
RL3406
RL3407
RL3408
CH3422
CH3423
PW MOS2.3V
OUT
VDD
GND
CE
IC302
(REGULATOR)
IC301
(REGULATOR)
BUS288 CKP
BUS288 CKN
BUS288 D0P
BUS288 D0N
BUS288 D1P
BUS288 D1N
BUS288 D2P
BUS288 D2N
BUS288 D3P
BUS288 D3N
BUS288 D4P
BUS288 D4N
BUS288 D5P
BUS288 D5N
BUS288 D6P
BUS288 D6N
BUS288 D7P
BUS288 D7N
BUS288 D8P
BUS288 D8N
BUS288 D9P
BUS288 D9N
BUS288 DAP
BUS288 DAN
BUS288 DBP
BUS288 DBN
CAM XHD
CAM XVD
S SENS SCS
S SENS SCK
S SENS SDA
E SENS RST
SENS ONH0
CLK36 ONH
SENS ONH1
SENS ON2
K27 LVDS RXCBP
K26 LVDS RXCBM
E27 LVDS RX0P
E26 LVDS RX0M
E25 LVDS RX1P
E24 LVDS RX1M
F27 LVDS RX2P
F26 LVDS RX2M
F25 LVDS RX3P
F24 LVDS RX3M
G25 LVDS RX4P
G24 LVDS RX4M
H27 LVDS RX5P
H26 LVDS RX5M
H25 LVDS RX6P
H24 LCDS RX6M
J27 LVDS RX7P
J26 LVDS RX7M
J25 LVDS RX8P
J24 LVDS RX8M
K25 LVDS RX9P
K24 LVDS RX9M
L27 LVDS RX10P
L26 LVDS RX10M
L25 LVDS RX11P
L24 LVDS RX11M
A23 GPIO198
B23 GPIO199
B22 GPIO196
A22 GPIO195
C22 GPIO197
A14 GPIO128
C19 GPIO150
A18 GPIO144
B20 GPIO152
C20 GPIO153

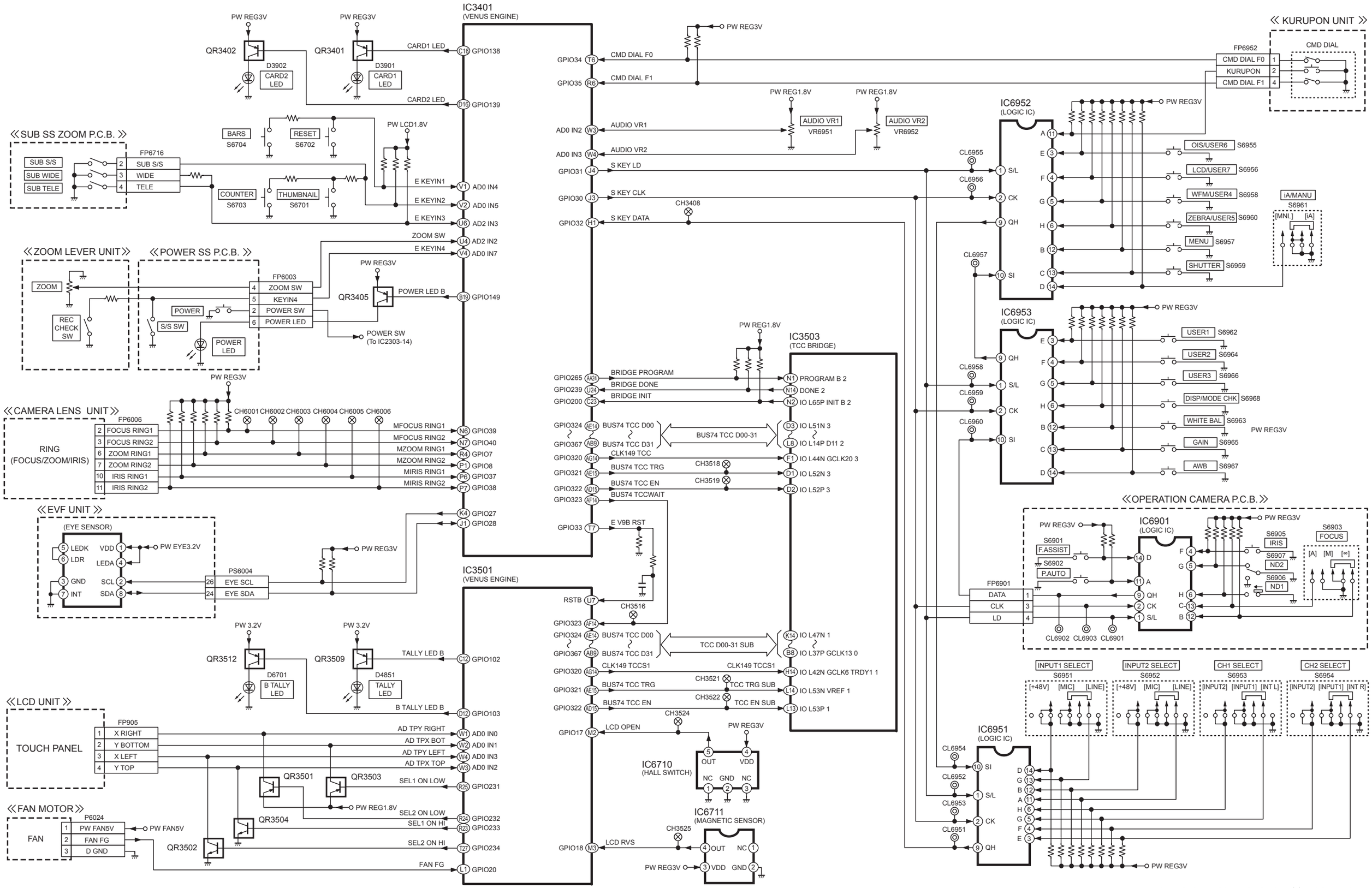

HC-X1 SYSTEM CONTROL CIRCUIT(1) BLOCK DIAGRAM

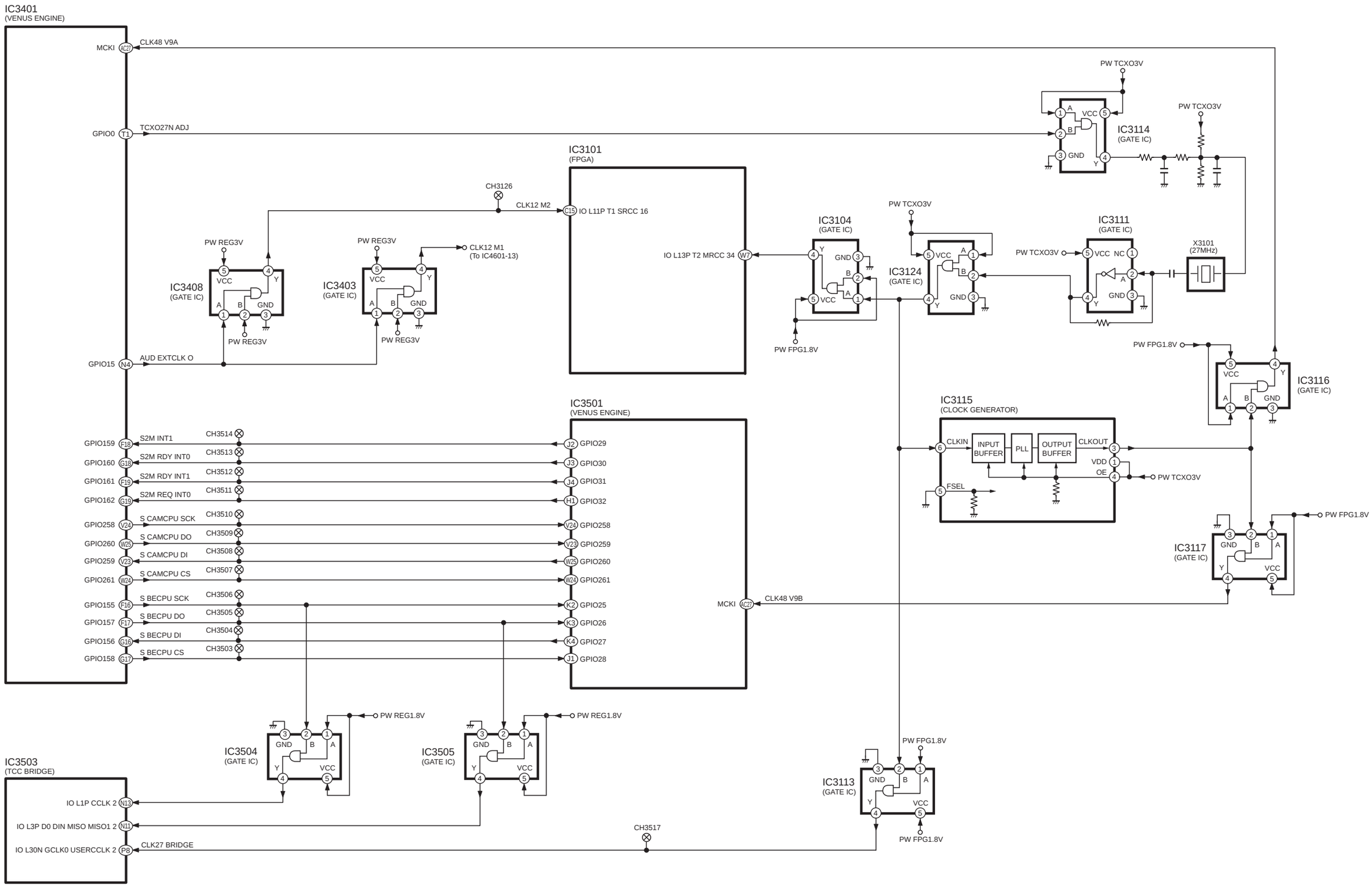

HC-X1 SYSTEM CONTROL CIRCUIT(2) BLOCK DIAGRAM

Please check the Fuse Resistor when an output voltage does not output.

⚠ **FUSE RESISTOR:**
(R6003)

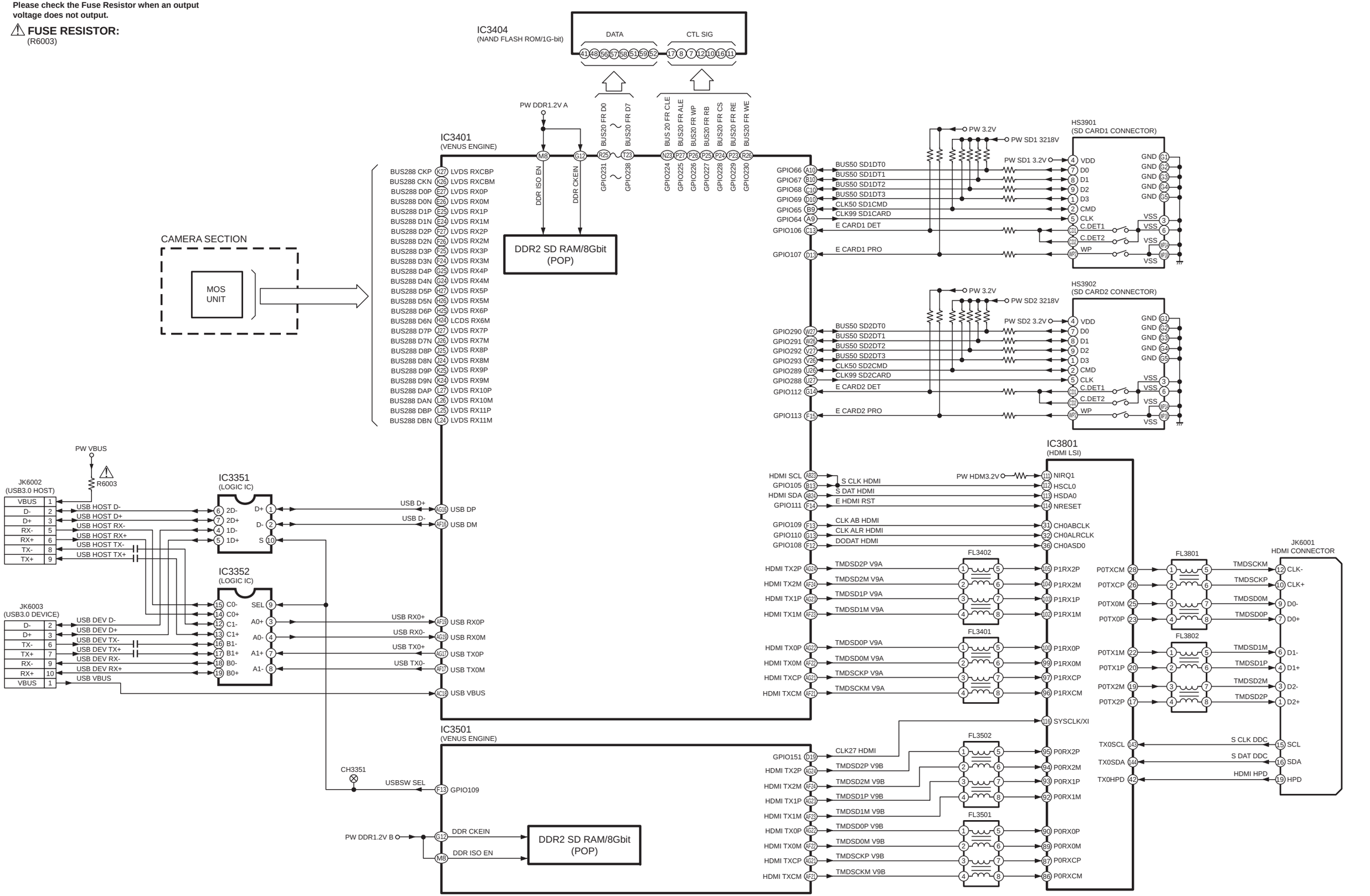

HC-X1 VIDEO/AUDIO PROCESS(1) CIRCUIT BLOCK DIAGRAM

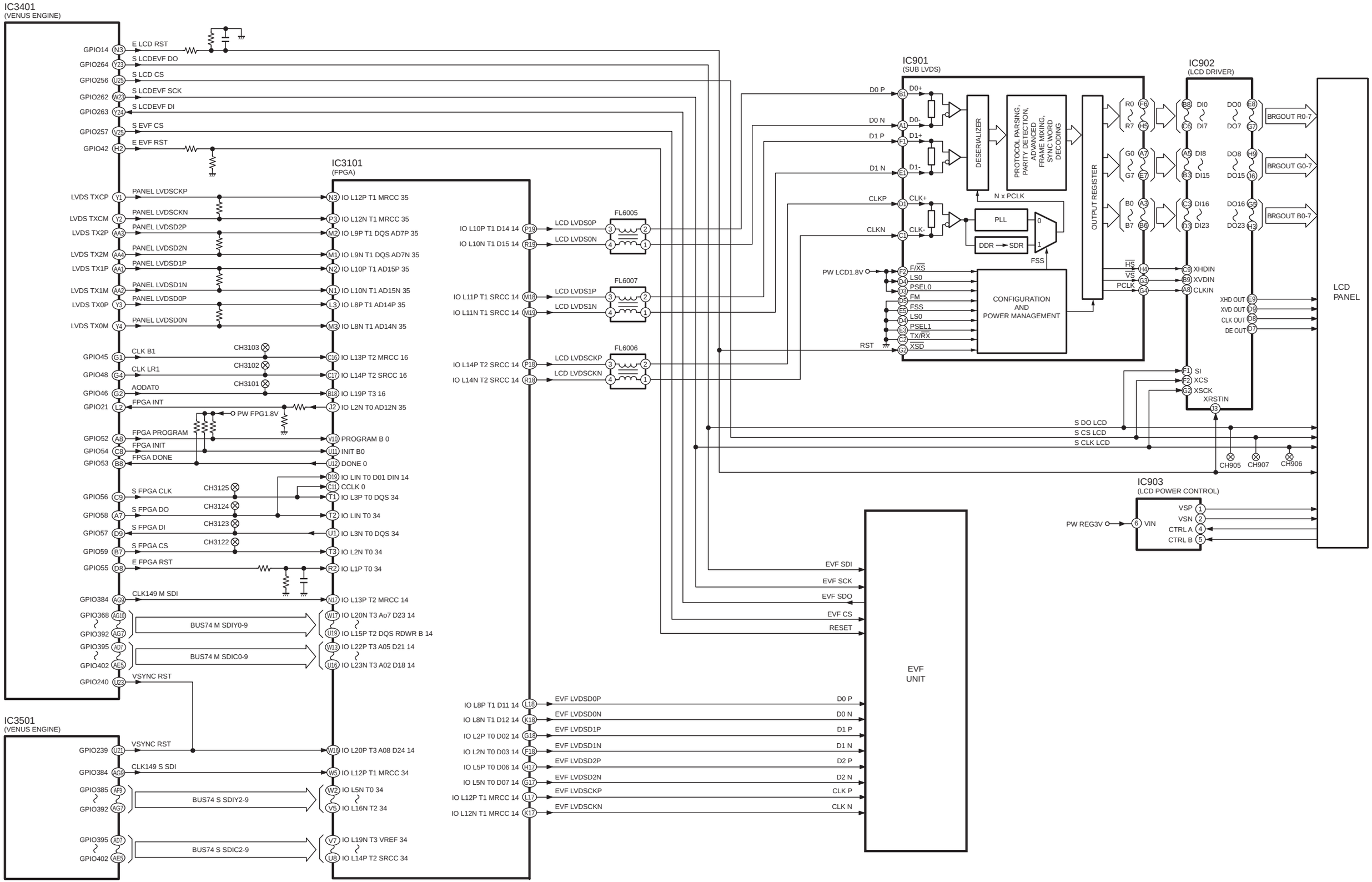
IC3401
(VENUS ENGINE)
GPIO14 N3 E LCD RST
GPIO264 Y23 S LCDEVF DO
GPIO256 U25 S LCD CS
GPIO262 W23 S LCDEVF SCK
GPIO263 Y24 S LCDEVF DI
GPIO257 V25 S EVF CS
GPIO42 H2 E EVF RST
LVDS TXCP Y1 PANEL LVDSCKP
LVDS TXCM Y2 PANEL LVDSCKN
LVDS TX2P AA3 PANEL LVDSD2P
LVDS TX2M AA4 PANEL LVDSD2N
LVDS TX1P AA1 PANEL LVDSD1P
LVDS TX1M AA2 PANEL LVDSD1N
LVDS TX0P Y3 PANEL LVDSD0P
LVDS TX0M Y4 PANEL LVDSD0N
GPIO45 G1 CLK B1 CH3103
GPIO48 G4 CLK LR1 CH3102
GPIO46 G2 AODAT0 CH3101
GPIO21 L2 FPGA INT
PW FPG1.8V
GPIO52 A8 FPGA PROGRAM
GPIO54 C8 FPGA INIT
GPIO53 B8 FPGA DONE
GPIO56 C9 S FPGA CLK CH3125
GPIO58 A7 S FPGA DO CH3124
GPIO57 D9 S FPGA DI CH3123
GPIO59 B7 S FPGA CS CH3122
GPIO55 D8 E FPGA RST
GPIO384 AG9 CLK149 M SDI
GPIO368 AG10 ~ GPIO392 AG7 BUS74 M SDIY0-9
GPIO395 AD7 ~ GPIO402 AE5 BUS74 M SDIC0-9
GPIO240 U23 VSYNC RST
IC3101
(FPGA)
N3 IO L12P T1 MRCC 35
P3 IO L12N T1 MRCC 35
M2 IO L9P T1 DQS AD7P 35
M1 IO L9N T1 DQS AD7N 35
N2 IO L10P T1 AD15P 35
N1 IO L10N T1 AD15N 35
L3 IO L8P T1 AD14P 35
M3 IO L8N T1 AD14N 35
C16 IO L13P T2 MRCC 16
C17 IO L14P T2 SRCC 16
B18 IO L19P T3 16
J2 IO L2N T0 AD12N 35
V10 PROGRAM B 0
U11 INIT B0
U12 DONE 0
D19 IO LIN T0 D01 DIN 14
C11 CCLK 0
T1 IO L3P T0 DQS 34
T2 IO LIN T0 34
U1 IO L3N T0 DQS 34
T3 IO L2N T0 34
R2 IO L1P T0 34
N17 IO L13P T2 MRCC 14
W17 IO L20N T3 Ao7 D23 14 ~ U19 IO L15P T2 DQS RDWR B 14
W13 IO L22P T3 A05 D21 14 ~ U16 IO L23N T3 A02 D18 14
IO L10P T1 D14 14 P19
IO L10N T1 D15 14 R19
LCD LVDS0P
LCD LVDS0N
FL6005
IO L11P T1 SRCC 14 M18
IO L11N T1 SRCC 14 M19
LCD LVDS1P
LCD LVDS1N
FL6007
IO L14P T2 SRCC 14 P18
IO L14N T2 SRCC 14 R18
LCD LVDSCKP
LCD LVDSCKN
FL6006
IO L8P T1 D11 14 L18
IO L8N T1 D12 14 K18
IO L2P T0 D02 14 G18
IO L2N T0 D03 14 F18
IO L5P T0 D06 14 H17
IO L5N T0 D07 14 G17
IO L12P T1 MRCC 14 L17
IO L12N T1 MRCC 14 K17
EVF LVDSD0P
EVF LVDSD0N
EVF LVDSD1P
EVF LVDSD1N
EVF LVDSD2P
EVF LVDSD2N
EVF LVDSCKP
EVF LVDSCKN
IC3501
(VENUS ENGINE)
GPIO239 U21 VSYNC RST
GPIO384 AG9 CLK149 S SDI
GPIO385 AF9 ~ GPIO392 AG7 BUS74 S SDIY2-9
GPIO395 AD7 ~ GPIO402 AE5 BUS74 S SDIC2-9
W16 IO L20P T3 A08 D24 14
W5 IO L12P T1 MRCC 34
W2 IO L5N T0 34
V5 IO L16N T2 34
V7 IO L19N T3 VREF 34
U8 IO L14P T2 SRCC 34
IC901
(SUB LVDS)
D0 P B1 D0+
D0 N A1 D0-
D1 P F1 D1+
D1 N E1 D1-
CLKP D1 CLK+
CLKN C1 CLK-
DESERIALIZER
PROTOCOL PARSING, PARITY DETECTION, ADVANCED FRAME MIXING, SYNC WORD DECODING
N x PCLK
PLL
DDR → SDR
FSS
OUTPUT REGISTER
PW LCD1.8V
F/XS F2
LS0 D4
PSEL0 D3
FM D5
FSS E5
LS0 D4
PSEL1 E3
TX/RX C2
XSD G2
RST
CONFIGURATION AND POWER MANAGEMENT
IC902
(LCD DRIVER)
R0 F6 ~ R7 H5
G0 A7 ~ G7 E7
B0 A3 ~ B7 B6
B8 DI0 ~ C6 DI7
A5 DI8 ~ B3 DI15
C3 DI16 ~ D3 DI23
DO0 E8 ~ DO7 G7
DO8 H9 ~ DO15 J6
DO16 G5 ~ DO23 H3
BRGOUT R0-7
BRGOUT G0-7
BRGOUT B0-7
HS H4
VS G3
PCLK G4
C9 XHDIN
B9 XVDIN
A8 CLKIN
XHD OUT E9
XVD OUT D9
CLK OUT D8
DE OUT D7
F1 SI
F2 XCS
G2 XSCK
XRSTIN J3
LCD PANEL
S DO LCD
S CS LCD
S CLK LCD
CH905
CH907
CH906
IC903
(LCD POWER CONTROL)
PW REG3V
6 VIN
VSP 1
VSN 2
CTRL A 4
CTRL B 5
EVF SDI
EVF SCK
EVF SDO
EVF CS
RESET
EVF UNIT
D0 P
D0 N
D1 P
D1 N
D2 P
D2 N
CLK P
CLK N

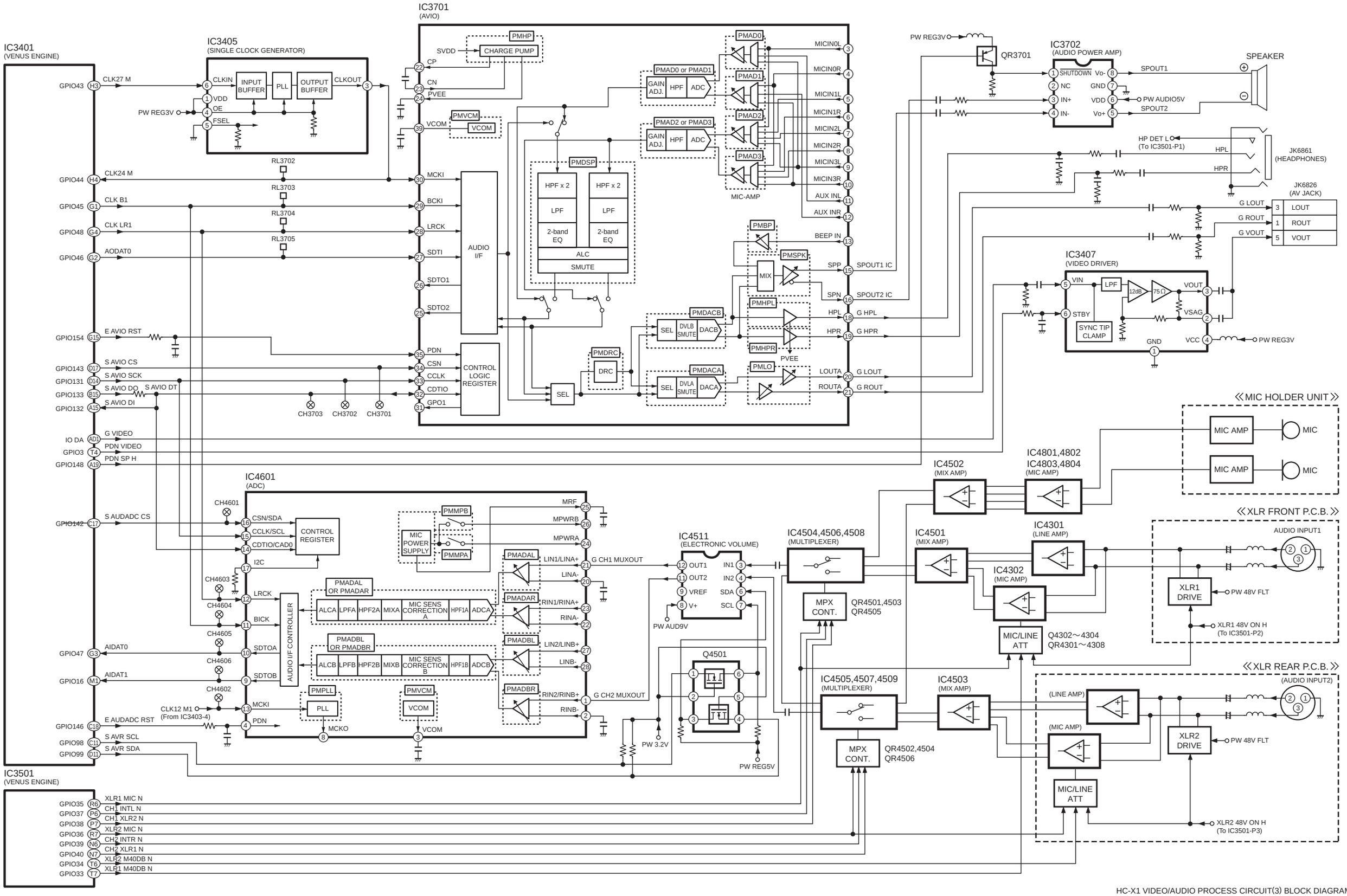

HC-X1 VIDEO/AUDIO PROCESS CIRCUIT(3) BLOCK DIAGRAM

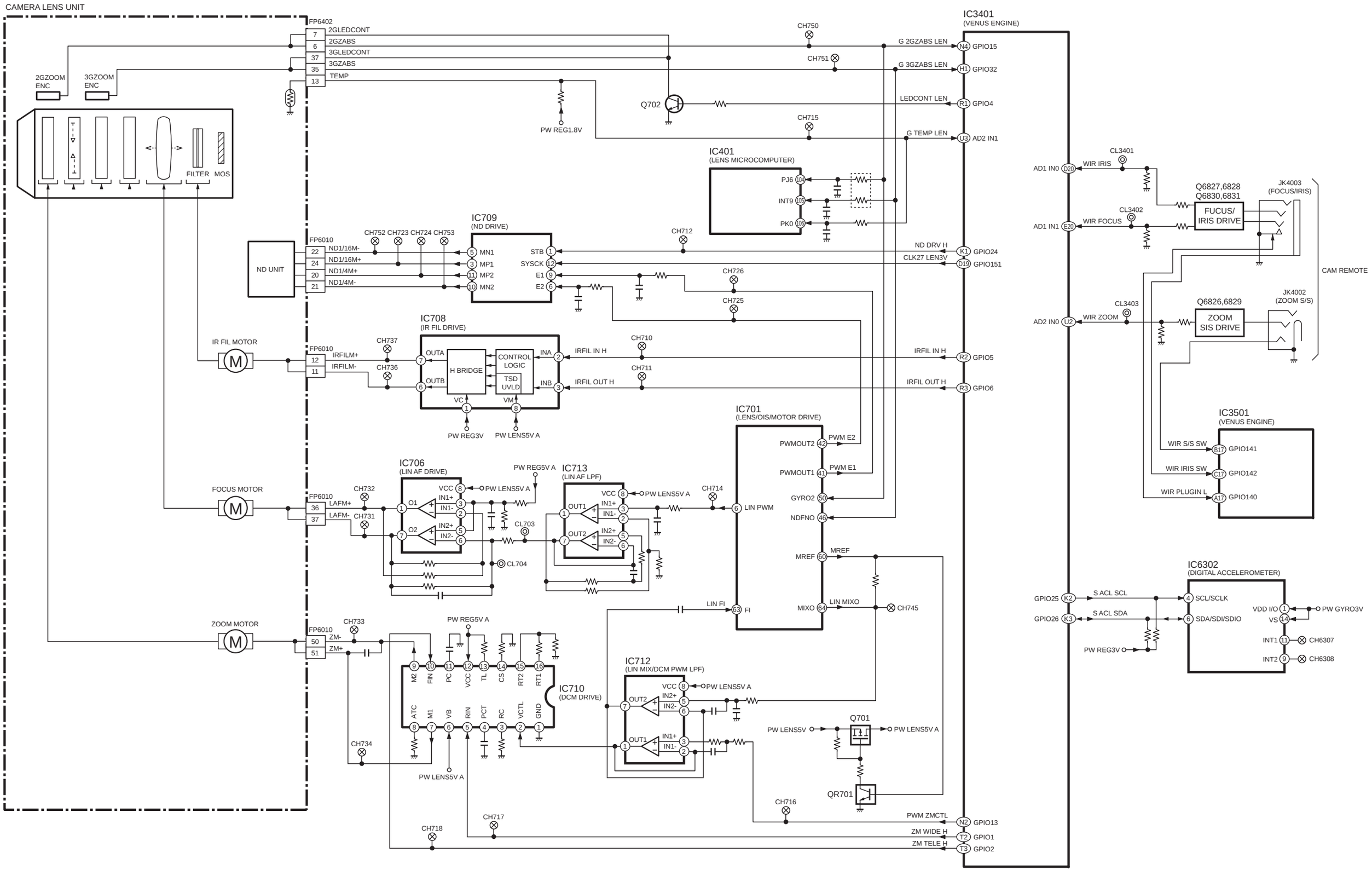

HC-X1 LENS DRIVE CIRCUIT(1) BLOCK DIAGRAM

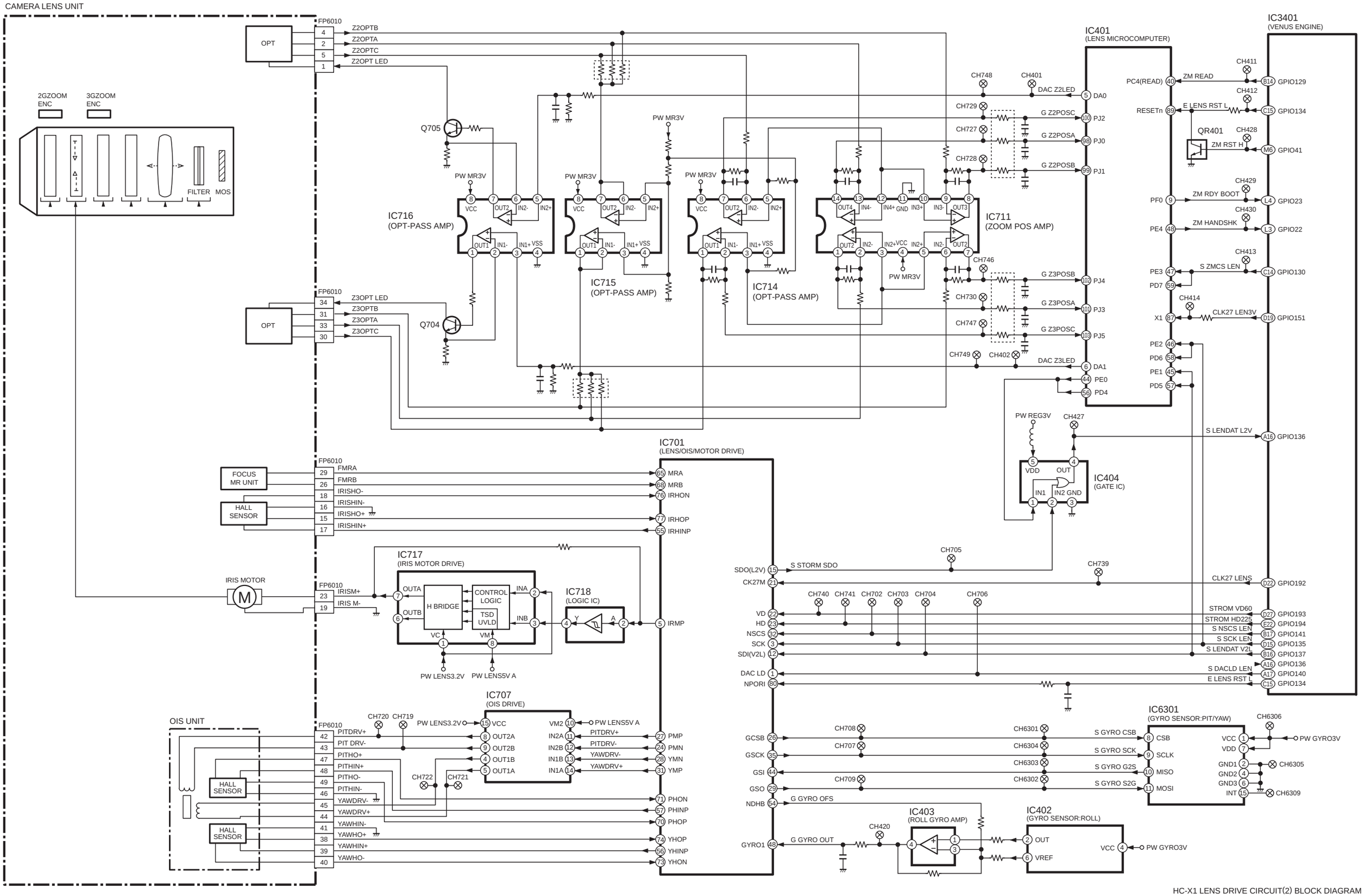

HC-X1 LENS DRIVE CIRCUIT(2) BLOCK DIAGRAM

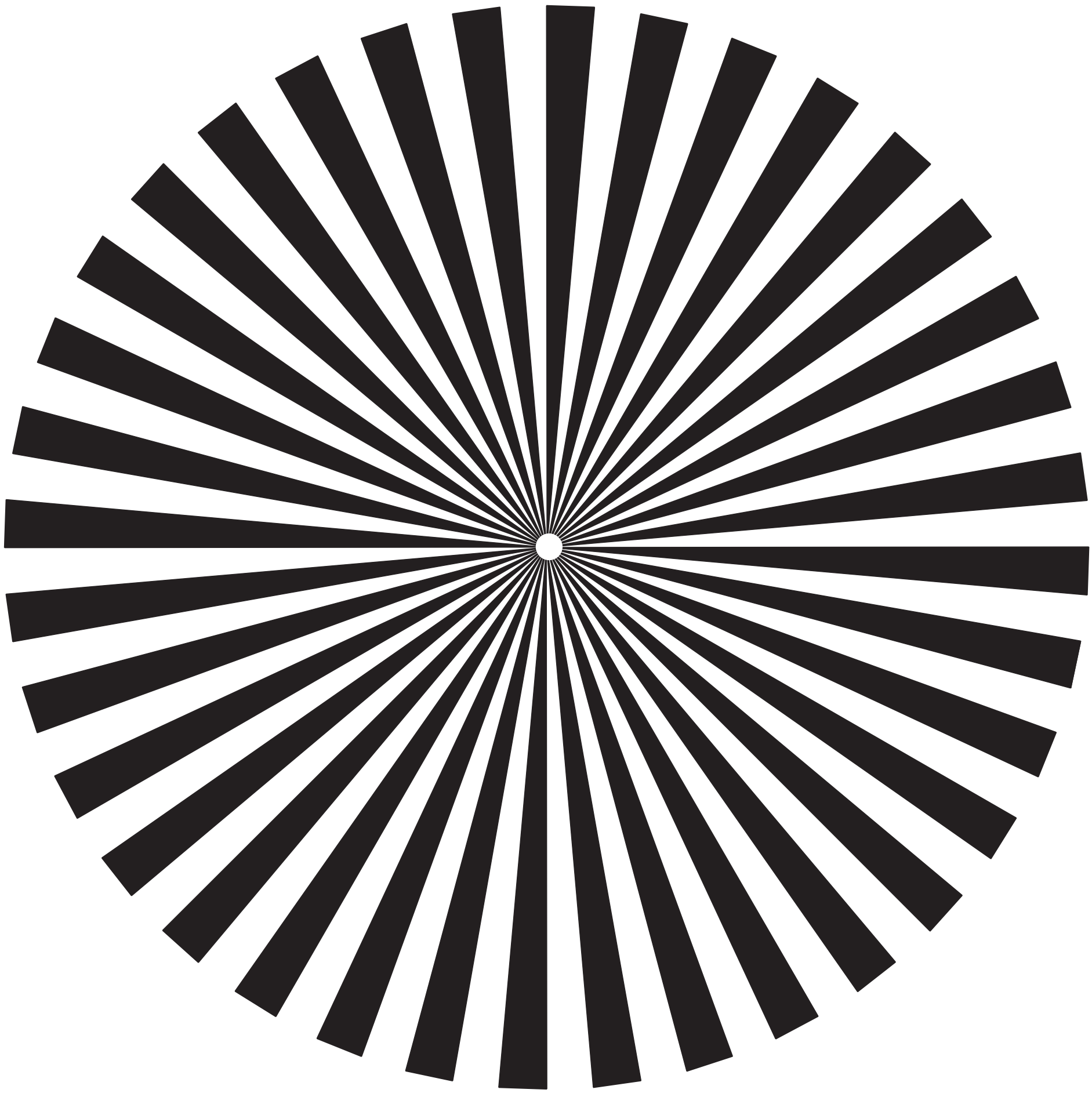

Model No. : HC-X1E/EE/PP/GC/GD Schematic Diagram Note

IMPORTANT SAFETY NOTICE:

COMPONENTS IDENTIFIED WITH THE MARK ⚠ HAVE THE SPECIAL CHARACTERISTICS FOR SAFETY. WHEN REPLACING ANY OF THESE COMPONENTS USE ONLY THE SAME TYPE.

1.Although reference number of the parts is indicated on the P.C.B. drawing and/or schematic diagrams, it is NOT mounted on the P.C.B. when it is displayed with "$" mark.

2.It is only the "Test Round" and no terminal (Pin) is available on the P.C.B. when the TP (Test Point) indicated as "●" mark.

3.Use the parts number indicated on the Replacement Parts List .

4.Indication on Schematic diagrams:

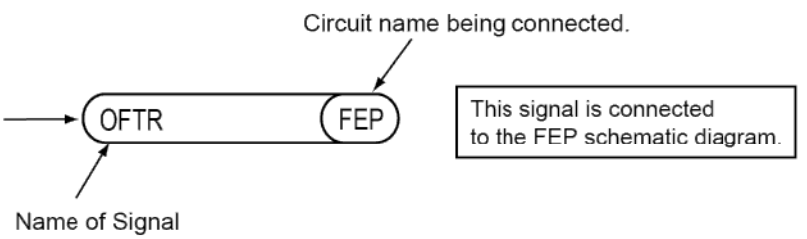

5. It might be taking time for display and/or access of the Schematic Diagrams & P. C. B having the heavy data volume.

Model No. : HC-X1E/EE/PP/GC/GD Parts List Note

Note:
1.* Be sure to make your orders of replacement parts according to this list.
2. IMPORTANT SAFETY NOTICE
Components identified with the mark ⚠ have the special characteristics for safety.
When replacing any of these components, use only the same type.
3. Unless otherwise specified,
All resistors are in OHMS, K=1,000 OHMS. All capacitors are in MICRO-FARADS (uf), P=uuF.
4. The marking (RTL) indicates the retention time is limited for this item. After the discontinuation of this assembly in production, it will no longer be available.

E.S.D. standards for Electrostatically Sensitive Devices, refer to "PREVENTION OF ELECTROSTATIC DISCHARGE (ESD) TO ELECTROSTATICALLY SENSITIVE (ES) DEVICES" section.

Model No. : HC-X1E/EE/PP/GC/GD Main connection (Main P.C.B.)

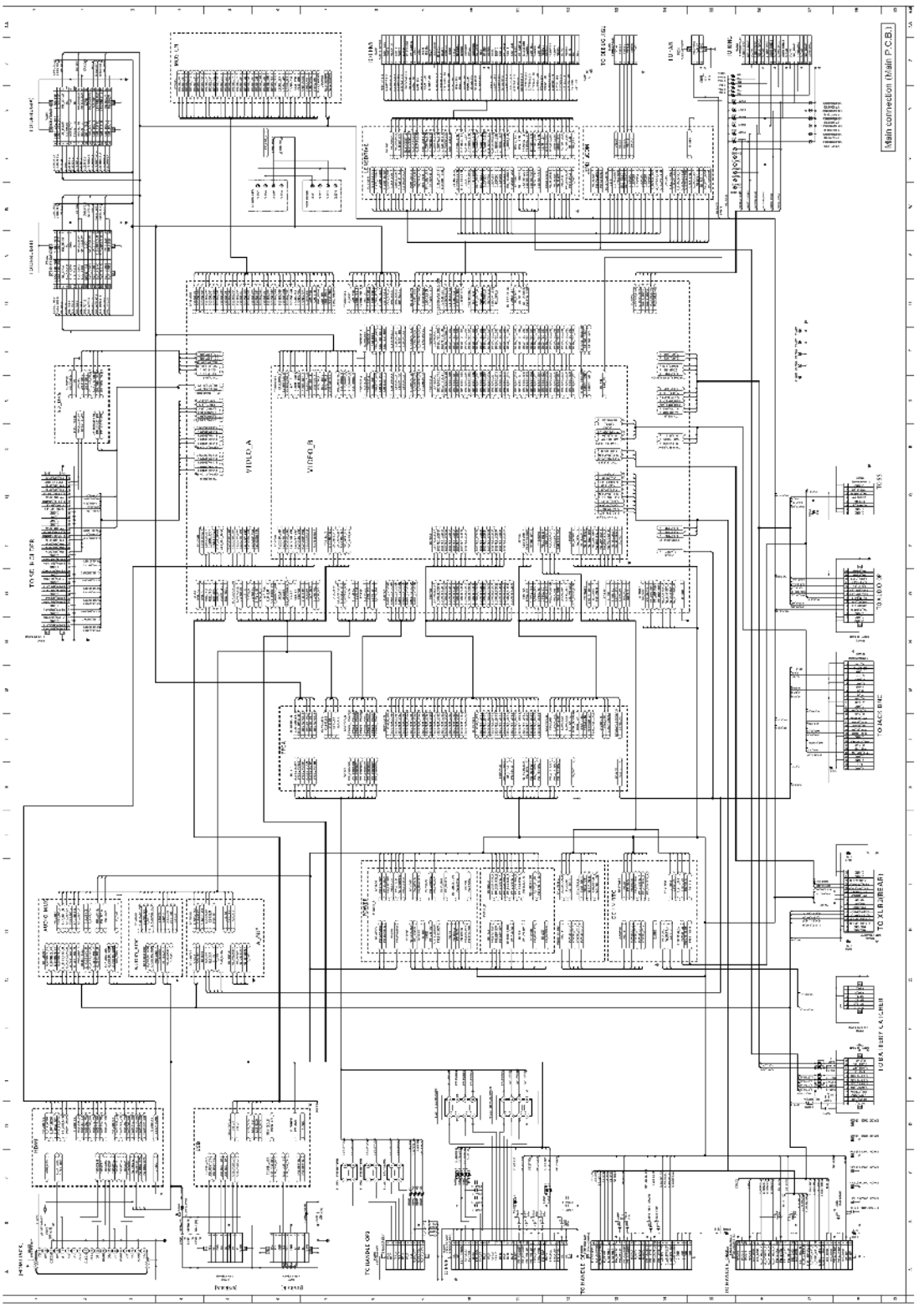

Model No. : HC-X1E/EE/PP/GC/GD Video A (Main P.C.B.)

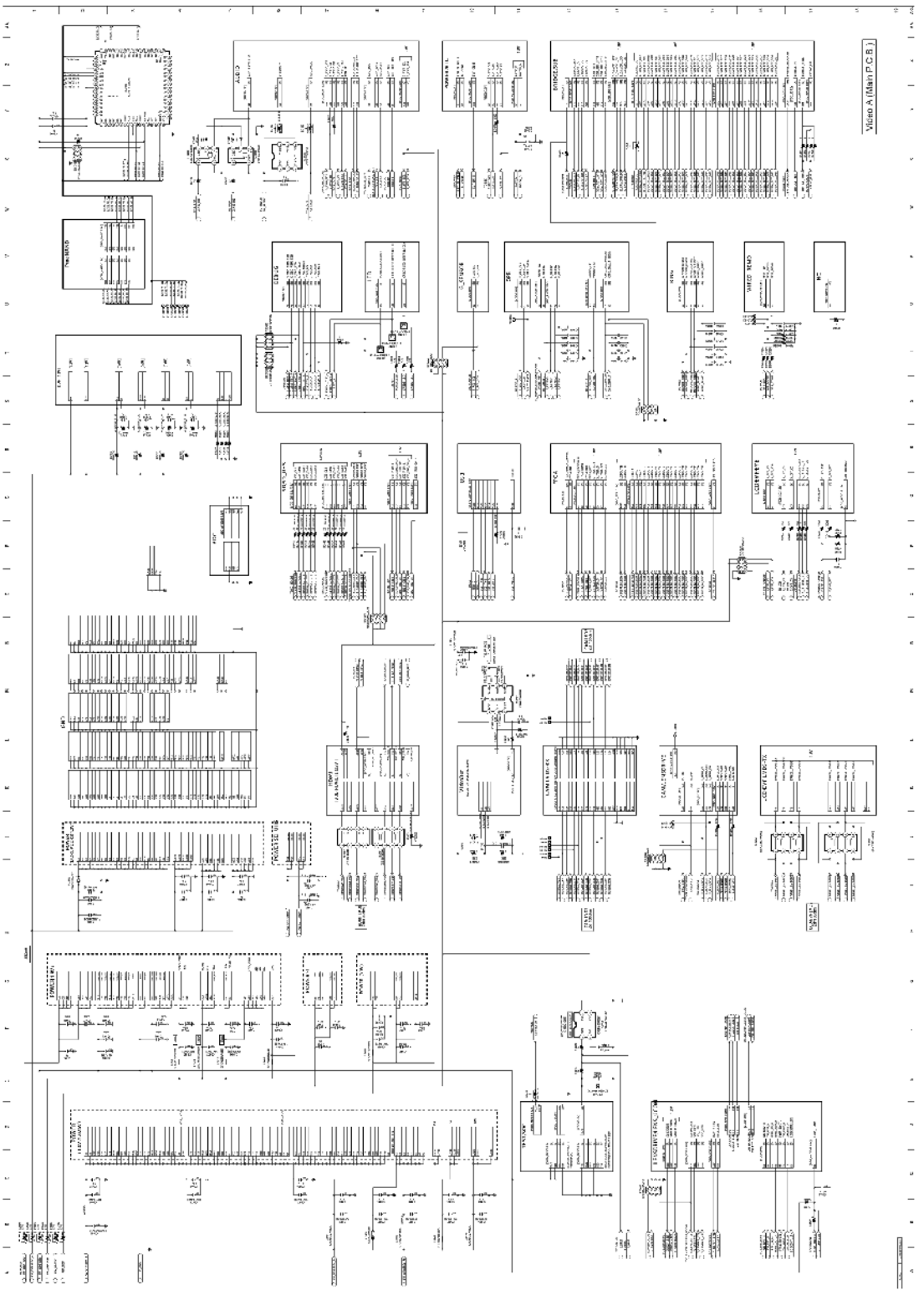

Model No. : HC-X1E/EE/PP/GC/GD Video B (Main P.C.B.)

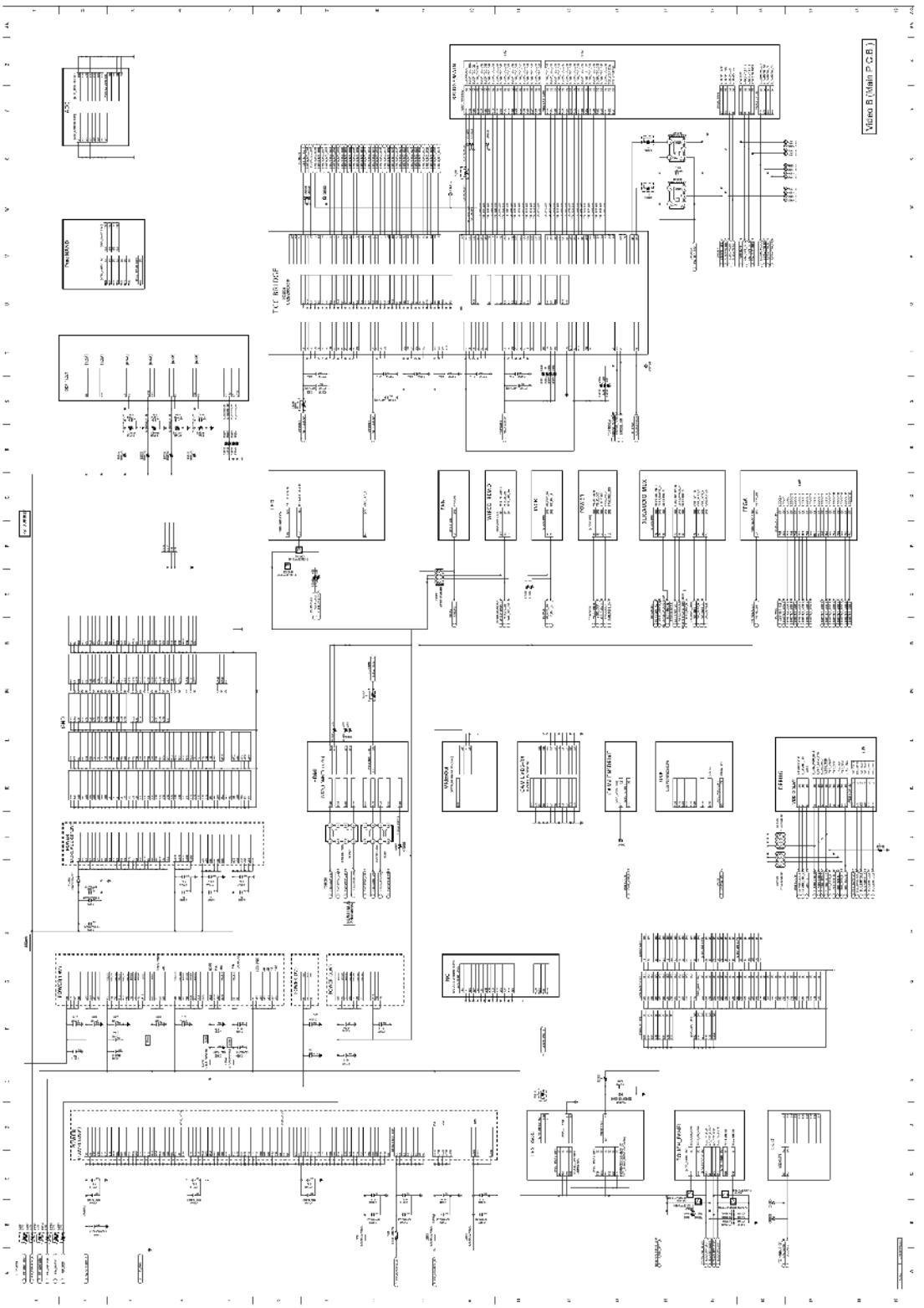

Model No. : HC-X1E/EE/PP/GC/GD Lens Drive (Main P.C.B.)

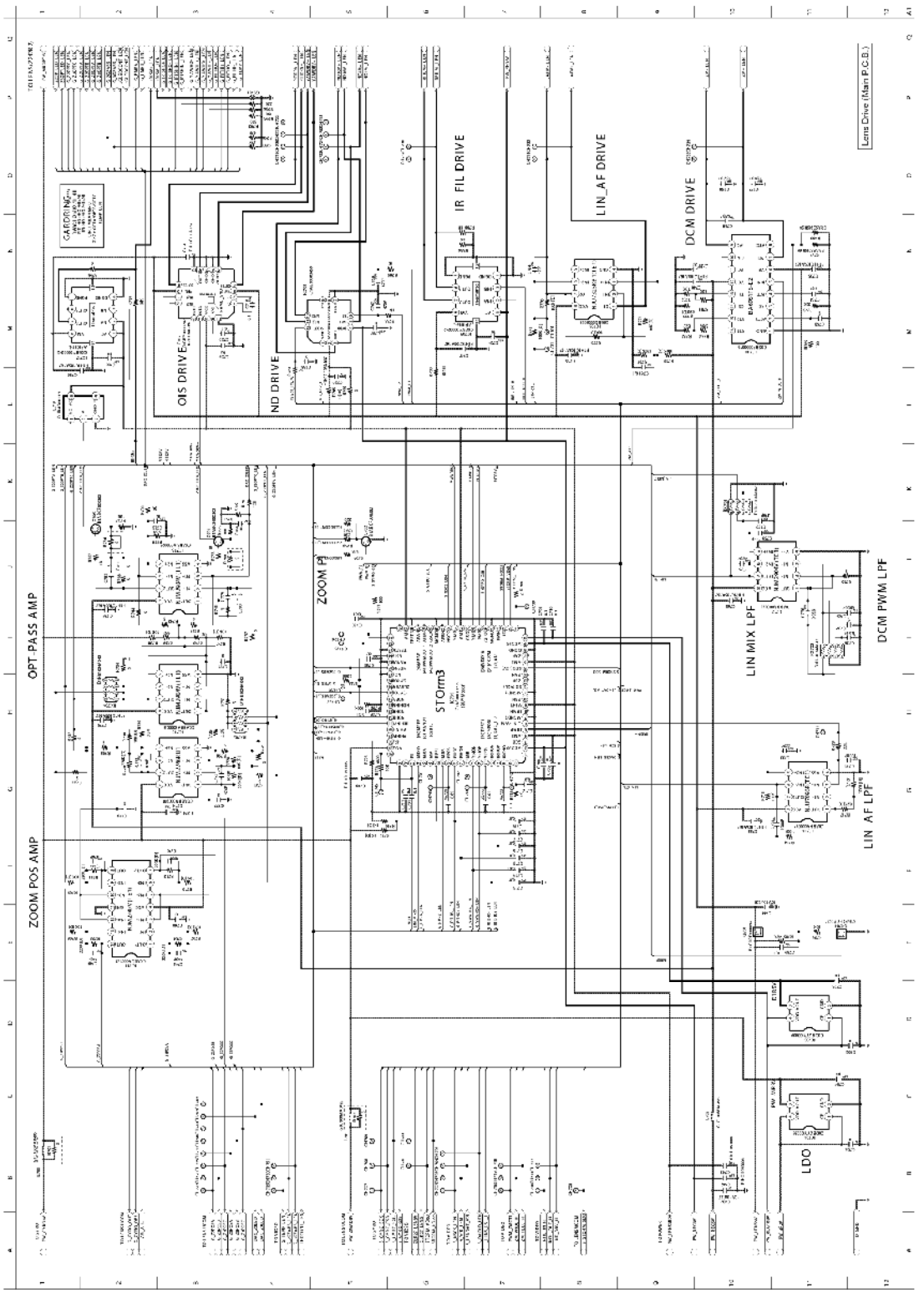

Model No. : HC-X1E/EE/PP/GC/GD Lens uCOM (Main P.C.B.)

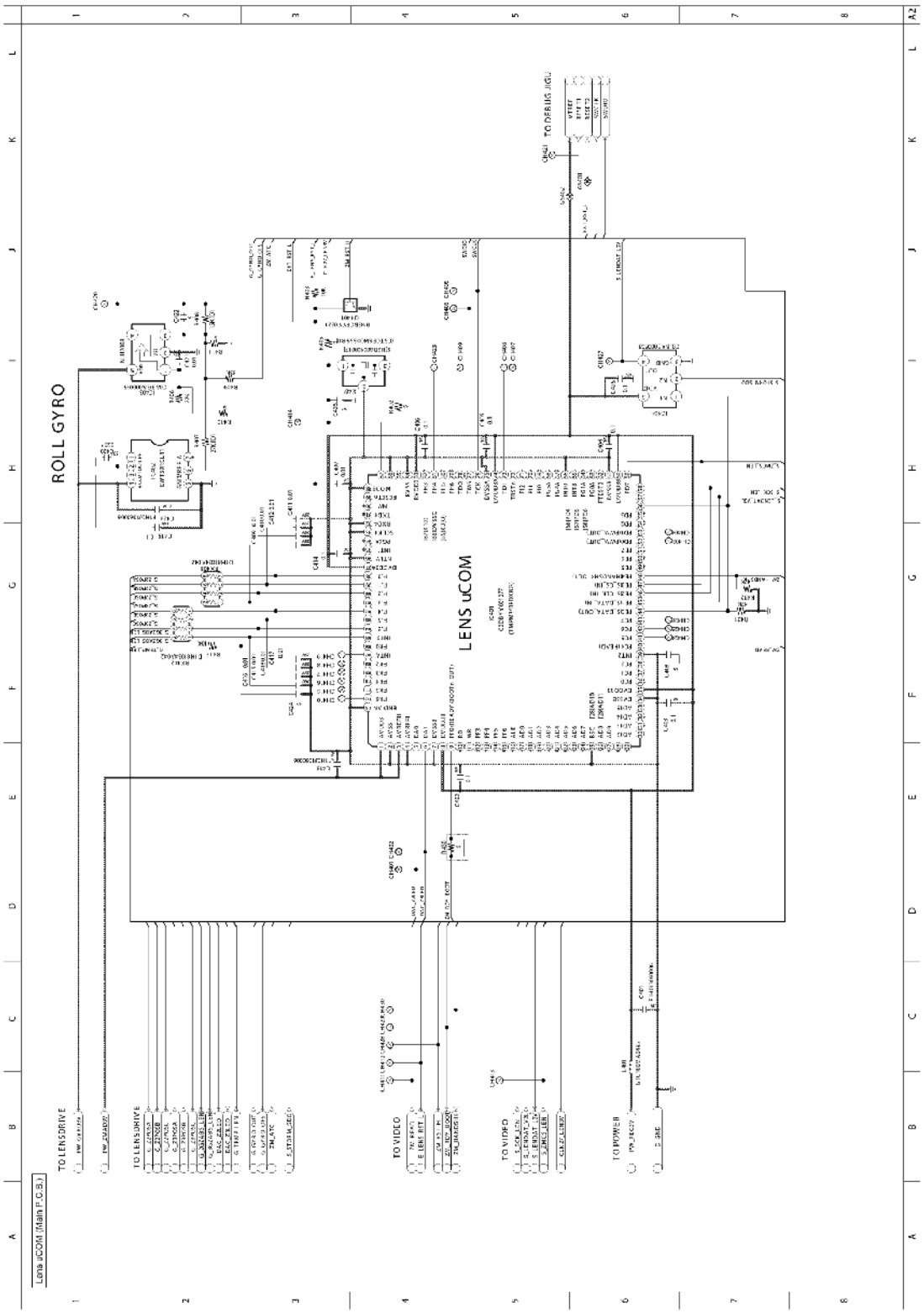

Model No. : HC-X1E/EE/PP/GC/GD AVIO (Main P.C.B.)

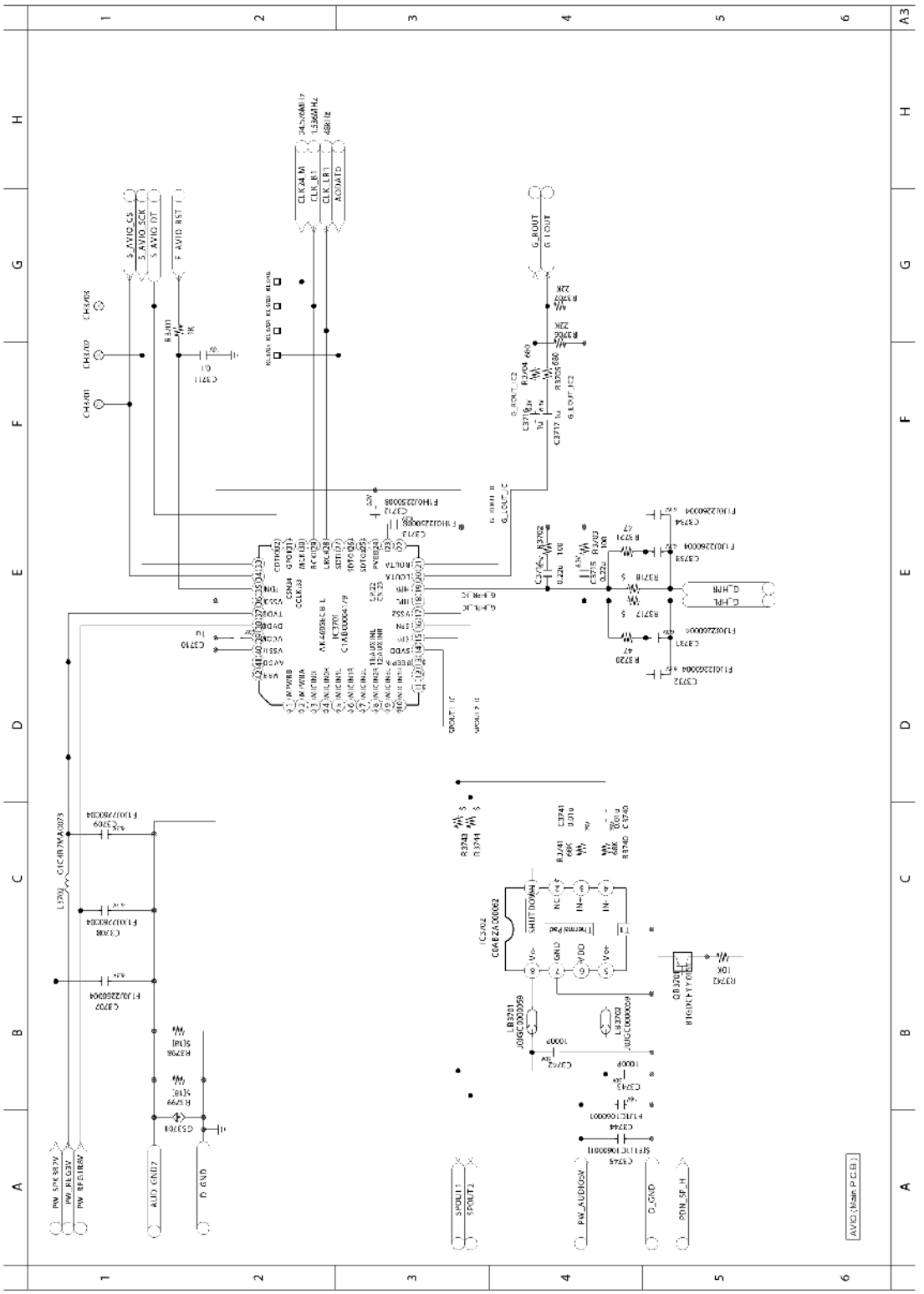

Model No. : HC-X1E/EE/PP/GC/GD Power A (Main P.C.B.)

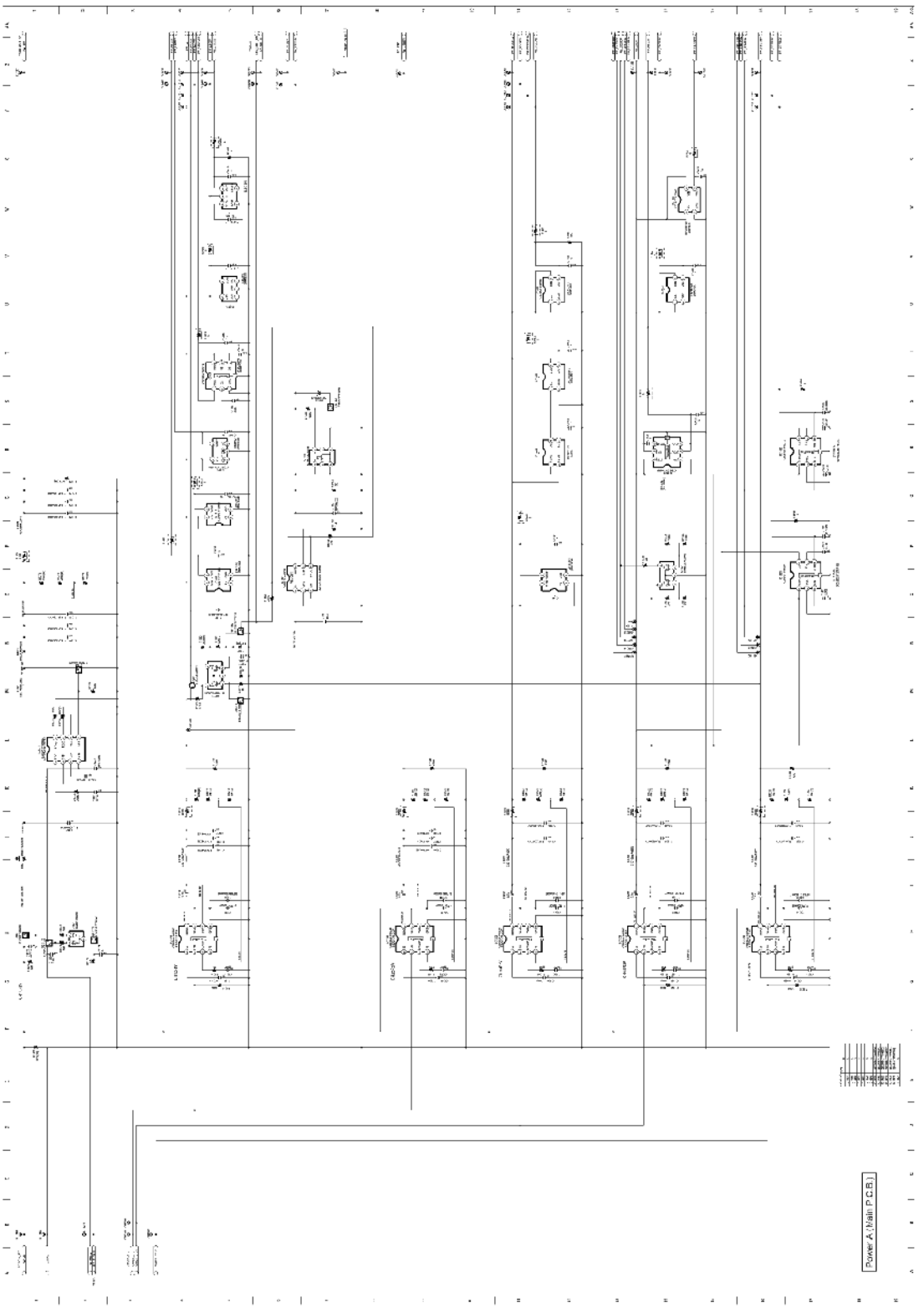

Model No. : HC-X1E/EE/PP/GC/GD Power B (Main P.C.B.)

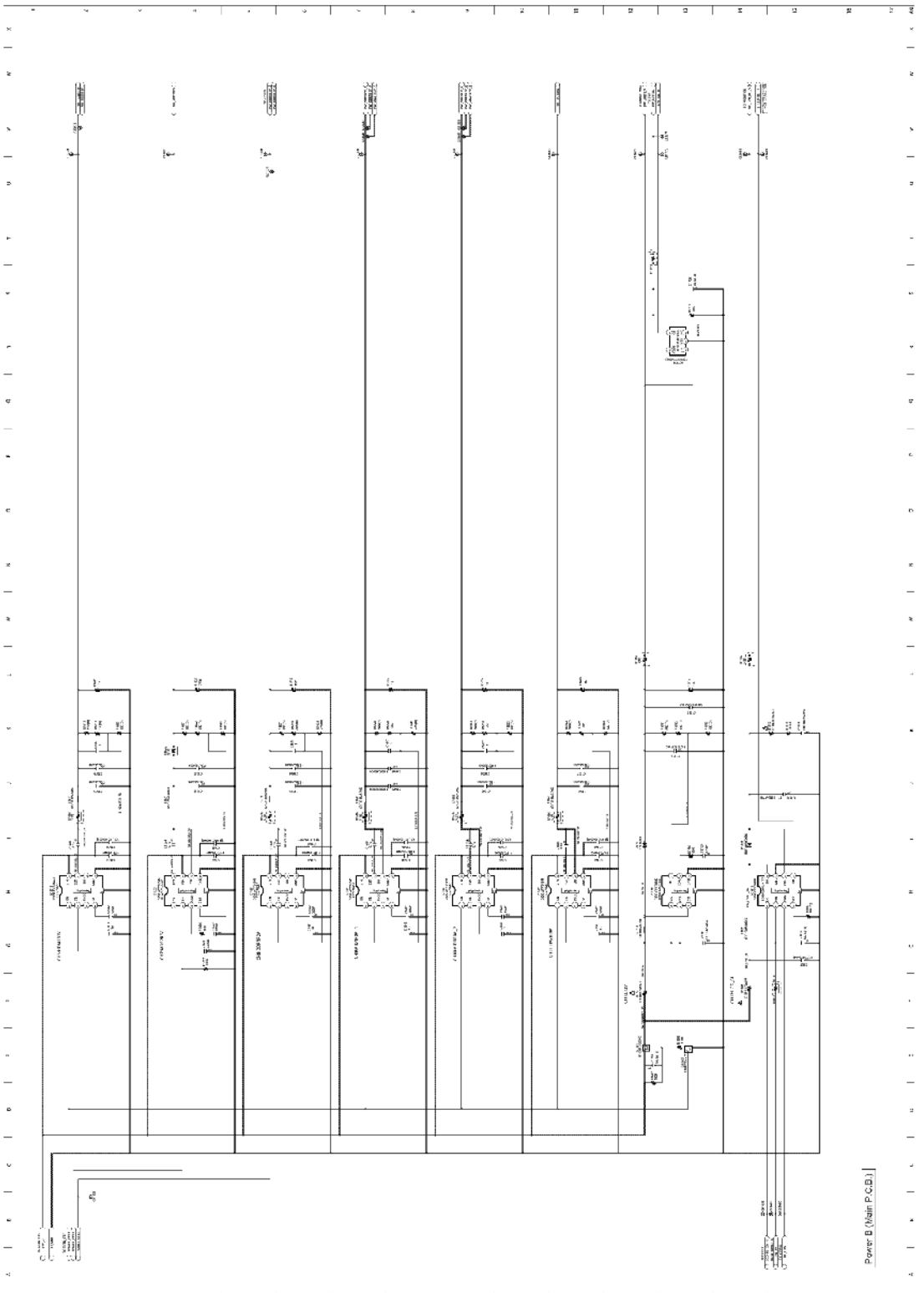

Model No. : HC-X1E/EE/PP/GC/GD MOS connection (Main P.C.B.)

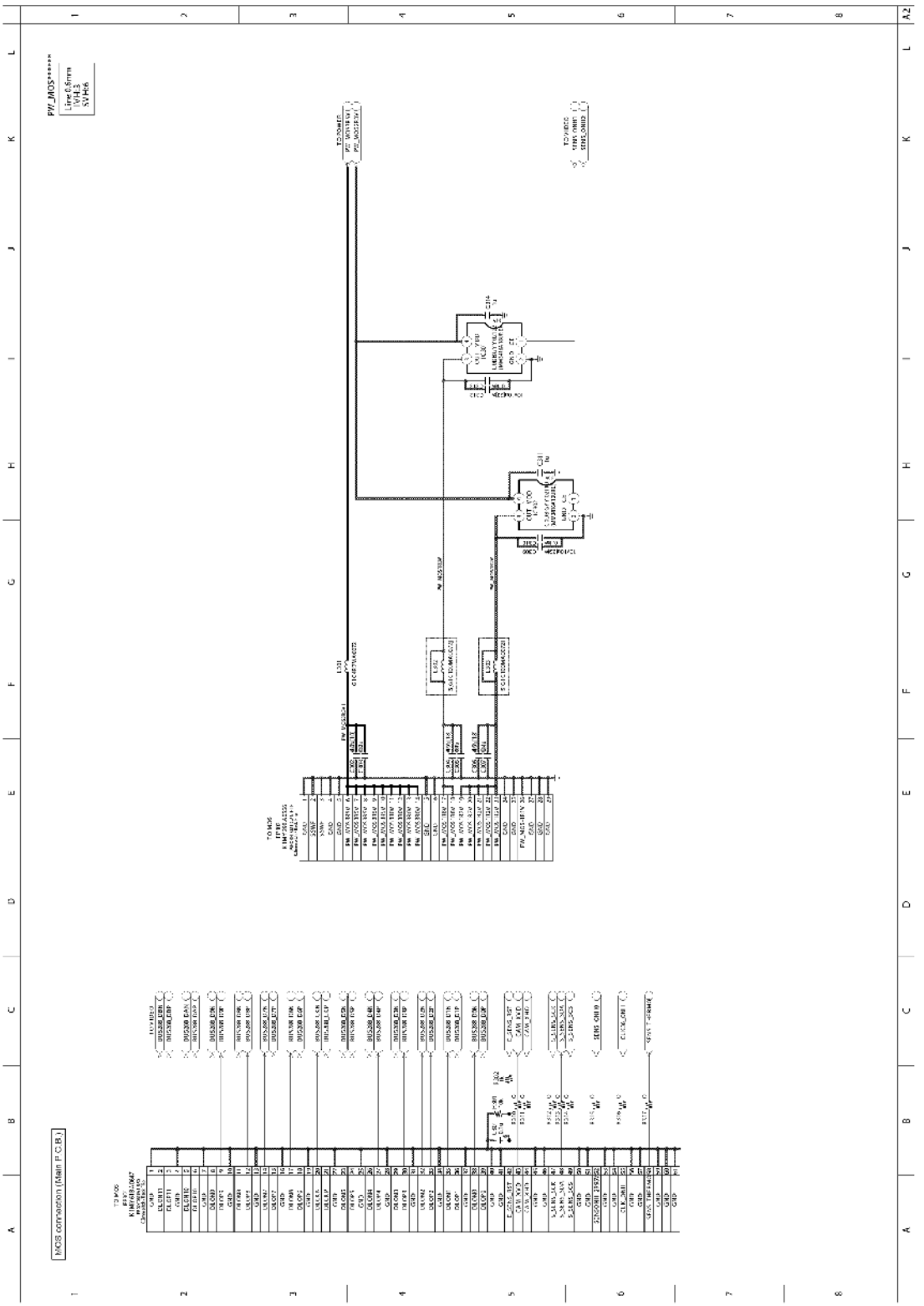

Model No. : HC-X1E/EE/PP/GC/GD Audio ADC (Main P.C.B.)

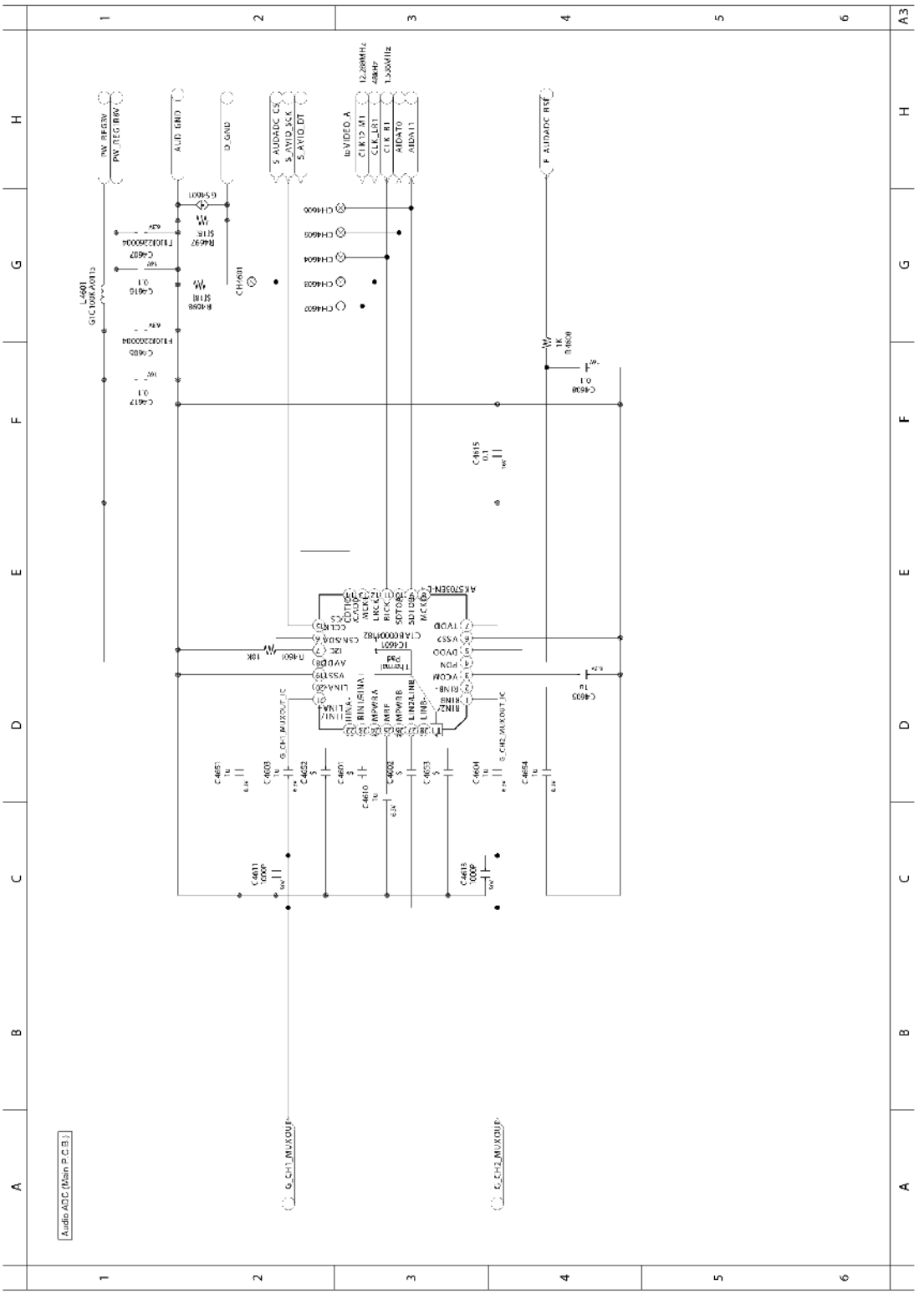

Model No. : HC-X1E/EE/PP/GC/GD Audio MUX (Main P.C.B.)

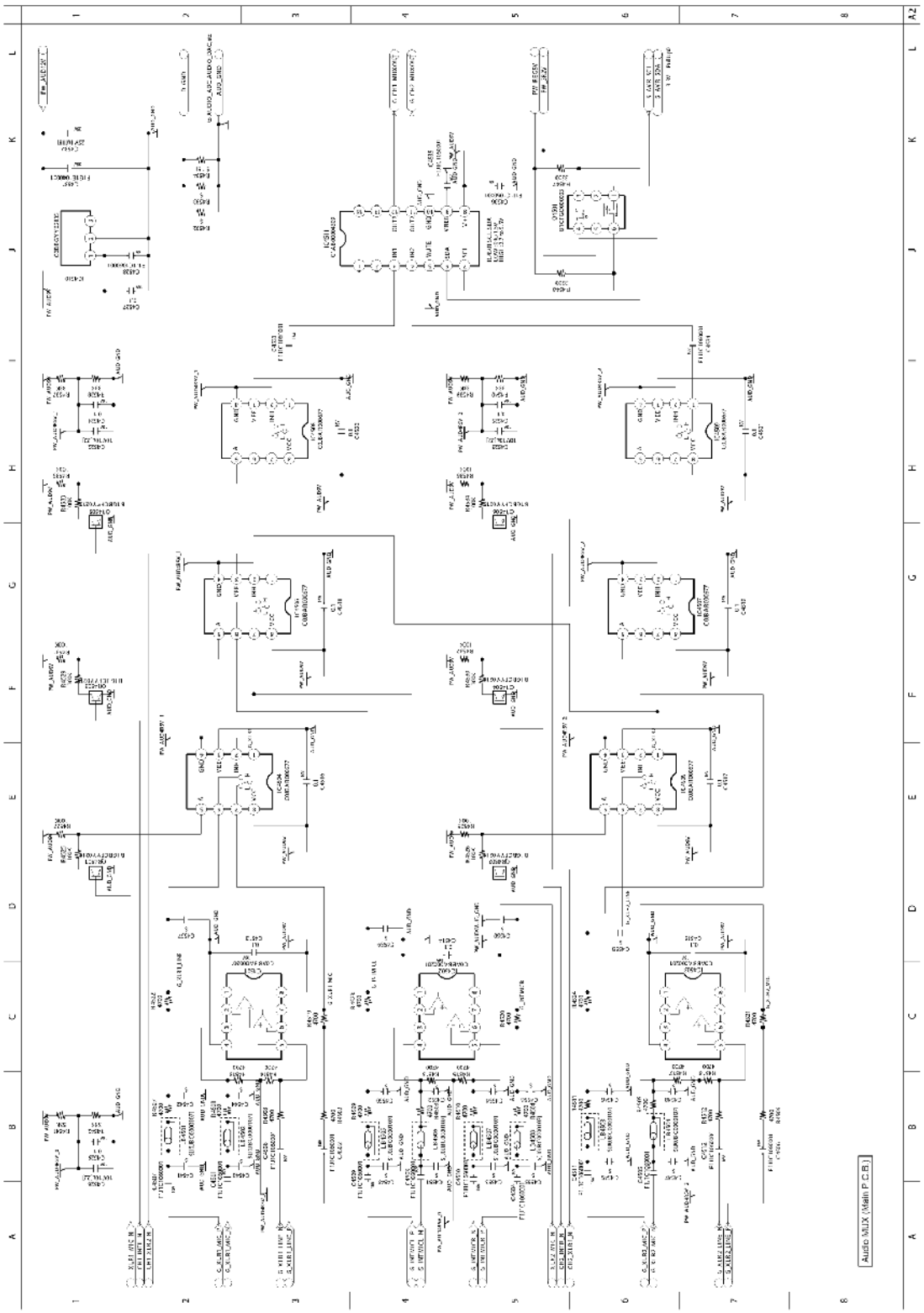

Model No. : HC-X1E/EE/PP/GC/GD DCin RTC (Main P.C.B.)

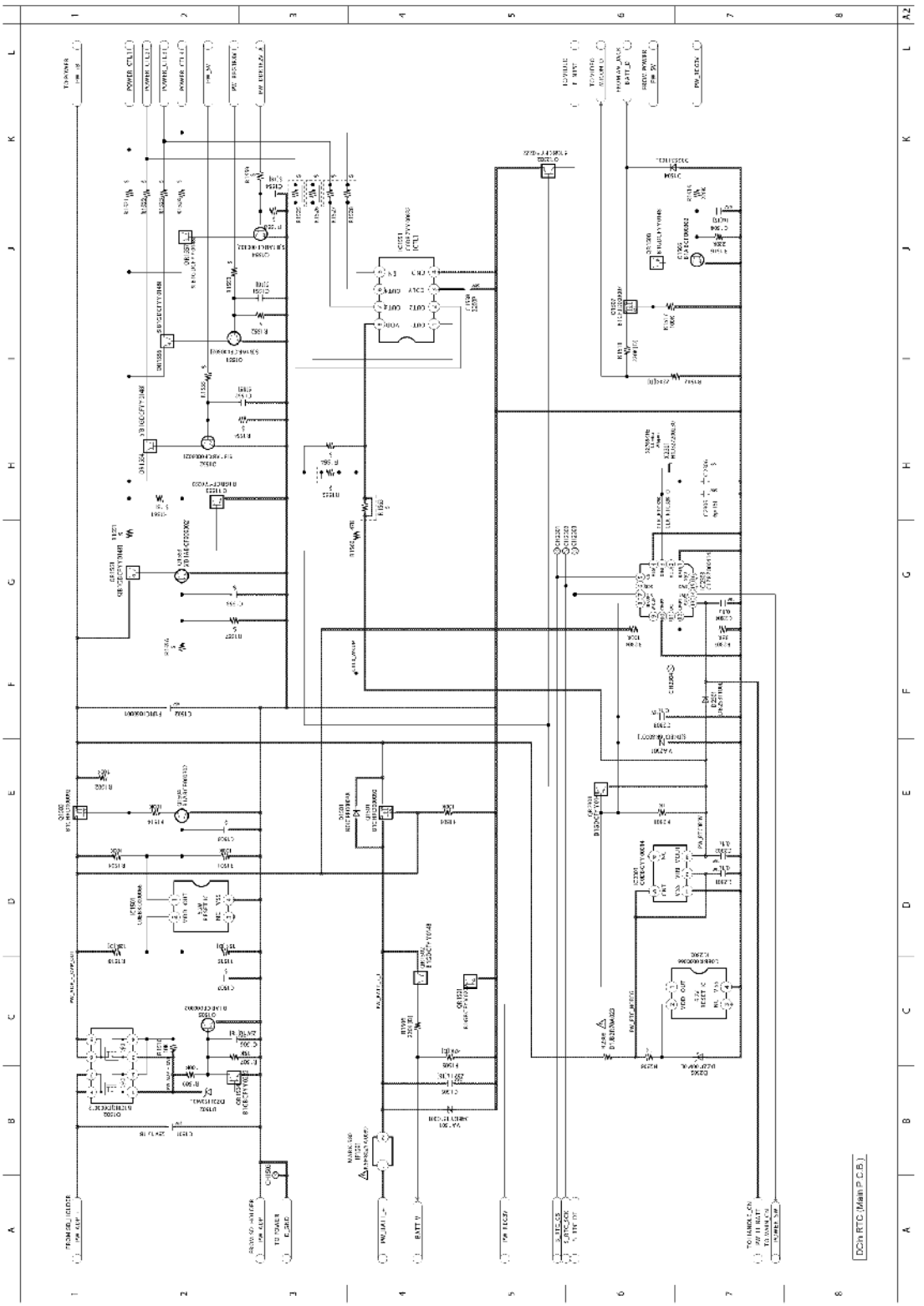

Model No. : HC-X1E/EE/PP/GC/GD FPGA (Main P.C.B.)

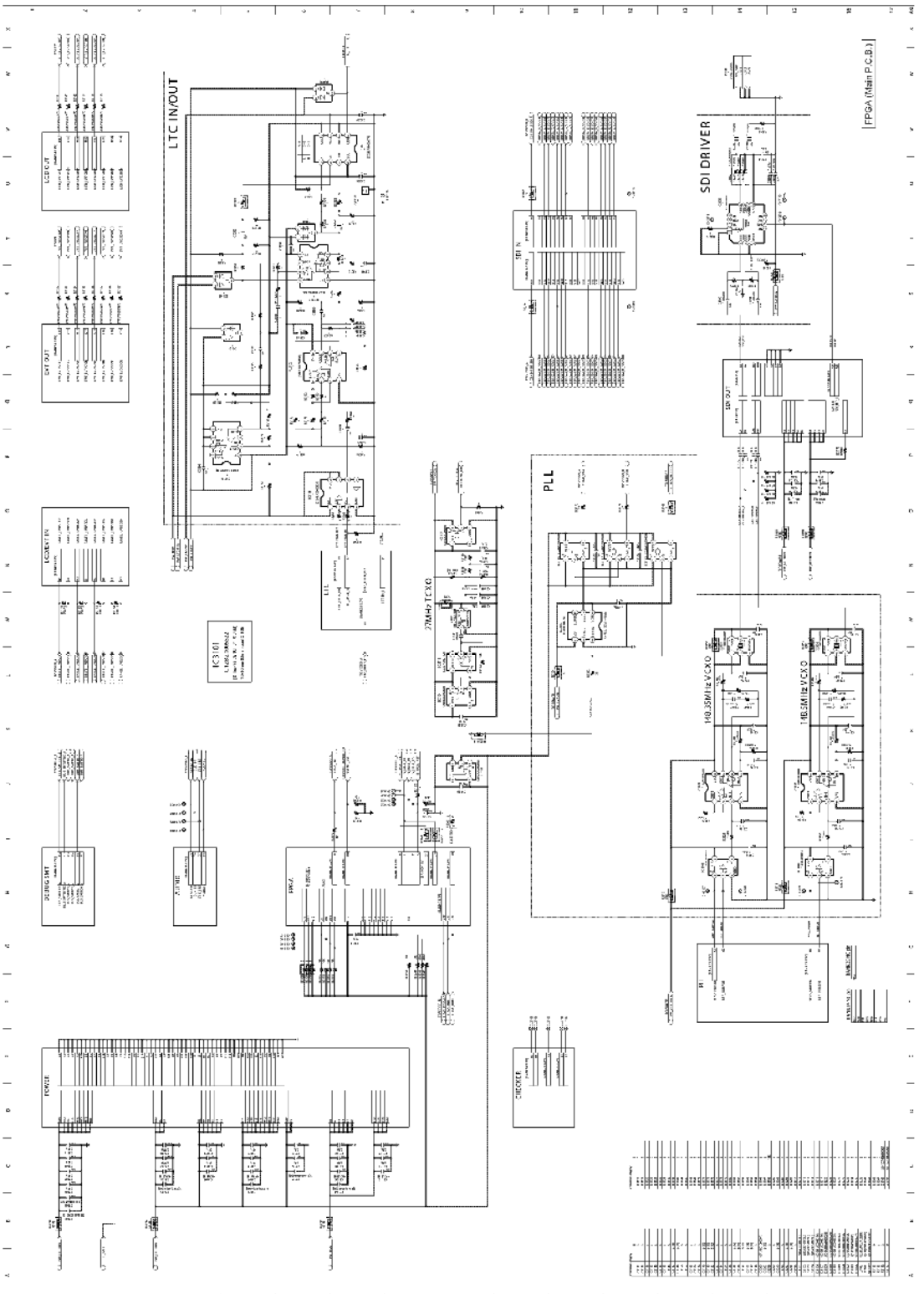

Model No. : HC-X1E/EE/PP/GC/GD HDMI (Main P.C.B.)

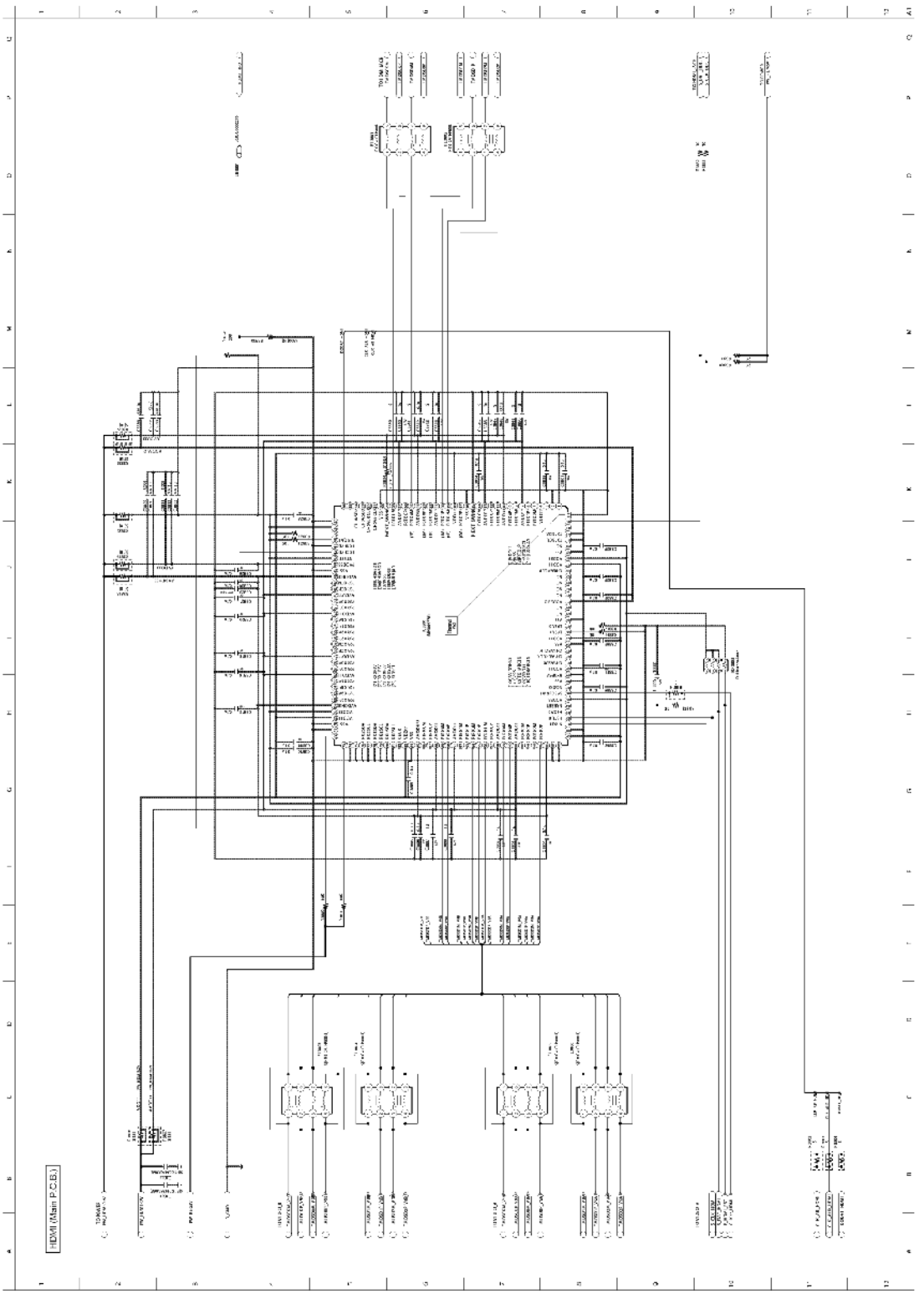

Model No. : HC-X1E/EE/PP/GC/GD USB (Main P.C.B.)

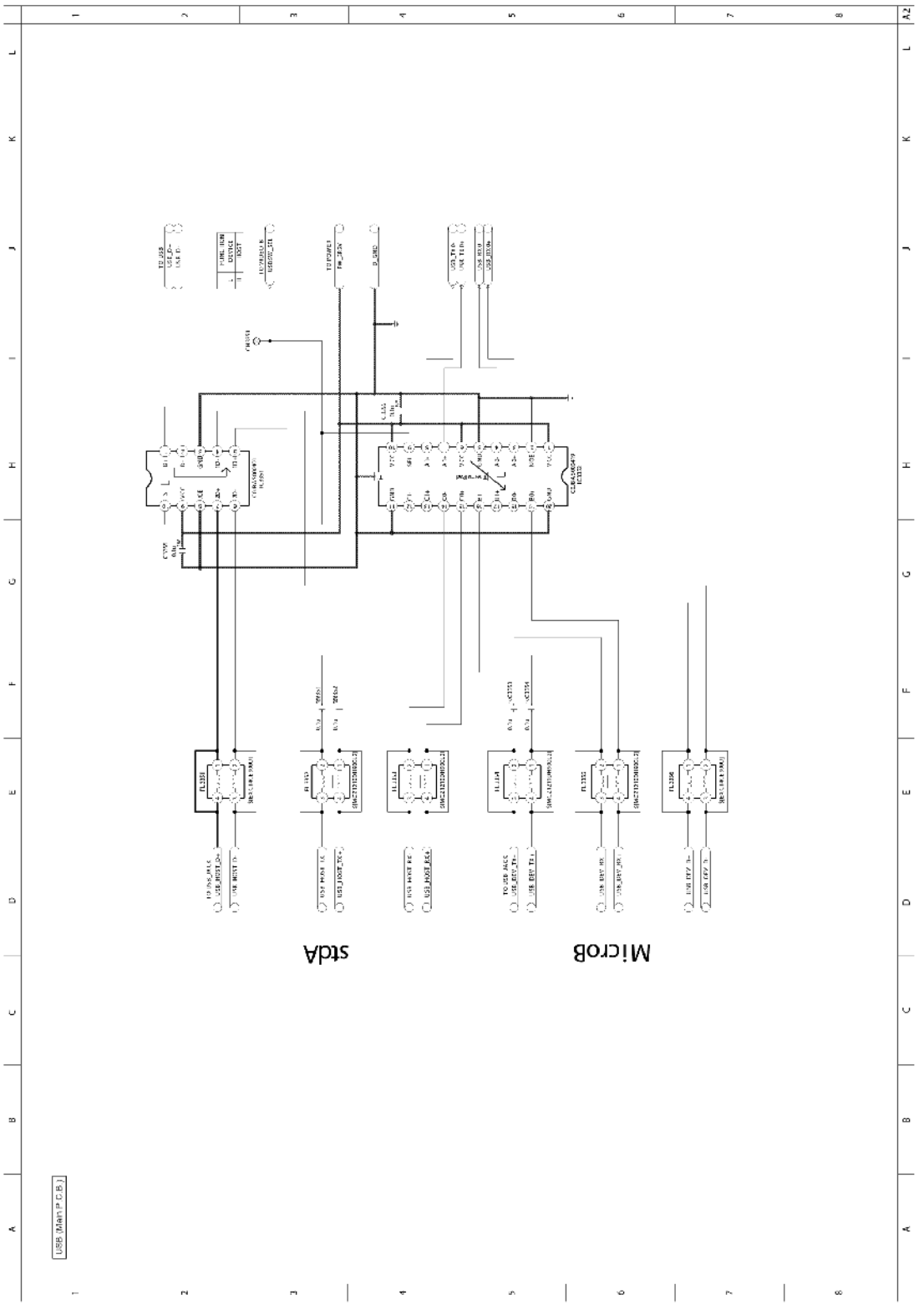

Model No. : HC-X1E/EE/PP/GC/GD SD UHS (Main P.C.B.)

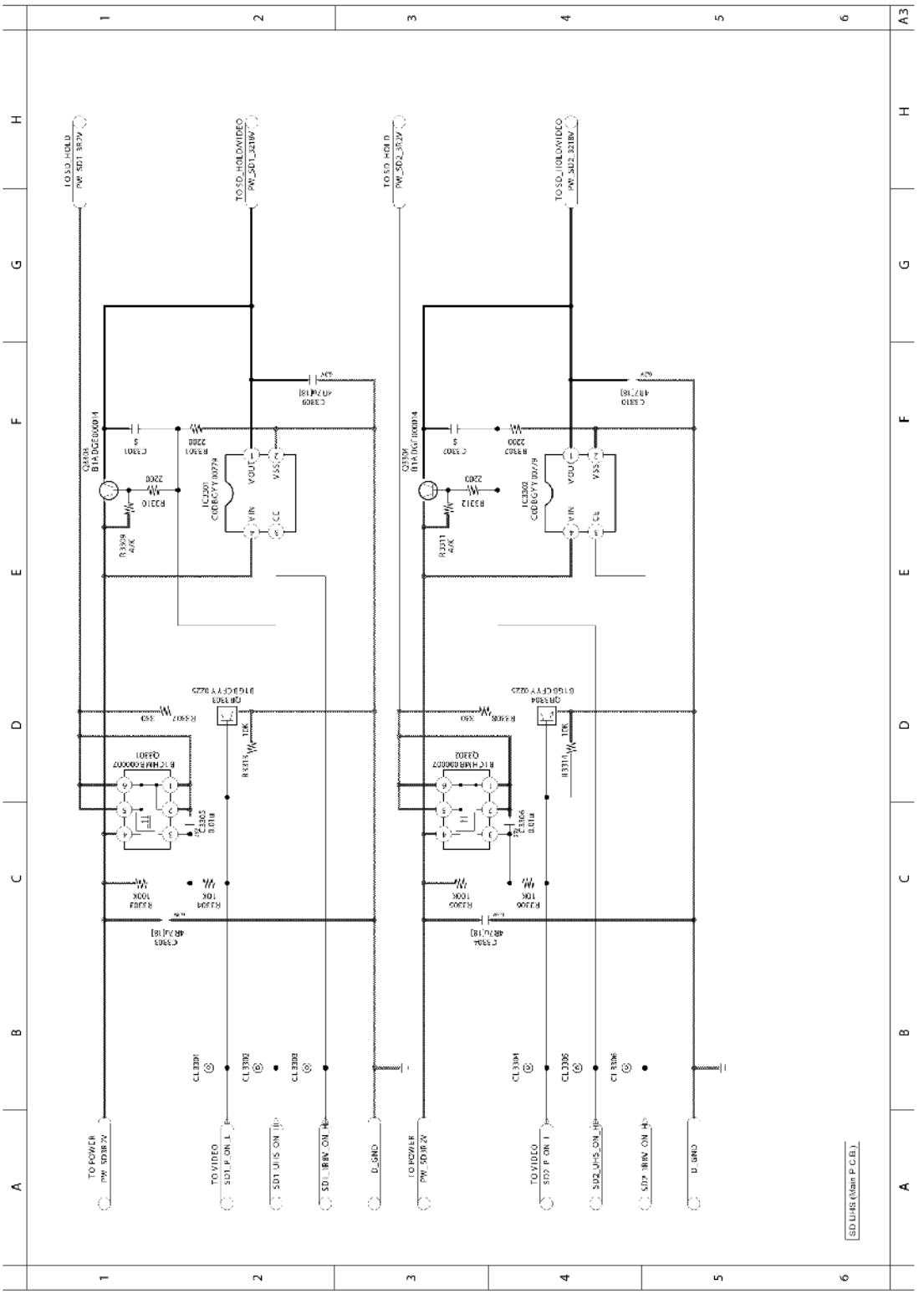

Model No. : HC-X1E/EE/PP/GC/GD Handle Operation (Handle Operation P.C.B.)

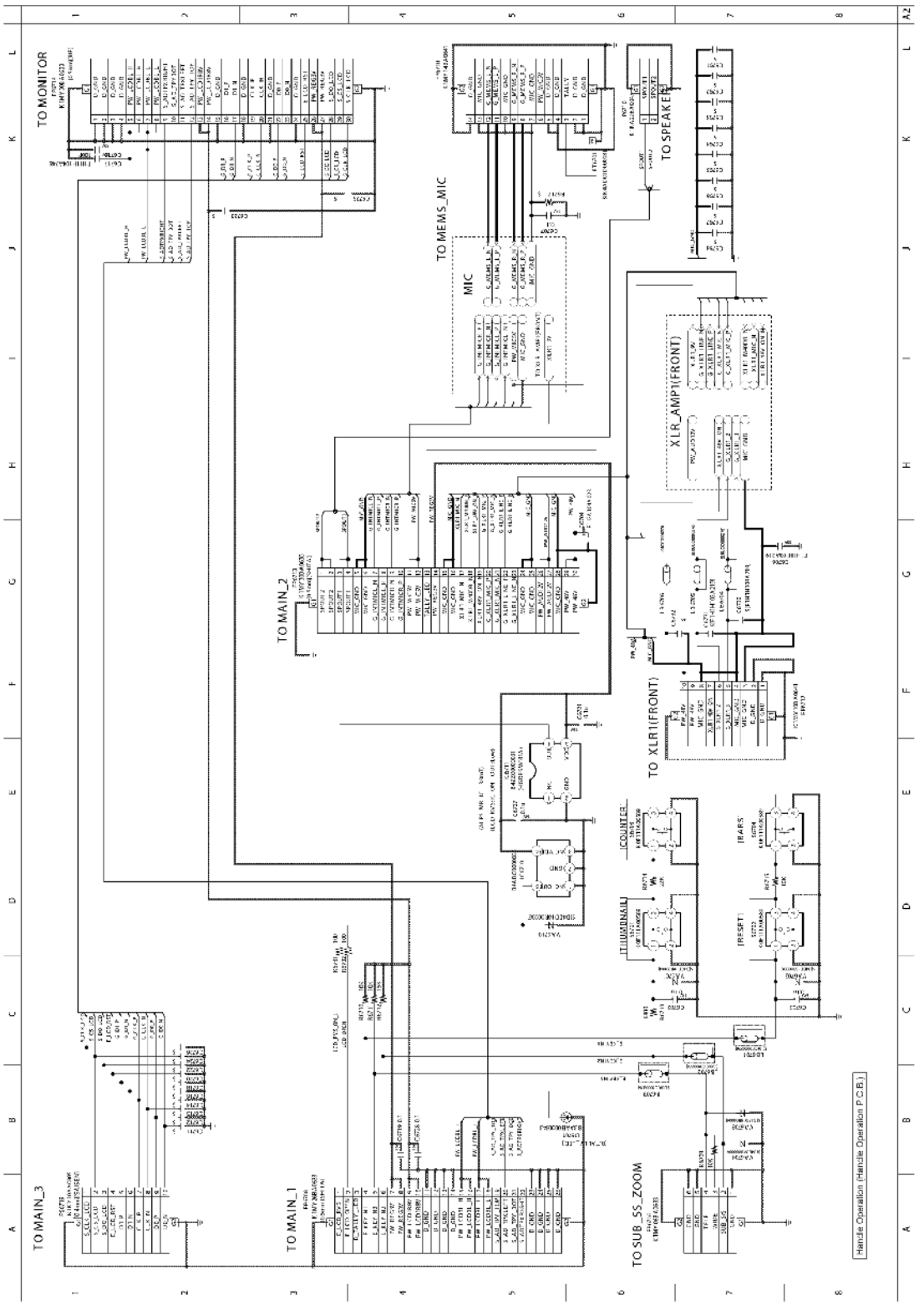

Model No. : HC-X1E/EE/PP/GC/GD MIC (Handle Operation P.C.B.)

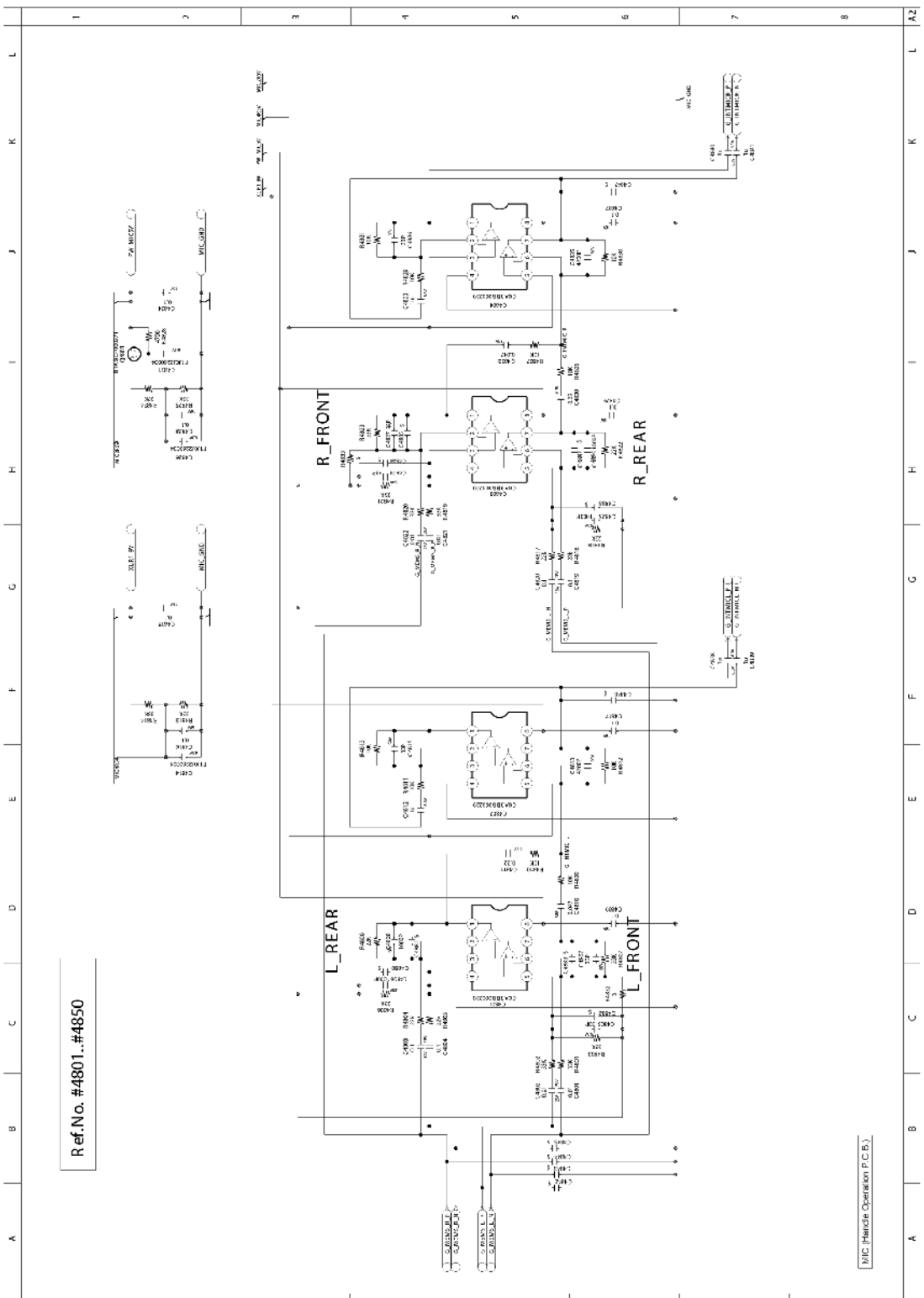

Model No. : HC-X1E/EE/PP/GC/GD XLR Front 1 (Handle Operation P.C.B.)

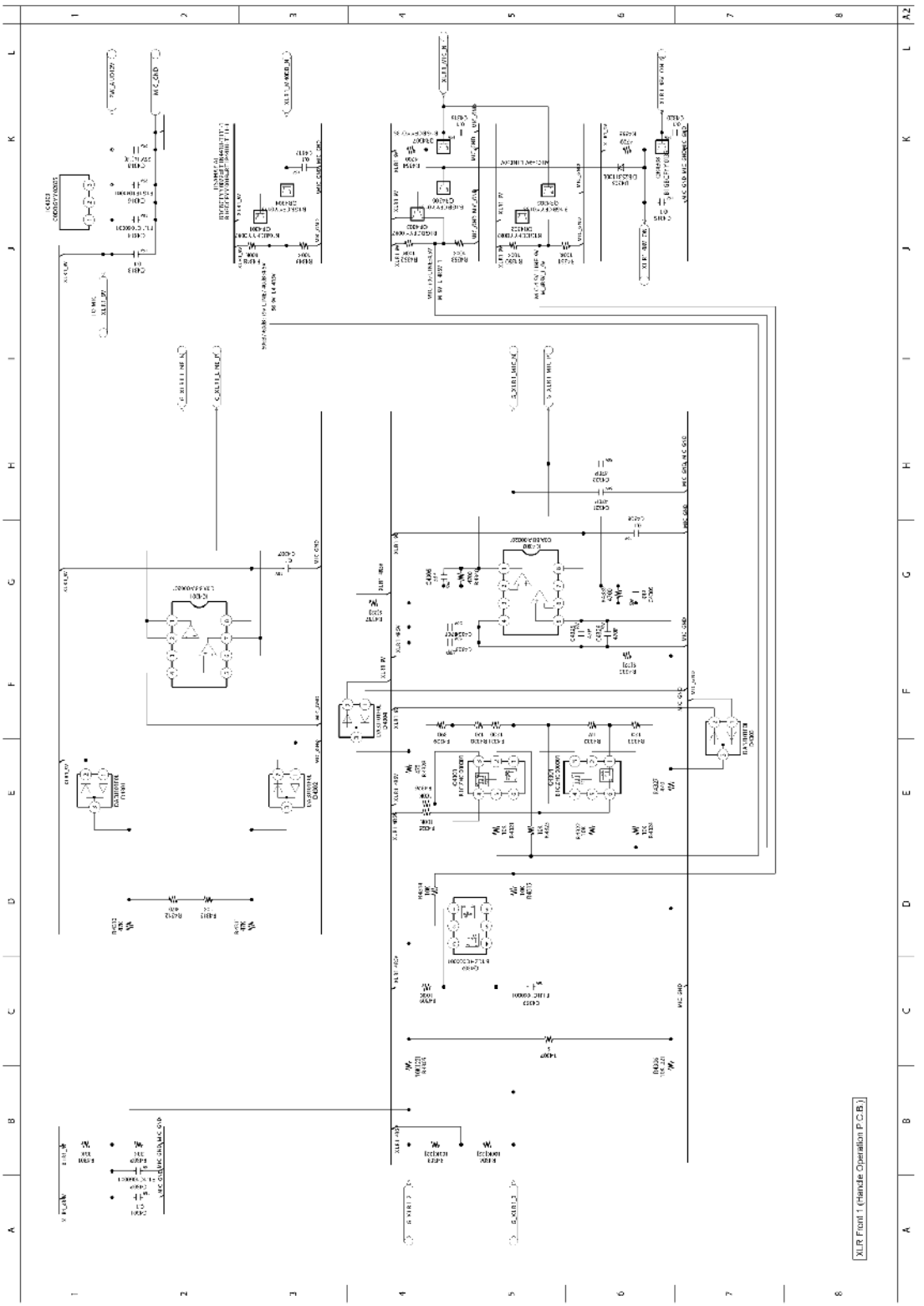

Model No. : HC-X1E/EE/PP/GC/GD Side R Operation (Side R Operation P.C.B.)

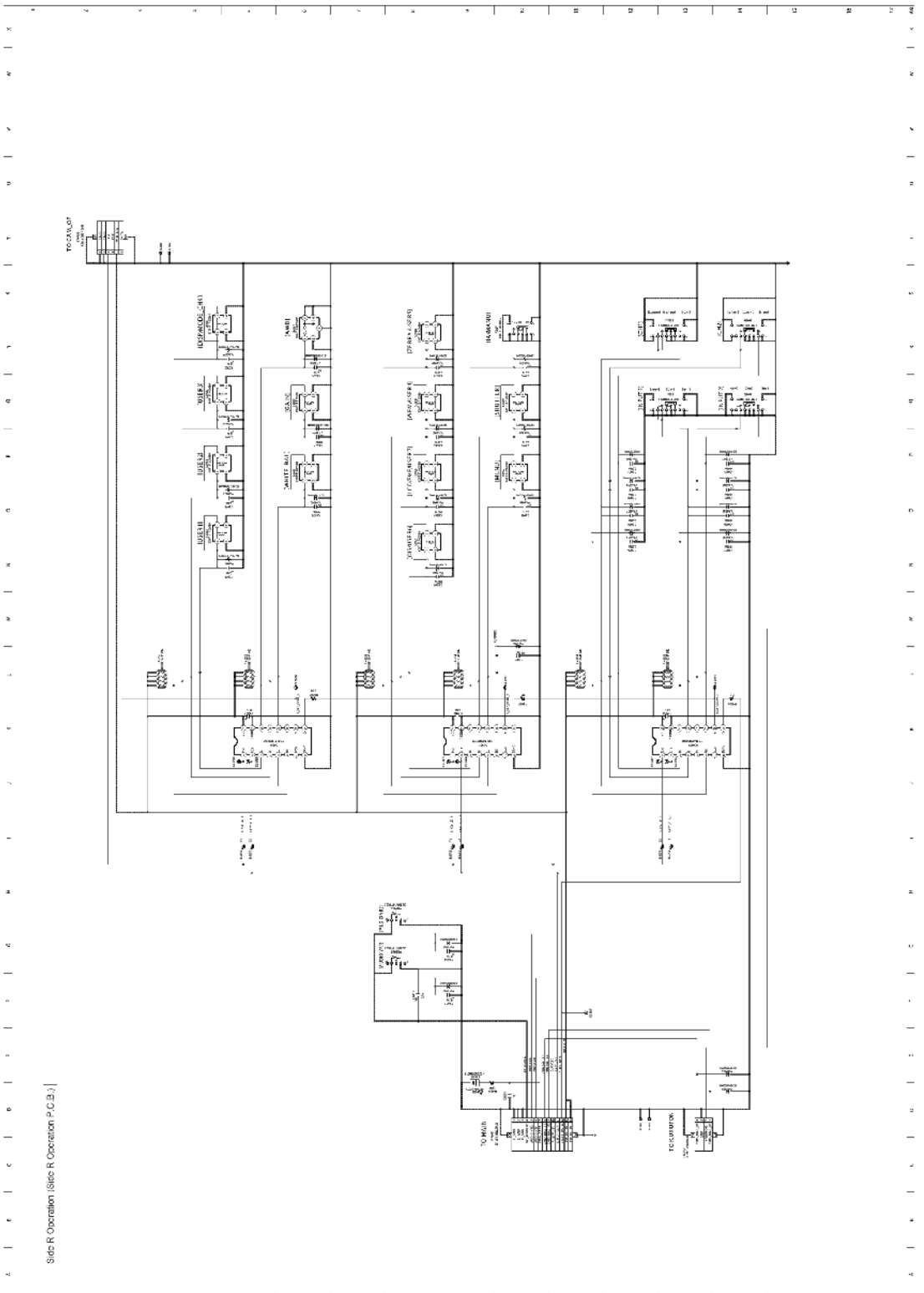

Model No. : HC-X1E/EE/PP/GC/GD Battery Catcher (Battery Catcher P.C.B.)

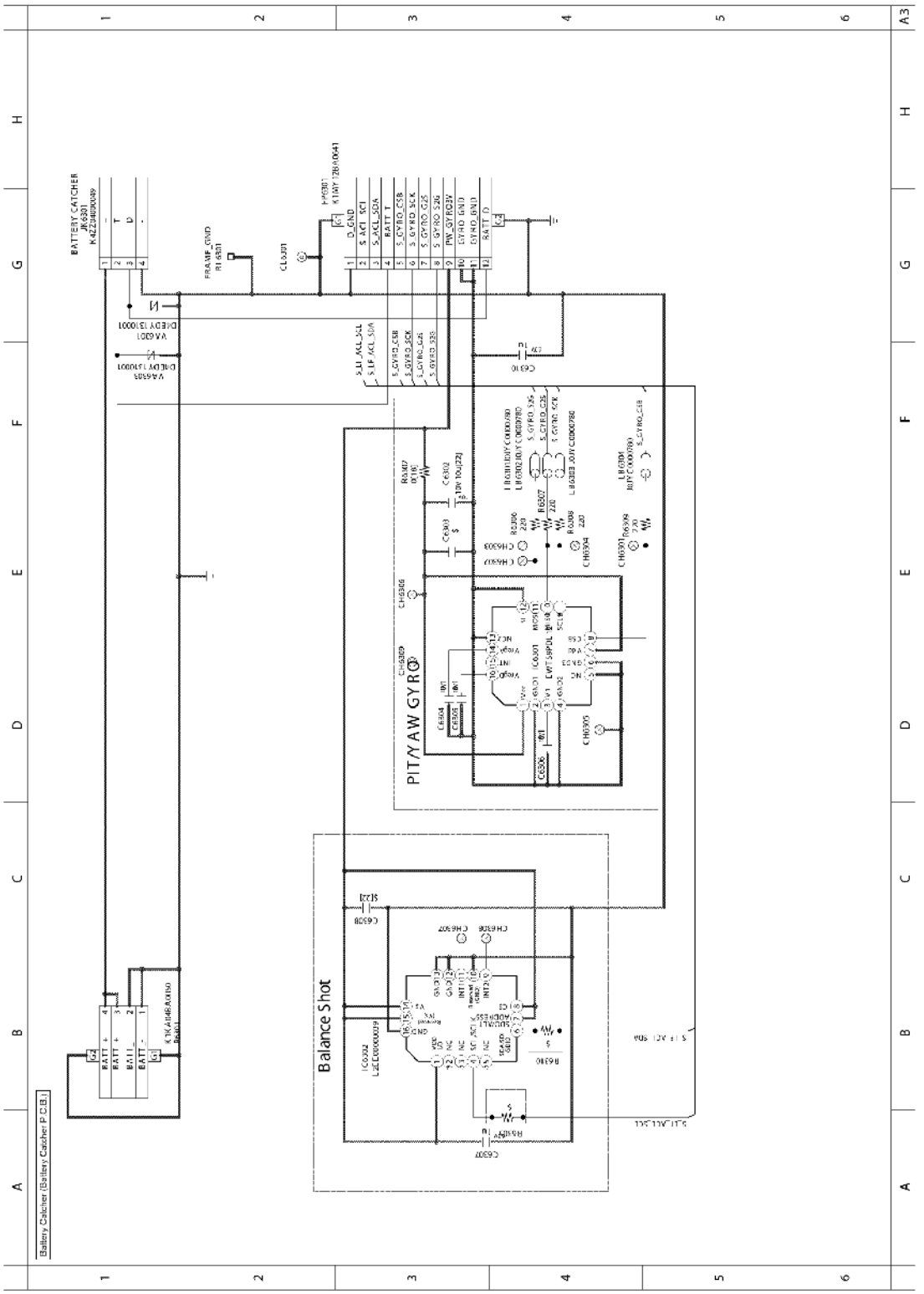

Model No. : HC-X1E/EE/PP/GC/GD Monitor (Monitor P.C.B.)

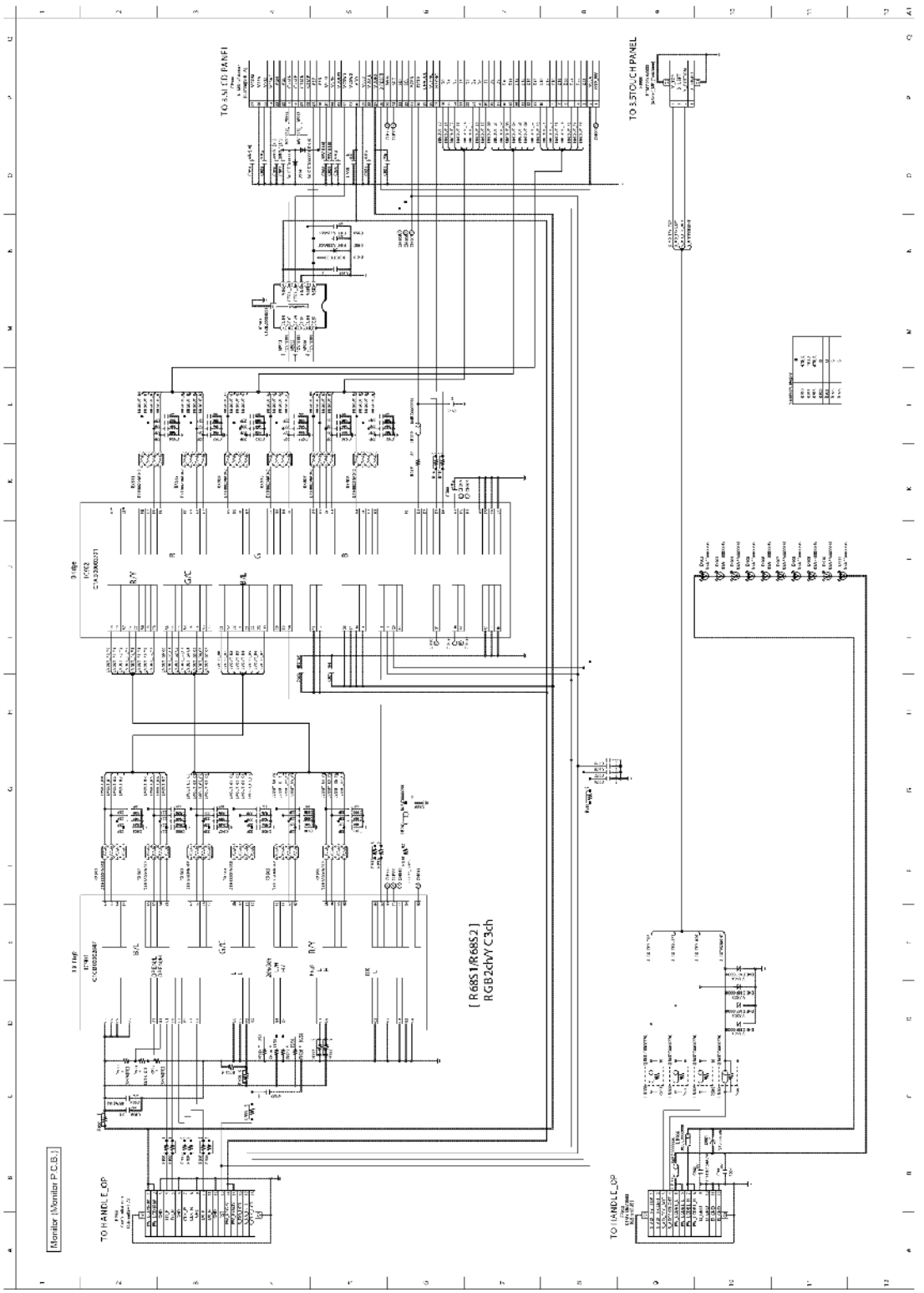

Model No. : HC-X1E/EE/PP/GC/GD Jack Pin (Jack Pin P.C.B.)

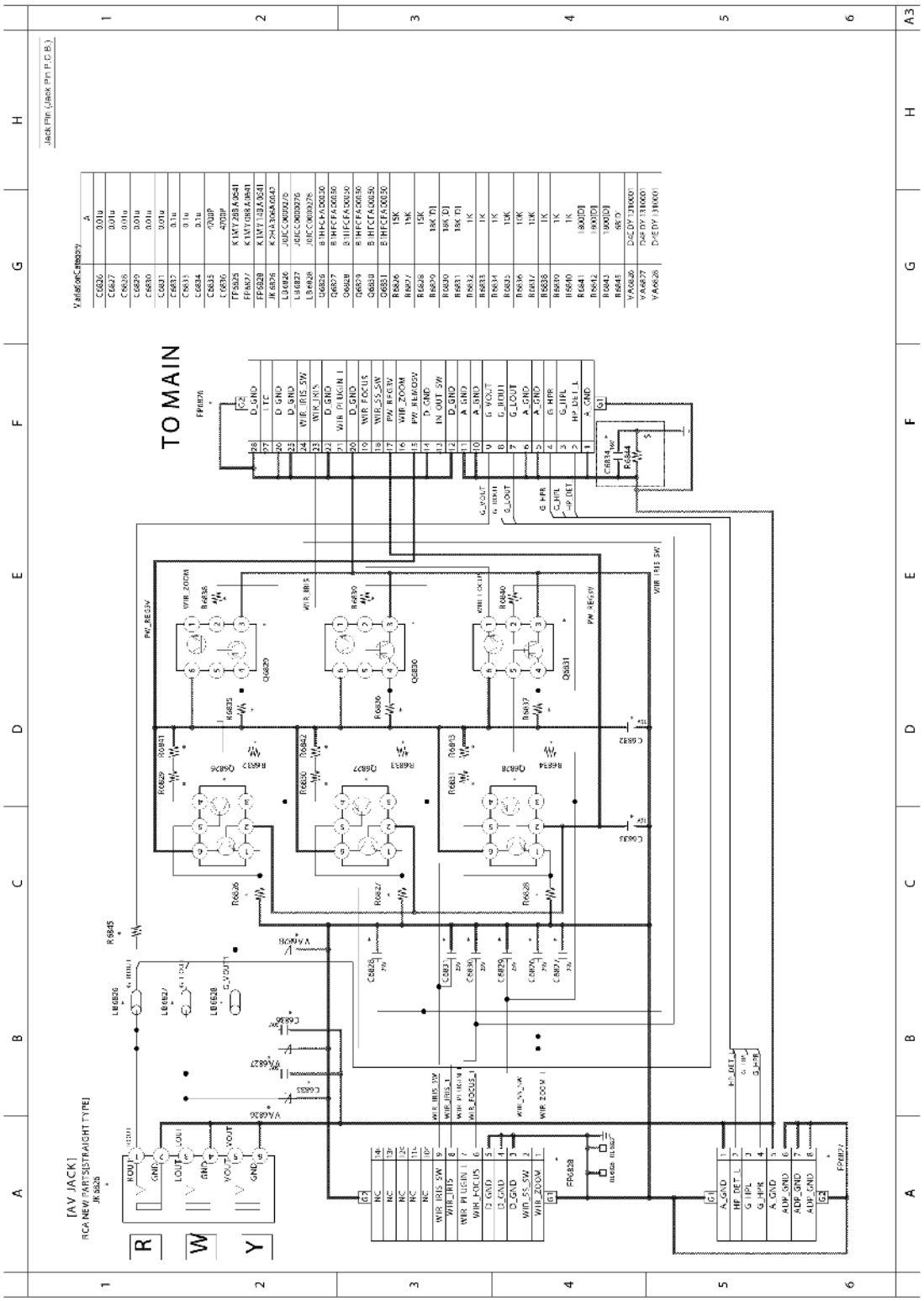

Model No. : HC-X1E/EE/PP/GC/GD Jack A Wired (Jack A Wired P.C.B.)

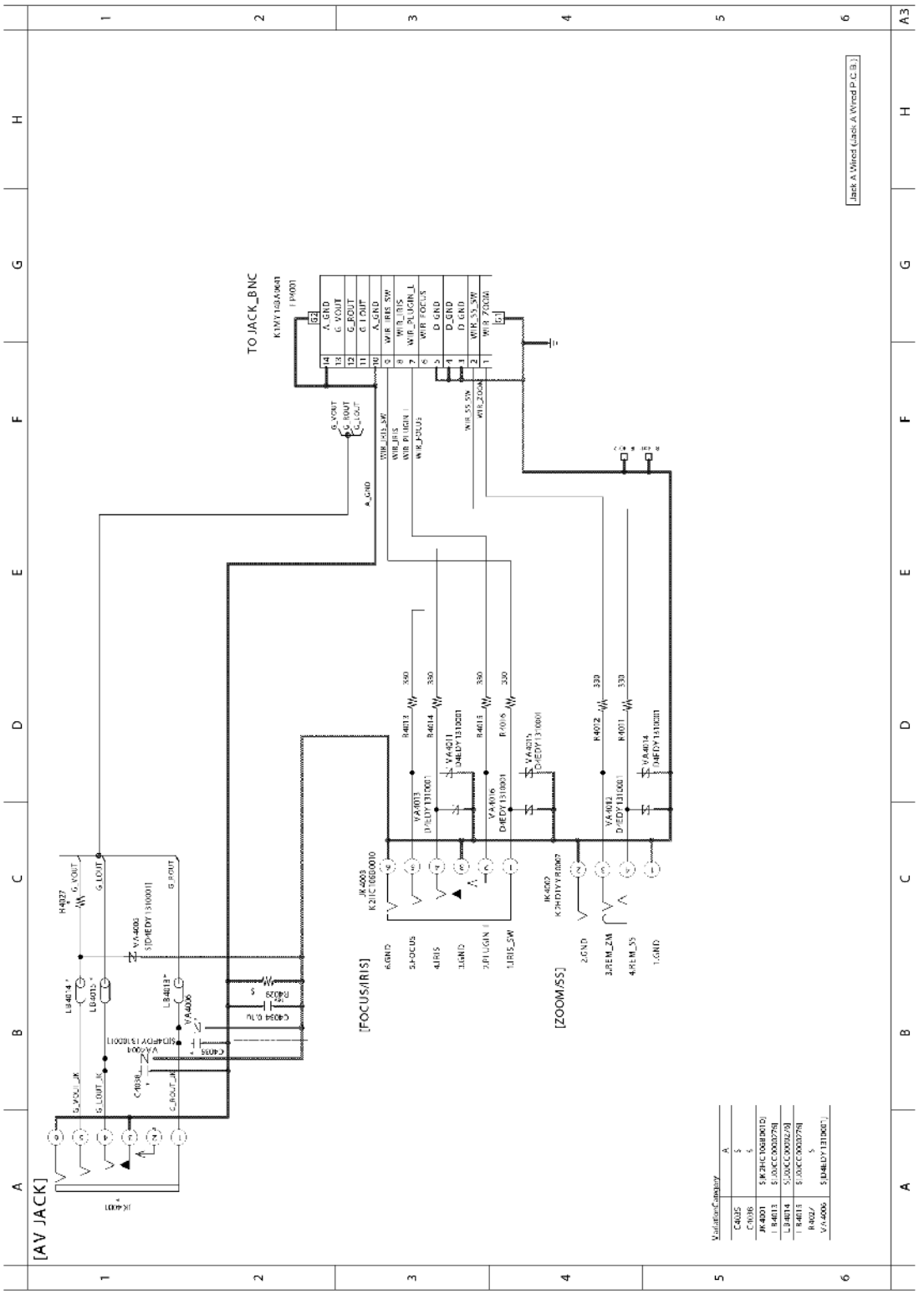

Model No. : HC-X1E/EE/PP/GC/GD Jack DC (Jack DC P.C.B.)

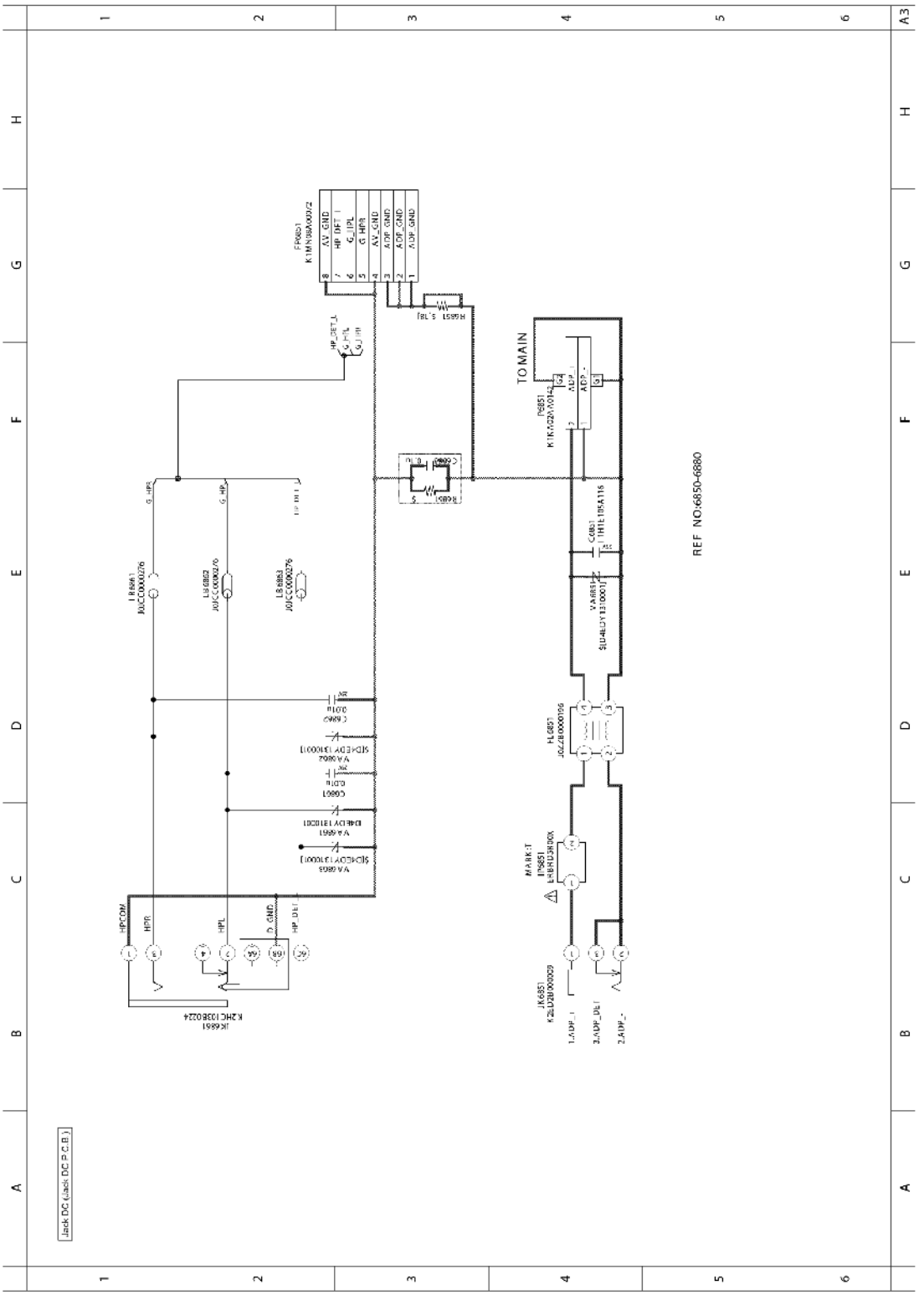

Model No. : HC-X1E/EE/PP/GC/GD Main P.C.B.(Component Side)

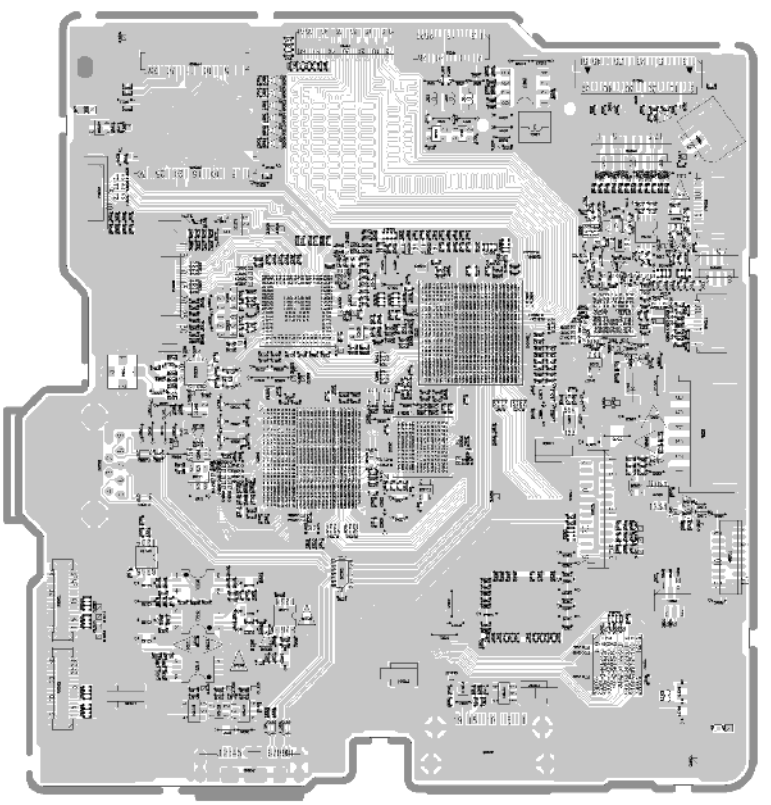

Model No. : HC-X1E/EE/PP/GC/GD Main P.C.B.(Foil Side)

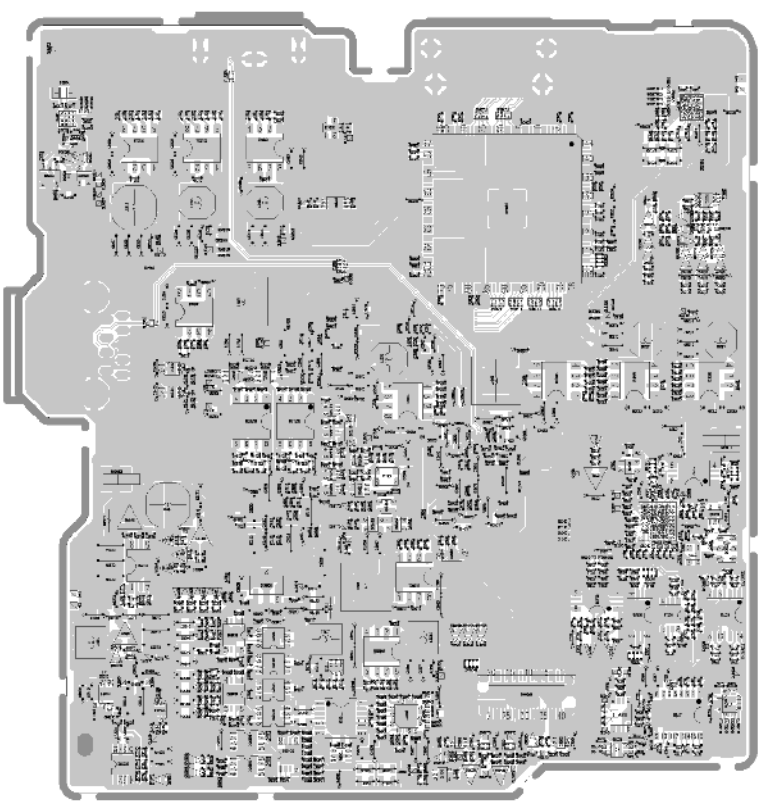

Model No. : HC-X1E/EE/PP/GC/GD Handle Operation P.C.B.(Component Side)

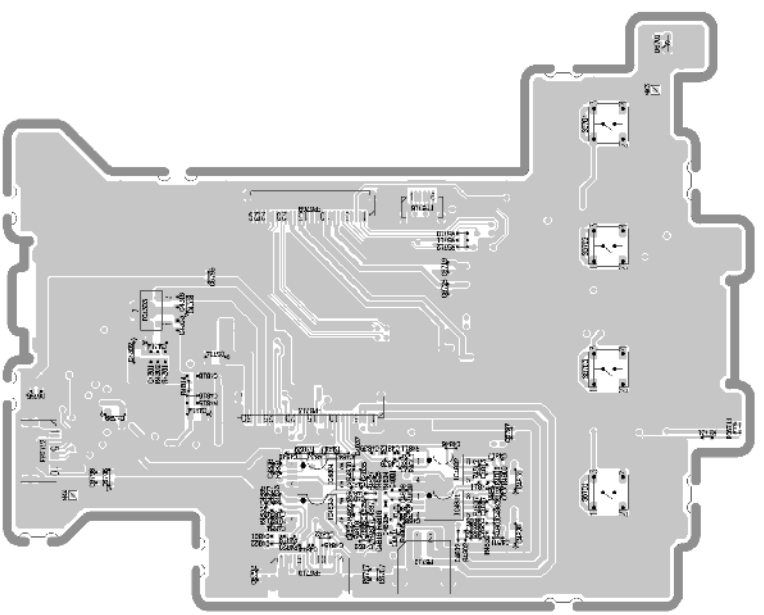

Model No. : HC-X1E/EE/PP/GC/GD Handle Operation P.C.B.(Foil Side)

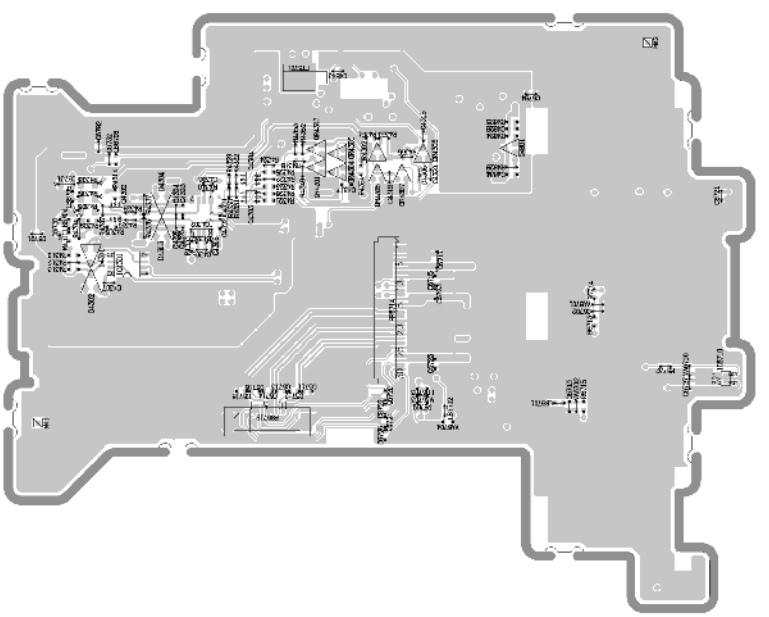

Model No. : HC-X1E/EE/PP/GC/GD Side R Operation P.C.B.(Component Side)

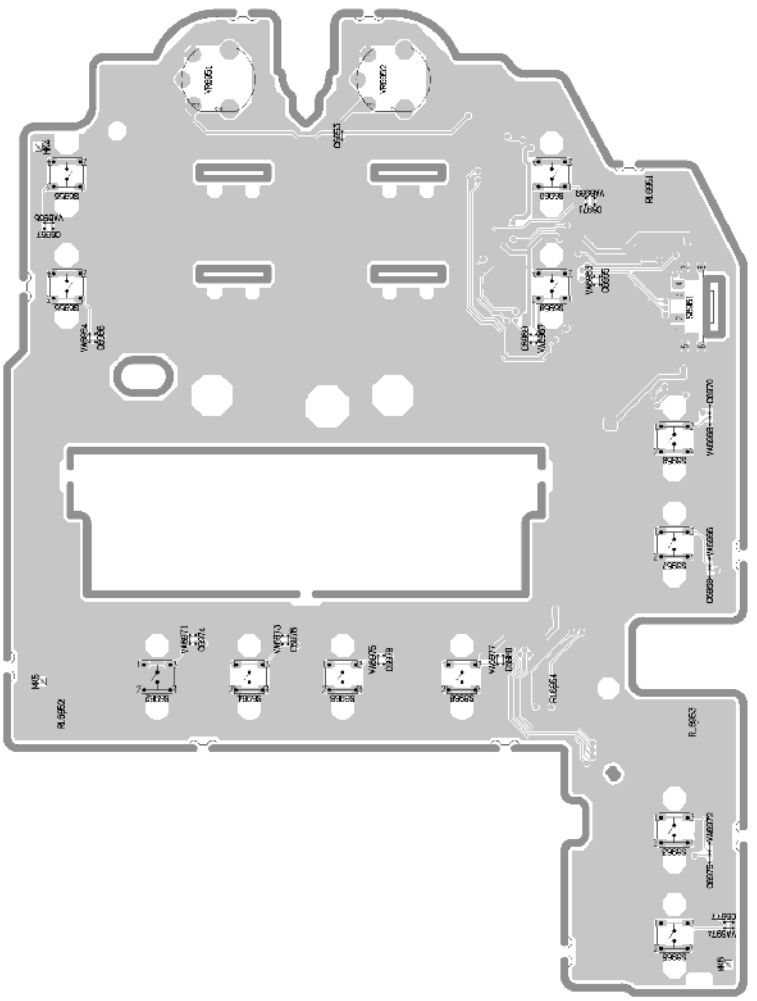

Model No. : HC-X1E/EE/PP/GC/GD Side R Operation P.C.B.(Foil Side)

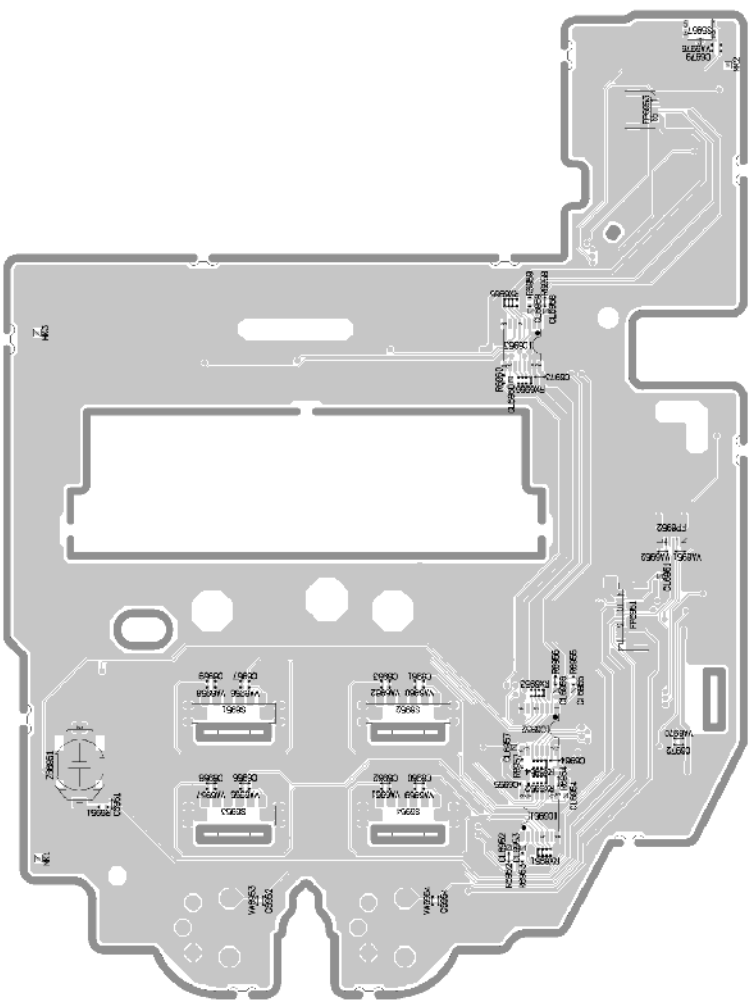

Model No. : HC-X1E/EE/PP/GC/GD Battery Catcher P.C.B.(Component Side)

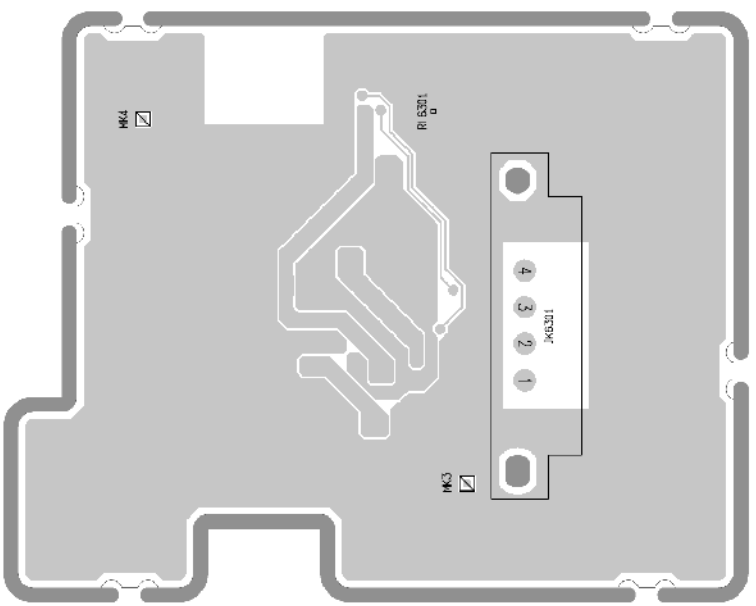

Model No. : HC-X1E/EE/PP/GC/GD Battery Catcher P.C.B.(Foil Side)

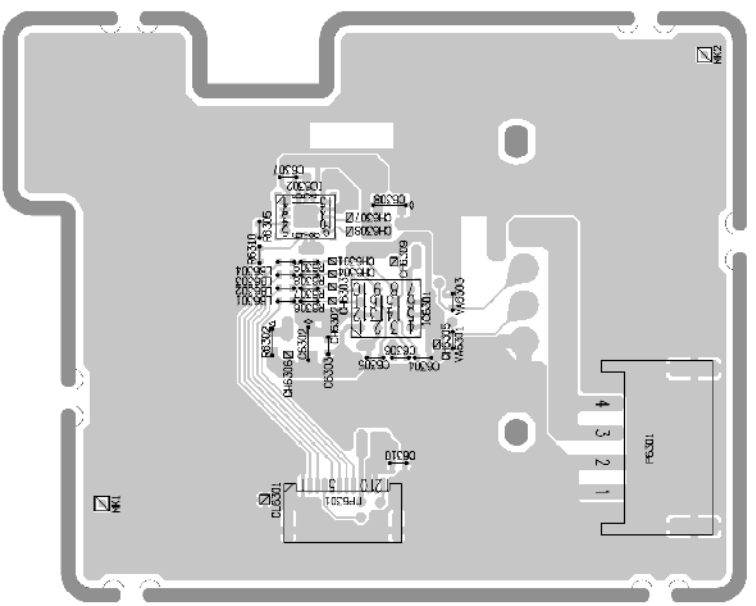

Model No. : HC-X1E/EE/PP/GC/GD Monitor P.C.B.(Component Side)

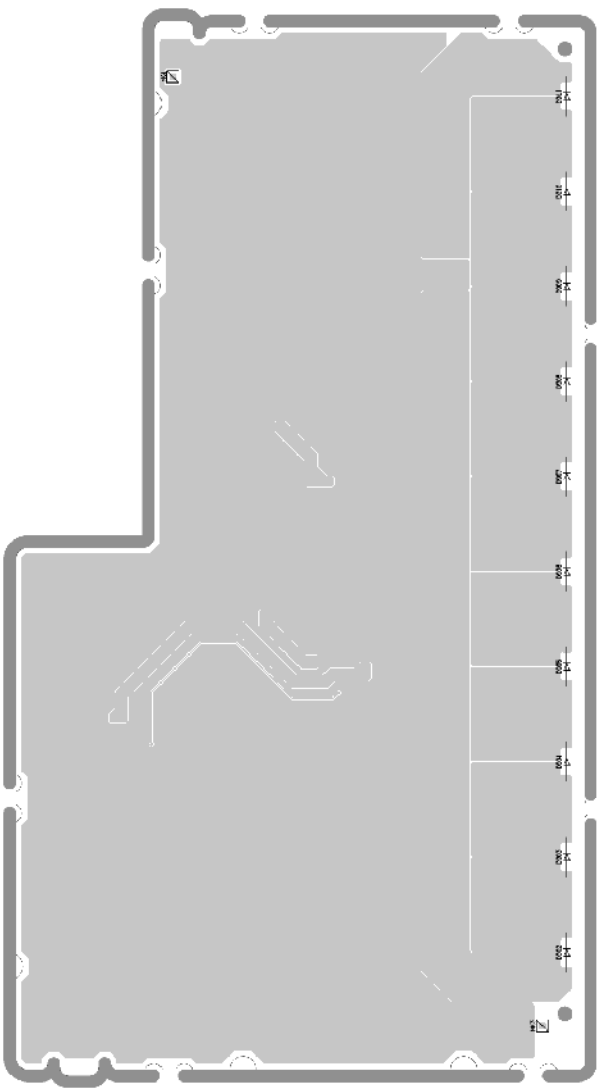

Model No. : HC-X1E/EE/PP/GC/GD Monitor P.C.B.(Foil Side)

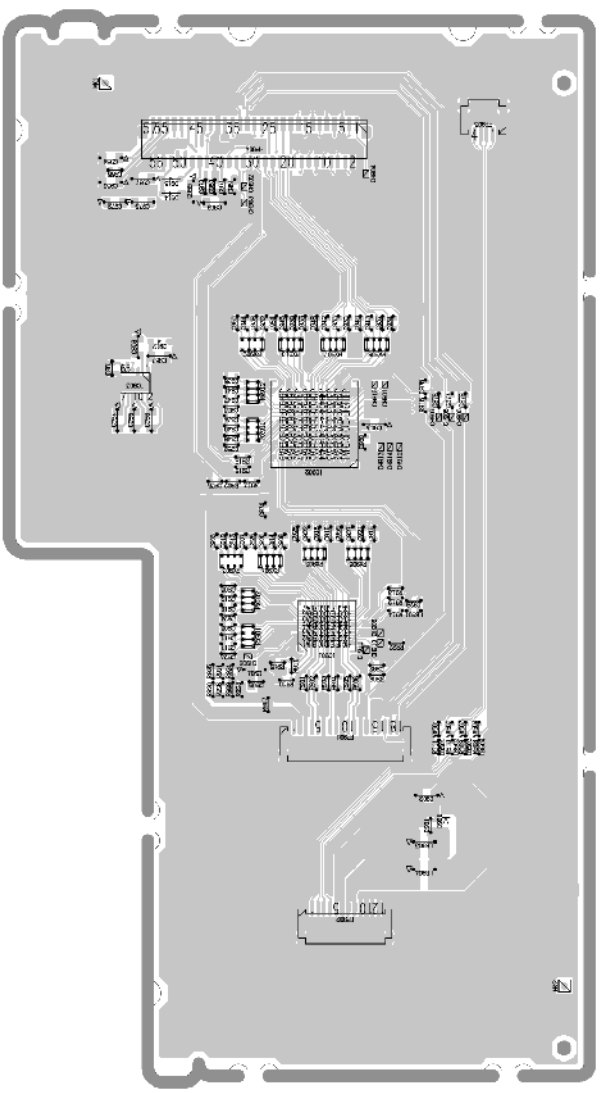

Model No. : HC-X1E/EE/PP/GC/GD Jack Pin P.C.B.(Component Side)

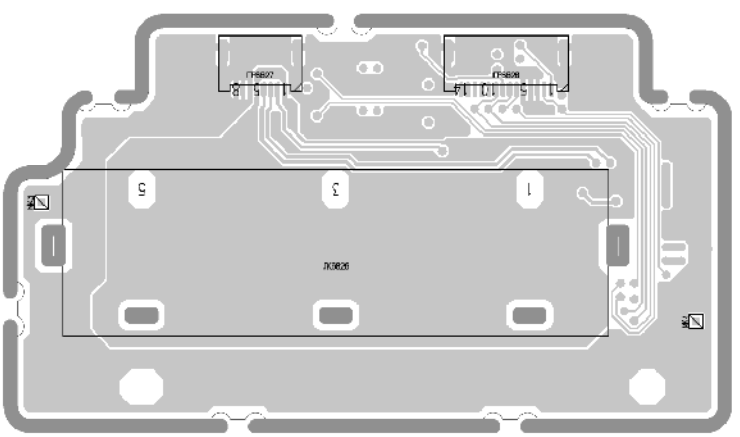

Model No. : HC-X1E/EE/PP/GC/GD Jack Pin P.C.B.(Foil Side)

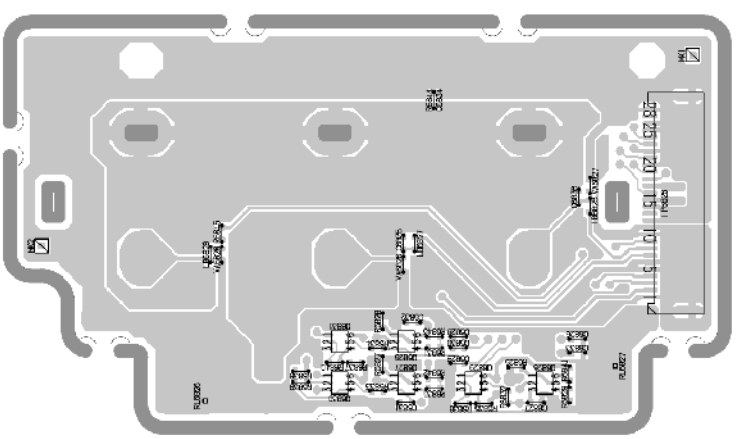

Model No. : HC-X1E/EE/PP/GC/GD Jack A Wired P.C.B.(Component Side)

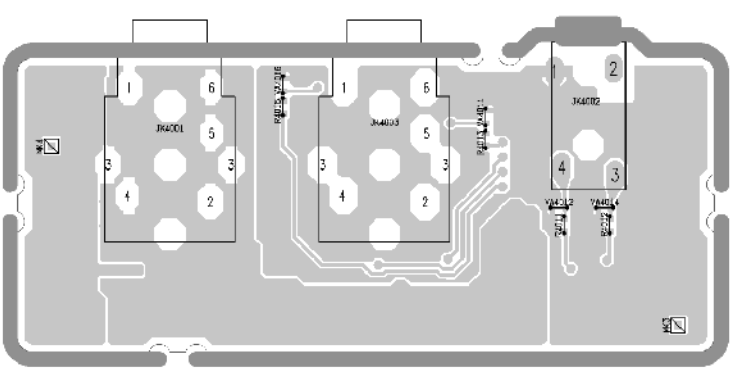

Model No. : HC-X1E/EE/PP/GC/GD Jack A Wired P.C.B.(Foil Side)

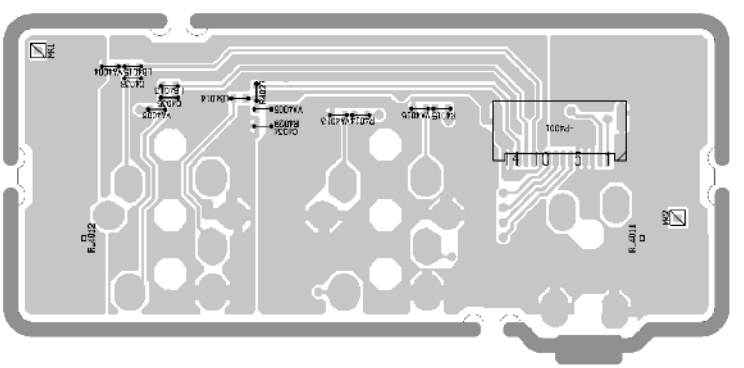

Model No. : HC-X1E/EE/PP/GC/GD Jack DC P.C.B.(Component Side)

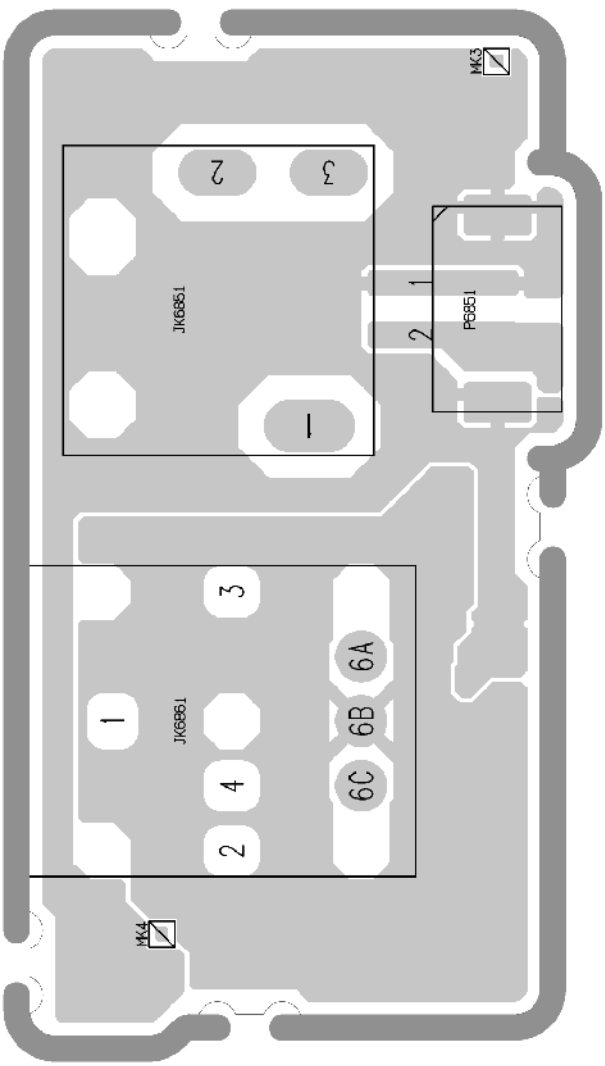

Model No. : HC-X1E/EE/PP/GC/GD Jack DC P.C.B.(Foil Side)

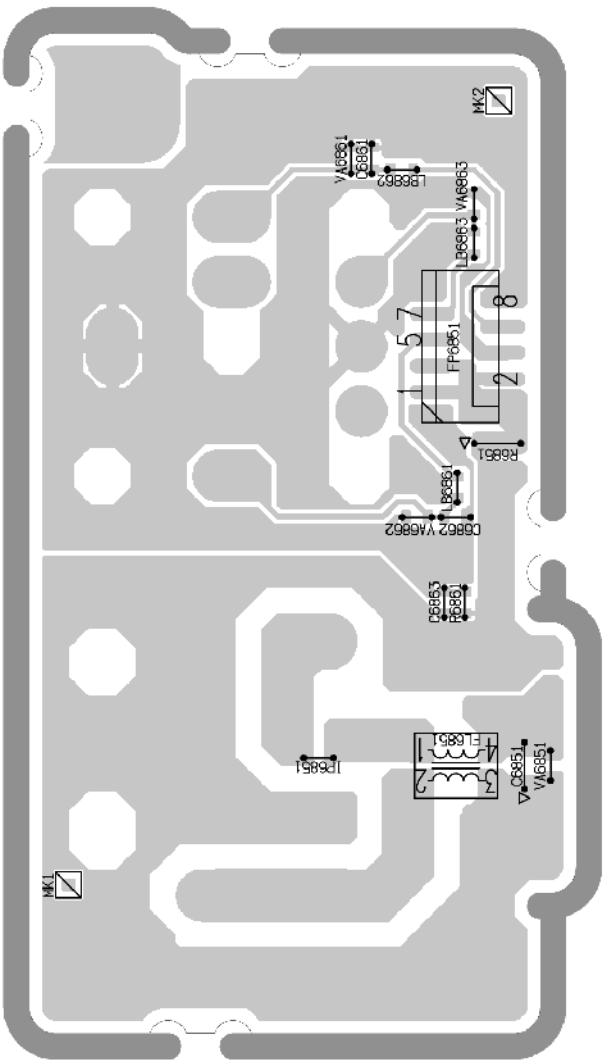

Model No. : HC-X1E/EE/PP/GC/GD Parts List

Change	Safety	Ref. No.	Part No.	Part Name & Description	Q'ty	Remarks
	⚠	B6951	ML-614S/ZTK	BATTERY	1	
		C301	F1G1C104A119	CAPACITOR	1	
		C302	F1H0J4750004	CAPACITOR	1	
		C303	F1G1C104A119	CAPACITOR	1	
		C304	F1H0J4750004	CAPACITOR	1	
		C305	F1G1C104A119	CAPACITOR	1	
		C306	F1H0J4750004	CAPACITOR	1	
		C307	F1G1C104A119	CAPACITOR	1	
		C309	F1J1A106A043	CAPACITOR	1	
		C310	F1G1C104A119	CAPACITOR	1	
		C311	F1G0J1050007	CAPACITOR	1	
		C312	F1J1A106A043	CAPACITOR	1	
		C313	F1G1C104A119	CAPACITOR	1	
		C314	F1G0J1050007	CAPACITOR	1	
		C401	F1H0J1060006	CAPACITOR	1	
		C402	F1G1C104A119	CAPACITOR	1	
		C403	F1G1C104A119	CAPACITOR	1	
		C404	F1G1C104A119	CAPACITOR	1	
		C405	F1G1C104A119	CAPACITOR	1	
		C406	F1G1C104A119	CAPACITOR	1	
		C407	F1G1E1030005	CAPACITOR	1	
		C409	F1G1E1030005	CAPACITOR	1	
		C410	F1G1E1030005	CAPACITOR	1	
		C411	F1G1E1030005	CAPACITOR	1	
		C412	F1G1E1030005	CAPACITOR	1	
		C413	F1H0J1060006	CAPACITOR	1	
		C414	F1G1C104A119	CAPACITOR	1	
		C415	F1G1E1030005	CAPACITOR	1	
		C416	F1G1E1030005	CAPACITOR	1	
		C417	F1G1E1030005	CAPACITOR	1	
		C418	F1G1E1030005	CAPACITOR	1	
		C419	F1G1C104A119	CAPACITOR	1	
		C420	F1G1H221A830	CAPACITOR	1	
		C421	F1G1E1030005	CAPACITOR	1	
		C423	F1H0J1060006	CAPACITOR	1	
		C425	F1G1C104A119	CAPACITOR	1	
		C701	F1G1C104A119	CAPACITOR	1	
		C702	F1G0J1050007	CAPACITOR	1	
		C703	F1G0J1050007	CAPACITOR	1	
		C704	F1G0J1050007	CAPACITOR	1	
		C705	F1G0J1050007	CAPACITOR	1	
		C706	F1G0J1050007	CAPACITOR	1	
		C707	F1J1A106A043	CAPACITOR	1	
		C708	F1H0J1060006	CAPACITOR	1	
		C709	F1G1C104A119	CAPACITOR	1	
		C710	F1G1C104A119	CAPACITOR	1	
		C711	F1G1C104A119	CAPACITOR	1	
		C712	F1G1E1030005	CAPACITOR	1	
		C713	F1G1E1030005	CAPACITOR	1	
		C714	F1G1E1030005	CAPACITOR	1	
		C715	F1G1E1030005	CAPACITOR	1	
		C716	F1G1E1030005	CAPACITOR	1	
		C717	F1G1E1030005	CAPACITOR	1	
		C718	F1G1C104A119	CAPACITOR	1	
		C719	F1G1E1030005	CAPACITOR	1	
		C720	F1G1C104A119	CAPACITOR	1	
		C721	F1G1E1030005	CAPACITOR	1	
		C722	F1G1E1030005	CAPACITOR	1	
		C723	F1G1C104A119	CAPACITOR	1	
		C724	F1G0J1050007	CAPACITOR	1	
		C729	F1G1E1030005	CAPACITOR	1	

		C730	F1G1E1030005	CAPACITOR	1	

Model No. : HC-X1E/EE/PP/GC/GD Parts List

Change	Safety	Ref. No.	Part No.	Part Name & Description	Q'ty	Remarks
		C731	F1G1H102A830	CAPACITOR	1	
		C732	F1G1H102A830	CAPACITOR	1	
		C733	F1G1H221A830	CAPACITOR	1	
		C734	F1G1H330A834	CAPACITOR	1	
		C735	F1H1C105A167	CAPACITOR	1	
		C736	F1G1C153A146	CAPACITOR	1	
		C738	F1G1C104A119	CAPACITOR	1	
		C739	F1G1C104A119	CAPACITOR	1	
		C740	F1H1C105A167	CAPACITOR	1	
		C741	F1H1C105A167	CAPACITOR	1	
		C742	F1H0J1060006	CAPACITOR	1	
		C743	F1H0J1060006	CAPACITOR	1	
		C744	F1J1A106A043	CAPACITOR	1	
		C745	F1G1H471A830	CAPACITOR	1	
		C746	F1G1H471A830	CAPACITOR	1	
		C747	F1G1H471A830	CAPACITOR	1	
		C748	F1G1H471A830	CAPACITOR	1	
		C750	F1G1H101A948	CAPACITOR	1	
		C751	F1G1H471A830	CAPACITOR	1	
		C752	F1G1H471A830	CAPACITOR	1	
		C753	F1G1C104A119	CAPACITOR	1	
		C754	F1H1C105A167	CAPACITOR	1	
		C755	F1H1C105A167	CAPACITOR	1	
		C756	F1H1C105A167	CAPACITOR	1	
		C757	F1G1C104A119	CAPACITOR	1	
		C758	F1G1C104A119	CAPACITOR	1	
		C759	F1G0J1050007	CAPACITOR	1	
		C760	F1G0J1050007	CAPACITOR	1	
		C761	F1G1C104A119	CAPACITOR	1	
		C762	F1G0J1050007	CAPACITOR	1	
		C763	F1H1C105A167	CAPACITOR	1	
		C764	F1G1H471A830	CAPACITOR	1	
		C765	F1G1E682A144	CAPACITOR	1	
		C766	F1G1C333A146	CAPACITOR	1	
		C767	F1G1H471A830	CAPACITOR	1	
		C769	F1G1H471A830	CAPACITOR	1	
		C770	F1H1C105A167	CAPACITOR	1	
		C772	F1G1H471A830	CAPACITOR	1	
		C773	F1G1H471A830	CAPACITOR	1	
		C774	F1G0J1050007	CAPACITOR	1	
		C775	F1H1C105A167	CAPACITOR	1	
		C776	F1H1C105A167	CAPACITOR	1	
		C783	F1G0J1050007	CAPACITOR	1	
		C784	F1G0J1050007	CAPACITOR	1	
		C785	F1G0J1050007	CAPACITOR	1	
		C786	F1H1C105A167	CAPACITOR	1	
		C787	F1G0J1050007	CAPACITOR	1	
		C789	F1G1C104A119	CAPACITOR	1	
		C901	F1G1H101A948	CAPACITOR	1	
		C902	F1H1H104A748	CAPACITOR	1	
		C903	F1H0J4750004	CAPACITOR	1	
		C904	F1H0J4750004	CAPACITOR	1	
		C905	F1G1H220A834	CAPACITOR	1	
		C906	F1G1H220A834	CAPACITOR	1	
		C907	F1G1H220A834	CAPACITOR	1	
		C908	F1G1H220A834	CAPACITOR	1	
		C909	F1G1C104A119	CAPACITOR	1	
		C910	F1G1H220A834	CAPACITOR	1	
		C911	F1G1H220A834	CAPACITOR	1	
		C912	F1G1H220A834	CAPACITOR	1	
		C913	F1G1H220A834	CAPACITOR	1	

		C914	F1G1H220A834	CAPACITOR	1	

Model No. : HC-X1E/EE/PP/GC/GD Parts List

Change	Safety	Ref. No.	Part No.	Part Name & Description	Q'ty	Remarks
		C915	F1G1H220A834	CAPACITOR	1	
		C916	F1G1H220A834	CAPACITOR	1	
		C917	F1G1H220A834	CAPACITOR	1	
		C918	F1G1H220A834	CAPACITOR	1	
		C919	F1G1H220A834	CAPACITOR	1	
		C920	F1G1H220A834	CAPACITOR	1	
		C921	F1G1H220A834	CAPACITOR	1	
		C922	F1G1H220A834	CAPACITOR	1	
		C923	F1G1H220A834	CAPACITOR	1	
		C924	F1G1H220A834	CAPACITOR	1	
		C925	F1G1H220A834	CAPACITOR	1	
		C926	F1G1H220A834	CAPACITOR	1	
		C927	F1G1H220A834	CAPACITOR	1	
		C928	F1G1H220A834	CAPACITOR	1	
		C930	F1G1H220A834	CAPACITOR	1	
		C931	F1G1H220A834	CAPACITOR	1	
		C932	F1G1H220A834	CAPACITOR	1	
		C933	F1G1H220A834	CAPACITOR	1	
		C934	F1G1H220A834	CAPACITOR	1	
		C935	F1G1H220A834	CAPACITOR	1	
		C936	F1G1H220A834	CAPACITOR	1	
		C937	F1G1H220A834	CAPACITOR	1	
		C938	F1G1H220A834	CAPACITOR	1	
		C939	F1G1H220A834	CAPACITOR	1	
		C940	F1G1H220A834	CAPACITOR	1	
		C941	F1G1H220A834	CAPACITOR	1	
		C942	F1G1H220A834	CAPACITOR	1	
		C943	F1G1H220A834	CAPACITOR	1	
		C944	F1G1H220A834	CAPACITOR	1	
		C945	F1G1H220A834	CAPACITOR	1	
		C946	F1G1H220A834	CAPACITOR	1	
		C947	F1G1H220A834	CAPACITOR	1	
		C948	F1G1H220A834	CAPACITOR	1	
		C949	F1G1H220A834	CAPACITOR	1	
		C950	F1G1H220A834	CAPACITOR	1	
		C951	F1G1H220A834	CAPACITOR	1	
		C952	F1G1H220A834	CAPACITOR	1	
		C953	F1G1H220A834	CAPACITOR	1	
		C954	F1H1C105A167	CAPACITOR	1	
		C955	F1H1C105A167	CAPACITOR	1	
		C956	F1H1C105A167	CAPACITOR	1	
		C957	F1H1A225A051	CAPACITOR	1	
		C958	F1H1A225A051	CAPACITOR	1	
		C959	F1G1H220A834	CAPACITOR	1	
		C960	F1G0J1050007	CAPACITOR	1	
		C961	F1G0J1050007	CAPACITOR	1	
		C964	F1H0J2250008	CAPACITOR	1	
		C965	F1G0J1050007	CAPACITOR	1	
		C966	F1H1E105A144	CAPACITOR	1	
		C967	F1H1E105A144	CAPACITOR	1	
		C968	F1H1C105A167	CAPACITOR	1	
		C969	F1H1C105A167	CAPACITOR	1	
		C970	F1G0J1050007	CAPACITOR	1	
		C971	F1G0J1050007	CAPACITOR	1	
		C972	F1H1C105A167	CAPACITOR	1	
		C973	F1H1C105A167	CAPACITOR	1	
		C974	F1G1C104A119	CAPACITOR	1	
		C980	F1G0J1050007	CAPACITOR	1	
		C1171	F1J1C1060001	CAPACITOR	1	
		C1172	F1G1C223A146	CAPACITOR	1	
		C1173	F1G0J224A001	CAPACITOR	1	

		C1174	F1G0J1050007	CAPACITOR	1	

Model No. : HC-X1E/EE/PP/GC/GD Parts List

Change	Safety	Ref. No.	Part No.	Part Name & Description	Q'ty	Remarks
		C1211	F1G1C223A146	CAPACITOR	1	
		C1212	F1G1H222A830	CAPACITOR	1	
		C1213	F1J1C1060001	CAPACITOR	1	
		C1214	F1G1C104A119	CAPACITOR	1	
		C1215	F1J1A106A043	CAPACITOR	1	
		C1216	F1J1A106A043	CAPACITOR	1	
		C1217	F1J1A106A043	CAPACITOR	1	
		C1221	F1G1C223A146	CAPACITOR	1	
		C1222	F1G1H102A830	CAPACITOR	1	
		C1223	F1J1C1060001	CAPACITOR	1	
		C1224	F1G1C104A119	CAPACITOR	1	
		C1225	F1J0J2260004	CAPACITOR	1	
		C1226	F1J0J2260004	CAPACITOR	1	
		C1231	F1G1C223A146	CAPACITOR	1	
		C1232	F1G1H222A830	CAPACITOR	1	
		C1233	F1J1C1060001	CAPACITOR	1	
		C1234	F1G1C104A119	CAPACITOR	1	
		C1235	F1J0J2260004	CAPACITOR	1	
		C1236	F1J0J2260004	CAPACITOR	1	
		C1241	F1G1C223A146	CAPACITOR	1	
		C1242	F1G1H222A830	CAPACITOR	1	
		C1243	F1J1C1060001	CAPACITOR	1	
		C1245	F1G1C104A119	CAPACITOR	1	
		C1246	F1J1A106A043	CAPACITOR	1	
		C1247	F1J1A106A043	CAPACITOR	1	
		C1248	F1J1A106A043	CAPACITOR	1	
		C1261	F1G1C223A146	CAPACITOR	1	
		C1262	F1G1H222A830	CAPACITOR	1	
		C1263	F1J1C1060001	CAPACITOR	1	
		C1265	F1G1C104A119	CAPACITOR	1	
		C1266	F1J0J2260004	CAPACITOR	1	
		C1267	F1J0J2260004	CAPACITOR	1	
		C1271	F1G1E1030005	CAPACITOR	1	
		C1272	F1G1C104A119	CAPACITOR	1	
		C1273	F1H1C105A167	CAPACITOR	1	
		C1274	F1K2A105A006	CAPACITOR	1	
		C1275	F1K2A105A006	CAPACITOR	1	
		C1276	F1K2A105A006	CAPACITOR	1	
		C1312	F1H0J4750004	CAPACITOR	1	
		C1371	F1K2A105A006	CAPACITOR	1	
		C1372	F1K2A105A006	CAPACITOR	1	
		C1373	F1K2A105A006	CAPACITOR	1	
		C1411	F1G0J1050007	CAPACITOR	1	
		C1412	F1G0J1050007	CAPACITOR	1	
		C1413	F1G0J1050007	CAPACITOR	1	
		C1414	F1G0J1050007	CAPACITOR	1	
		C1415	F1G1E1030005	CAPACITOR	1	
		C1416	F1G0J1050007	CAPACITOR	1	
		C1421	F1G0J1050007	CAPACITOR	1	
		C1423	F1G0J1050007	CAPACITOR	1	
		C1431	F1H0J4750004	CAPACITOR	1	
		C1432	F1H0J4750004	CAPACITOR	1	
		C1433	F1H1C105A167	CAPACITOR	1	
		C1434	F1G1E1030005	CAPACITOR	1	
		C1435	F1H1C105A167	CAPACITOR	1	
		C1436	F1G1H472A571	CAPACITOR	1	
		C1452	F1J1A106A043	CAPACITOR	1	
		C1463	F1G0J1050007	CAPACITOR	1	
		C1501	F1H1E105A144	CAPACITOR	1	
		C1502	F1J1C1060001	CAPACITOR	1	
		C1504	F1G0J1050007	CAPACITOR	1	

		C1505	F1H1E105A144	CAPACITOR	1	

Model No. : HC-X1E/EE/PP/GC/GD Parts List

Change	Safety	Ref. No.	Part No.	Part Name & Description	Q'ty	Remarks
		C1506	F1H1E105A144	CAPACITOR	1	
		C1558	F1G1H222A830	CAPACITOR	1	
		C1605	F1H1C105A167	CAPACITOR	1	
		C1611	F1G0J1050007	CAPACITOR	1	
		C1612	F1G1E562A086	CAPACITOR	1	
		C1613	F1J1C1060001	CAPACITOR	1	
		C1614	F1G1C104A119	CAPACITOR	1	
		C1615	F1J0J2260004	CAPACITOR	1	
		C1616	F1J0J2260004	CAPACITOR	1	
		C1621	F1G1C223A146	CAPACITOR	1	
		C1622	F1G1H472A571	CAPACITOR	1	
		C1623	F1J1C1060001	CAPACITOR	1	
		C1624	F1G1C104A119	CAPACITOR	1	
		C1625	F1J0J2260004	CAPACITOR	1	
		C1626	F1J0J2260004	CAPACITOR	1	
		C1631	F1G0J1050007	CAPACITOR	1	
		C1632	F1G1E562A086	CAPACITOR	1	
		C1633	F1J1C1060001	CAPACITOR	1	
		C1634	F1G1C104A119	CAPACITOR	1	
		C1635	F1J0J2260004	CAPACITOR	1	
		C1636	F1J0J2260004	CAPACITOR	1	
		C1641	F1G0J1050007	CAPACITOR	1	
		C1642	F1G1E562A086	CAPACITOR	1	
		C1643	F1J1C1060001	CAPACITOR	1	
		C1644	F1G1C104A119	CAPACITOR	1	
		C1645	F1J0J2260004	CAPACITOR	1	
		C1646	F1J0J2260004	CAPACITOR	1	
		C1651	F1G0J1050007	CAPACITOR	1	
		C1652	F1G1E562A086	CAPACITOR	1	
		C1653	F1J1C1060001	CAPACITOR	1	
		C1654	F1G1C104A119	CAPACITOR	1	
		C1655	F1J0J2260004	CAPACITOR	1	
		C1656	F1J0J2260004	CAPACITOR	1	
		C1661	F1G0J1050007	CAPACITOR	1	
		C1662	F1G1E562A086	CAPACITOR	1	
		C1663	F1J1C1060001	CAPACITOR	1	
		C1665	F1G1C104A119	CAPACITOR	1	
		C1666	F1J0J2260004	CAPACITOR	1	
		C1667	F1J0J2260004	CAPACITOR	1	
		C1711	F1J1C475A059	CAPACITOR	1	
		C1712	F1G1H472A571	CAPACITOR	1	
		C1715	F1J1E4750002	CAPACITOR	1	
		C1770	F1H1C105A167	CAPACITOR	1	
		C1811	F1J1C475A059	CAPACITOR	1	
		C1812	F1H1C105A167	CAPACITOR	1	
		C1813	F1H1H104A748	CAPACITOR	1	
		C1814	F1K1H475A256	CAPACITOR	1	
		C2301	F1G1C104A119	CAPACITOR	1	
		C2302	F1G1C104A119	CAPACITOR	1	
		C2303	F1G1C104A119	CAPACITOR	1	
		C2304	F1G1C104A119	CAPACITOR	1	
		C2305	F1G1H6R0A833	CAPACITOR	1	
		C3101	F1K0J476A068	CAPACITOR	1	
		C3102	F1G0J474A001	CAPACITOR	1	
		C3103	F1G0J474A001	CAPACITOR	1	
		C3104	F1G0J474A001	CAPACITOR	1	
		C3105	F1H0J4750004	CAPACITOR	1	
		C3106	F1H0J4750004	CAPACITOR	1	
		C3107	F1H0J4750004	CAPACITOR	1	
		C3109	F1H0J4750004	CAPACITOR	1	
		C3110	F1H0J4750004	CAPACITOR	1	

		C3111	F1G0J474A001	CAPACITOR	1	

Model No. : HC-X1E/EE/PP/GC/GD Parts List

Change	Safety	Ref. No.	Part No.	Part Name & Description	Q'ty	Remarks
		C3112	F1G0J474A001	CAPACITOR	1	
		C3113	F1G1C104A119	CAPACITOR	1	
		C3114	F1G1C104A119	CAPACITOR	1	
		C3116	F1G1C104A119	CAPACITOR	1	
		C3117	F1G1C104A119	CAPACITOR	1	
		C3118	F1G0J474A001	CAPACITOR	1	
		C3119	F1G1C104A119	CAPACITOR	1	
		C3120	F1G1C104A119	CAPACITOR	1	
		C3122	F1G1C104A119	CAPACITOR	1	
		C3123	F1G1C104A119	CAPACITOR	1	
		C3126	F1G1C104A119	CAPACITOR	1	
		C3128	F1G1C104A119	CAPACITOR	1	
		C3129	F1G1C104A119	CAPACITOR	1	
		C3130	F1G1H102A830	CAPACITOR	1	
		C3138	F1G1C104A119	CAPACITOR	1	
		C3145	F1G1H102A830	CAPACITOR	1	
		C3154	F1G1C104A119	CAPACITOR	1	
		C3159	F1G1C104A119	CAPACITOR	1	
		C3161	F1J1A106A043	CAPACITOR	1	
		C3162	F1G1C104A119	CAPACITOR	1	
		C3165	F1G1C104A119	CAPACITOR	1	
		C3166	F1G1C104A119	CAPACITOR	1	
		C3167	F1G1C104A119	CAPACITOR	1	
		C3168	F1H0J4750004	CAPACITOR	1	
		C3169	F1H0J4750004	CAPACITOR	1	
		C3170	F1G1C104A119	CAPACITOR	1	
		C3171	F1G1C104A119	CAPACITOR	1	
		C3172	F1G1C104A119	CAPACITOR	1	
		C3173	F1G1C104A119	CAPACITOR	1	
		C3175	F1G1C104A119	CAPACITOR	1	
		C3176	F1G1C104A119	CAPACITOR	1	
		C3177	F1G1C104A119	CAPACITOR	1	
		C3178	F1G1C104A119	CAPACITOR	1	
		C3211	F1G1C104A119	CAPACITOR	1	
		C3213	F1G1C104A119	CAPACITOR	1	
		C3303	F1H0J4750004	CAPACITOR	1	
		C3304	F1H0J4750004	CAPACITOR	1	
		C3305	F1G1E1030005	CAPACITOR	1	
		C3306	F1G1E1030005	CAPACITOR	1	
		C3309	F1H0J4750004	CAPACITOR	1	
		C3310	F1H0J4750004	CAPACITOR	1	
		C3351	F1G1C104A119	CAPACITOR	1	
		C3352	F1G1C104A119	CAPACITOR	1	
		C3353	F1G1C104A119	CAPACITOR	1	
		C3354	F1G1C104A119	CAPACITOR	1	
		C3355	F1G1C104A119	CAPACITOR	1	
		C3356	F1G1C104A119	CAPACITOR	1	
		C3401	F1J1A106A043	CAPACITOR	1	
		C3402	F1J1A106A043	CAPACITOR	1	
		C3403	F1J1A106A043	CAPACITOR	1	
		C3404	F1G1C104A119	CAPACITOR	1	
		C3405	F1G1C104A119	CAPACITOR	1	
		C3406	F1G1C104A119	CAPACITOR	1	
		C3407	F1G1C104A119	CAPACITOR	1	
		C3408	F1G0J1050007	CAPACITOR	1	
		C3409	F1G1H102A830	CAPACITOR	1	
		C3410	F1G1C104A119	CAPACITOR	1	
		C3411	F1G1C104A119	CAPACITOR	1	
		C3412	F1G1C104A119	CAPACITOR	1	
		C3413	F1J1A106A043	CAPACITOR	1	
		C3414	F1G1C104A119	CAPACITOR	1	

		C3415	F1J1A106A043	CAPACITOR	1	

Model No. : HC-X1E/EE/PP/GC/GD Parts List

Change	Safety	Ref. No.	Part No.	Part Name & Description	Q'ty	Remarks
		C3416	F1G1C104A119	CAPACITOR	1	
		C3417	F1G1C104A119	CAPACITOR	1	
		C3418	F1G1C104A119	CAPACITOR	1	
		C3419	F1G1C104A119	CAPACITOR	1	
		C3420	F1J0J2260004	CAPACITOR	1	
		C3421	F1G1C104A119	CAPACITOR	1	
		C3422	F1L0J1070012	CAPACITOR	1	
		C3423	F1G0J1050007	CAPACITOR	1	
		C3424	F1G1C104A119	CAPACITOR	1	
		C3425	F1G1C104A119	CAPACITOR	1	
		C3426	F1G1E682A144	CAPACITOR	1	
		C3427	F1G1C104A119	CAPACITOR	1	
		C3428	F1G1C104A119	CAPACITOR	1	
		C3429	F1G1C104A119	CAPACITOR	1	
		C3430	F1G1C104A119	CAPACITOR	1	
		C3431	F1G1C104A119	CAPACITOR	1	
		C3432	F1H0J4750004	CAPACITOR	1	
		C3433	F1G1C104A119	CAPACITOR	1	
		C3434	F1G1C104A119	CAPACITOR	1	
		C3435	F1J1A106A043	CAPACITOR	1	
		C3436	F1G1C104A119	CAPACITOR	1	
		C3437	F1G1C104A119	CAPACITOR	1	
		C3438	F1G1C104A119	CAPACITOR	1	
		C3439	F1J1A106A043	CAPACITOR	1	
		C3440	F1G1C104A119	CAPACITOR	1	
		C3441	F1G1E1030005	CAPACITOR	1	
		C3442	F1J0J2260004	CAPACITOR	1	
		C3443	F1G0J1050007	CAPACITOR	1	
		C3444	F1G1C104A119	CAPACITOR	1	
		C3445	F1G1E1030005	CAPACITOR	1	
		C3446	F1G1E1030005	CAPACITOR	1	
		C3447	F1G0J1050007	CAPACITOR	1	
		C3448	F1G1E1030005	CAPACITOR	1	
		C3449	F1G1C104A119	CAPACITOR	1	
		C3450	F1G1C104A119	CAPACITOR	1	
		C3451	F1G1C104A119	CAPACITOR	1	
		C3452	F1G1C104A119	CAPACITOR	1	
		C3453	F1G1E1030005	CAPACITOR	1	
		C3454	F1G1C104A119	CAPACITOR	1	
		C3455	F1G1E1030005	CAPACITOR	1	
		C3456	F1G1C104A119	CAPACITOR	1	
		C3457	F1G1E1030005	CAPACITOR	1	
		C3458	F1G1E1030005	CAPACITOR	1	
		C3459	F1G1C104A119	CAPACITOR	1	
		C3460	F1G1C104A119	CAPACITOR	1	
		C3461	F1G1E1030005	CAPACITOR	1	
		C3462	F1G1C104A119	CAPACITOR	1	
		C3463	F1G1C104A119	CAPACITOR	1	
		C3464	F1J1A106A043	CAPACITOR	1	
		C3465	F1G1C104A119	CAPACITOR	1	
		C3466	F1G0J1050007	CAPACITOR	1	
		C3467	F1G1E1030005	CAPACITOR	1	
		C3468	F1G1E1030005	CAPACITOR	1	
		C3469	F1J1A106A043	CAPACITOR	1	
		C3470	F1G1C104A119	CAPACITOR	1	
		C3471	F1G1C104A119	CAPACITOR	1	
		C3472	F1G1C104A119	CAPACITOR	1	
		C3473	F1G1C104A119	CAPACITOR	1	
		C3474	F1G1E1030005	CAPACITOR	1	
		C3475	F1L0J1070012	CAPACITOR	1	
		C3476	F1J0J2260004	CAPACITOR	1	

		C3477	F1J1A106A043	CAPACITOR	1	

Model No. : HC-X1E/EE/PP/GC/GD Parts List

Change	Safety	Ref. No.	Part No.	Part Name & Description	Q'ty	Remarks
		C3478	F1G1C104A119	CAPACITOR	1	
		C3479	F1J1A106A043	CAPACITOR	1	
		C3480	F1G0J1050007	CAPACITOR	1	
		C3481	F1G1C104A119	CAPACITOR	1	
		C3482	F1G1C104A119	CAPACITOR	1	
		C3483	F1H0J4750004	CAPACITOR	1	
		C3484	F1G1E1030005	CAPACITOR	1	
		C3485	F1G1E1030005	CAPACITOR	1	
		C3486	F1G1C104A119	CAPACITOR	1	
		C3487	F1G0J1050007	CAPACITOR	1	
		C3488	F1G1C104A119	CAPACITOR	1	
		C3489	F1J1A106A043	CAPACITOR	1	
		C3490	F1J1A106A043	CAPACITOR	1	
		C3491	F1H0J4750004	CAPACITOR	1	
		C3493	F1J1A106A043	CAPACITOR	1	
		C3494	F1G1C104A119	CAPACITOR	1	
		C3495	F1G1C104A119	CAPACITOR	1	
		C3497	F1J0J2260004	CAPACITOR	1	
		C3501	F1L0J1070012	CAPACITOR	1	
		C3502	F1J1A106A043	CAPACITOR	1	
		C3503	F1J1A106A043	CAPACITOR	1	
		C3504	F1J1A106A043	CAPACITOR	1	
		C3505	F1J1A106A043	CAPACITOR	1	
		C3506	F1J1A106A043	CAPACITOR	1	
		C3507	F1J1A106A043	CAPACITOR	1	
		C3508	F1J1A106A043	CAPACITOR	1	
		C3509	F1G1C104A119	CAPACITOR	1	
		C3510	F1G1C104A119	CAPACITOR	1	
		C3511	F1G1C104A119	CAPACITOR	1	
		C3512	F1G1C104A119	CAPACITOR	1	
		C3513	F1G1C104A119	CAPACITOR	1	
		C3514	F1G1C104A119	CAPACITOR	1	
		C3515	F1G1C104A119	CAPACITOR	1	
		C3516	F1G1H102A830	CAPACITOR	1	
		C3518	F1H0J4750004	CAPACITOR	1	
		C3519	F1G0J1050007	CAPACITOR	1	
		C3520	F1H0J4750004	CAPACITOR	1	
		C3521	F1G0J1050007	CAPACITOR	1	
		C3522	F1G1C104A119	CAPACITOR	1	
		C3523	F1J1A106A043	CAPACITOR	1	
		C3524	F1J1A106A043	CAPACITOR	1	
		C3525	F1G0J1050007	CAPACITOR	1	
		C3526	F1G1C104A119	CAPACITOR	1	
		C3527	F1G1C104A119	CAPACITOR	1	
		C3528	F1G1C104A119	CAPACITOR	1	
		C3529	F1G1C104A119	CAPACITOR	1	
		C3530	F1G1C104A119	CAPACITOR	1	
		C3531	F1H0J4750004	CAPACITOR	1	
		C3532	F1G1C104A119	CAPACITOR	1	
		C3533	F1G1C104A119	CAPACITOR	1	
		C3534	F1G1C104A119	CAPACITOR	1	
		C3535	F1G1C104A119	CAPACITOR	1	
		C3536	F1G1C104A119	CAPACITOR	1	
		C3537	F1G1C104A119	CAPACITOR	1	
		C3538	F1J0J2260004	CAPACITOR	1	
		C3539	F1J1A106A043	CAPACITOR	1	
		C3540	F1G0J1050007	CAPACITOR	1	
		C3541	F1G0J1050007	CAPACITOR	1	
		C3542	F1G0J1050007	CAPACITOR	1	
		C3543	F1G1H332A830	CAPACITOR	1	
		C3544	F1G1H332A830	CAPACITOR	1	

		C3545	F1G1C104A119	CAPACITOR	1	

Model No. : HC-X1E/EE/PP/GC/GD Parts List

Change	Safety	Ref. No.	Part No.	Part Name & Description	Q'ty	Remarks
		C3546	F1G1C104A119	CAPACITOR	1	
		C3547	F1G1C104A119	CAPACITOR	1	
		C3548	F1G1C104A119	CAPACITOR	1	
		C3549	F1G1C104A119	CAPACITOR	1	
		C3550	F1G1C104A119	CAPACITOR	1	
		C3551	F1G1C104A119	CAPACITOR	1	
		C3552	F1G1C104A119	CAPACITOR	1	
		C3553	F1G1C104A119	CAPACITOR	1	
		C3554	F1G1C104A119	CAPACITOR	1	
		C3555	F1G1C104A119	CAPACITOR	1	
		C3556	F1G1C104A119	CAPACITOR	1	
		C3557	F1H0J4750004	CAPACITOR	1	
		C3558	F1G1C104A119	CAPACITOR	1	
		C3559	F1J0J2260004	CAPACITOR	1	
		C3560	F1G1H332A830	CAPACITOR	1	
		C3561	F1G1H332A830	CAPACITOR	1	
		C3707	F1J0J2260004	CAPACITOR	1	
		C3708	F1J0J2260004	CAPACITOR	1	
		C3709	F1J0J2260004	CAPACITOR	1	
		C3710	F1G0J1050007	CAPACITOR	1	
		C3711	F1G1C104A119	CAPACITOR	1	
		C3712	F1H0J2250008	CAPACITOR	1	
		C3713	F1H0J2250008	CAPACITOR	1	
		C3714	F1G0J224A001	CAPACITOR	1	
		C3715	F1G0J224A001	CAPACITOR	1	
		C3716	F1G0J1050007	CAPACITOR	1	
		C3717	F1G0J1050007	CAPACITOR	1	
		C3731	F1J0J2260004	CAPACITOR	1	
		C3732	F1J0J2260004	CAPACITOR	1	
		C3733	F1J0J2260004	CAPACITOR	1	
		C3734	F1J0J2260004	CAPACITOR	1	
		C3740	F1G1E1030005	CAPACITOR	1	
		C3741	F1G1E1030005	CAPACITOR	1	
		C3742	F1G1H102A830	CAPACITOR	1	
		C3743	F1G1H102A830	CAPACITOR	1	
		C3744	F1J1C1060001	CAPACITOR	1	
		C3801	F1G1C104A119	CAPACITOR	1	
		C3802	F1G0J1050007	CAPACITOR	1	
		C3803	F1G0J1050007	CAPACITOR	1	
		C3804	F1G1C104A119	CAPACITOR	1	
		C3805	F1G1C104A119	CAPACITOR	1	
		C3806	F1G1C104A119	CAPACITOR	1	
		C3807	F1G0J1050007	CAPACITOR	1	
		C3808	F1G0J1050007	CAPACITOR	1	
		C3809	F1G1C104A119	CAPACITOR	1	
		C3810	F1G1C104A119	CAPACITOR	1	
		C3811	F1G1C104A119	CAPACITOR	1	
		C3812	F1G1C104A119	CAPACITOR	1	
		C3813	F1G1C104A119	CAPACITOR	1	
		C3814	F1G1C104A119	CAPACITOR	1	
		C3815	F1G1H102A830	CAPACITOR	1	
		C3816	F1G1C104A119	CAPACITOR	1	
		C3817	F1G1C104A119	CAPACITOR	1	
		C3818	F1G1C104A119	CAPACITOR	1	
		C3819	F1G1C104A119	CAPACITOR	1	
		C3820	F1G1C104A119	CAPACITOR	1	
		C3821	F1G1C104A119	CAPACITOR	1	
		C3822	F1G1C104A119	CAPACITOR	1	
		C3823	F1J1A106A043	CAPACITOR	1	
		C3824	F1G1C104A119	CAPACITOR	1	
		C3825	F1G1C104A119	CAPACITOR	1	

		C3826	F1G1C104A119	CAPACITOR	1	

Model No. : HC-X1E/EE/PP/GC/GD Parts List

Change	Safety	Ref. No.	Part No.	Part Name & Description	Q'ty	Remarks
		C3827	F1G1C104A119	CAPACITOR	1	
		C3828	F1G1C104A119	CAPACITOR	1	
		C3830	F1G0J1050007	CAPACITOR	1	
		C3832	F1G0J1050007	CAPACITOR	1	
		C3833	F1G0J1050007	CAPACITOR	1	
		C3834	F1G1C104A119	CAPACITOR	1	
		C3835	F1G1C104A119	CAPACITOR	1	
		C3836	F1G0J1050007	CAPACITOR	1	
		C3838	F1G0J1050007	CAPACITOR	1	
		C3840	F1G0J1050007	CAPACITOR	1	
		C3842	F1G1C104A119	CAPACITOR	1	
		C3844	F1G0J1050007	CAPACITOR	1	
		C3846	F1G0J1050007	CAPACITOR	1	
		C3848	F1G1C104A119	CAPACITOR	1	
		C3850	F1G0J1050007	CAPACITOR	1	
		C4034	F1G1C104A119	CAPACITOR	1	
		C4301	F1G1C104A119	CAPACITOR	1	
		C4302	F1J1C1060001	CAPACITOR	1	
		C4305	F1G1H330A834	CAPACITOR	1	
		C4306	F1G1H330A834	CAPACITOR	1	
		C4307	F1G1C104A119	CAPACITOR	1	
		C4308	F1G1C104A119	CAPACITOR	1	
		C4313	F1G1C104A119	CAPACITOR	1	
		C4314	F1J1C1060001	CAPACITOR	1	
		C4315	F1G1C104A119	CAPACITOR	1	
		C4316	F1G1E1040001	CAPACITOR	1	
		C4317	F1G1C104A119	CAPACITOR	1	
		C4318	F1H1E105A144	CAPACITOR	1	
		C4319	F1G1C104A119	CAPACITOR	1	
		C4320	F1G1C104A119	CAPACITOR	1	
		C4321	F1G1H471A830	CAPACITOR	1	
		C4322	F1G1H471A830	CAPACITOR	1	
		C4323	F1G1H470A834	CAPACITOR	1	
		C4324	F1G1H471A830	CAPACITOR	1	
		C4325	F1G1H470A834	CAPACITOR	1	
		C4326	F1G1H471A830	CAPACITOR	1	
		C4399	F1J1C1060001	CAPACITOR	1	
		C4501	F1J1C1060001	CAPACITOR	1	
		C4502	F1J1C1060001	CAPACITOR	1	
		C4503	F1J1C1060001	CAPACITOR	1	
		C4504	F1J1C1060001	CAPACITOR	1	
		C4505	F1J1C1060001	CAPACITOR	1	
		C4506	F1J1C1060001	CAPACITOR	1	
		C4507	F1J1C1060001	CAPACITOR	1	
		C4508	F1J1C1060001	CAPACITOR	1	
		C4509	F1J1C1060001	CAPACITOR	1	
		C4510	F1J1C1060001	CAPACITOR	1	
		C4511	F1J1C1060001	CAPACITOR	1	
		C4512	F1J1C1060001	CAPACITOR	1	
		C4513	F1G1C104A119	CAPACITOR	1	
		C4514	F1G1C104A119	CAPACITOR	1	
		C4515	F1G1C104A119	CAPACITOR	1	
		C4516	F1G1C104A119	CAPACITOR	1	
		C4517	F1G1C104A119	CAPACITOR	1	
		C4518	F1G1C104A119	CAPACITOR	1	
		C4519	F1G1C104A119	CAPACITOR	1	
		C4520	F1G1C104A119	CAPACITOR	1	
		C4521	F1G1C104A119	CAPACITOR	1	
		C4522	F1J1A106A043	CAPACITOR	1	
		C4523	F1J1A106A043	CAPACITOR	1	
		C4524	F1G1C104A119	CAPACITOR	1	

		C4525	F1G1C104A119	CAPACITOR	1	

Model No. : HC-X1E/EE/PP/GC/GD Parts List

Change	Safety	Ref. No.	Part No.	Part Name & Description	Q'ty	Remarks
		C4526	F1J1A106A043	CAPACITOR	1	
		C4527	F1G1C104A119	CAPACITOR	1	
		C4528	F1J1C1060001	CAPACITOR	1	
		C4529	F1G1C104A119	CAPACITOR	1	
		C4531	F1G1E1040001	CAPACITOR	1	
		C4532	F1H1E105A144	CAPACITOR	1	
		C4533	F1J1C1060001	CAPACITOR	1	
		C4534	F1J1C1060001	CAPACITOR	1	
		C4535	F1J1C1060001	CAPACITOR	1	
		C4536	F1J1C1060001	CAPACITOR	1	
		C4603	F1G0J1050007	CAPACITOR	1	
		C4604	F1G0J1050007	CAPACITOR	1	
		C4605	F1G0J1050007	CAPACITOR	1	
		C4606	F1J0J2260004	CAPACITOR	1	
		C4607	F1J0J2260004	CAPACITOR	1	
		C4608	F1G1C104A119	CAPACITOR	1	
		C4610	F1G0J1050007	CAPACITOR	1	
		C4611	F1G1H102A830	CAPACITOR	1	
		C4613	F1G1H102A830	CAPACITOR	1	
		C4615	F1G1C104A119	CAPACITOR	1	
		C4616	F1G1C104A119	CAPACITOR	1	
		C4617	F1G1C104A119	CAPACITOR	1	
		C4651	F1G0J1050007	CAPACITOR	1	
		C4654	F1G0J1050007	CAPACITOR	1	
		C4801	F1G1E1030005	CAPACITOR	1	
		C4802	F1G1E1030005	CAPACITOR	1	
		C4803	F1G1C104A119	CAPACITOR	1	
		C4804	F1G1C104A119	CAPACITOR	1	
		C4805	F1G1H330A834	CAPACITOR	1	
		C4806	F1G1H102A830	CAPACITOR	1	
		C4807	F1G1H330A834	CAPACITOR	1	
		C4808	F1G1H102A830	CAPACITOR	1	
		C4809	F1G1C104A119	CAPACITOR	1	
		C4810	F1G1A473A032	CAPACITOR	1	
		C4811	F1G0J224A001	CAPACITOR	1	
		C4812	F1G0J1050007	CAPACITOR	1	
		C4813	F1G1H472A571	CAPACITOR	1	
		C4814	F1J0J2260004	CAPACITOR	1	
		C4815	F1G1H330A834	CAPACITOR	1	
		C4816	F1G1C104A119	CAPACITOR	1	
		C4817	F1G1C104A119	CAPACITOR	1	
		C4818	F1G1C104A119	CAPACITOR	1	
		C4819	F1G1C104A119	CAPACITOR	1	
		C4820	F1G1C104A119	CAPACITOR	1	
		C4821	F1G1E1030005	CAPACITOR	1	
		C4822	F1G1E1030005	CAPACITOR	1	
		C4823	F1G1H102A830	CAPACITOR	1	
		C4824	F1G1H330A834	CAPACITOR	1	
		C4825	F1G1H102A830	CAPACITOR	1	
		C4826	F1J0J2260004	CAPACITOR	1	
		C4827	F1G1H330A834	CAPACITOR	1	
		C4828	F1G1C104A119	CAPACITOR	1	
		C4829	F1G1C104A119	CAPACITOR	1	
		C4830	F1G0J224A001	CAPACITOR	1	
		C4831	F1J0J2260004	CAPACITOR	1	
		C4832	F1G1A473A032	CAPACITOR	1	
		C4833	F1G0J1050007	CAPACITOR	1	
		C4834	F1G1C104A119	CAPACITOR	1	
		C4835	F1G1H472A571	CAPACITOR	1	
		C4836	F1G1H330A834	CAPACITOR	1	
		C4837	F1G1C104A119	CAPACITOR	1	

		C4838	F1G0J1050007	CAPACITOR	1	

Model No. : HC-X1E/EE/PP/GC/GD Parts List

Change	Safety	Ref. No.	Part No.	Part Name & Description	Q'ty	Remarks
		C4839	F1G0J1050007	CAPACITOR	1	
		C4840	F1G0J1050007	CAPACITOR	1	
		C4841	F1G0J1050007	CAPACITOR	1	
		C6001	F1H1C105A167	CAPACITOR	1	
		C6002	F1G1C104A119	CAPACITOR	1	
		C6003	F1G1C104A119	CAPACITOR	1	
		C6004	F1G1C104A119	CAPACITOR	1	
		C6005	F1G1C104A119	CAPACITOR	1	
		C6007	F1G1C104A119	CAPACITOR	1	
		C6009	F1G1C104A119	CAPACITOR	1	
		C6010	F1G1E1040001	CAPACITOR	1	
		C6011	F1H1H104A748	CAPACITOR	1	
		C6013	F1G1H221A830	CAPACITOR	1	
		C6014	F1G1C104A119	CAPACITOR	1	
		C6015	F1J1A106A043	CAPACITOR	1	
		C6016	F1H2A103A002	CAPACITOR	1	
		C6020	F1J1A106A043	CAPACITOR	1	
		C6021	F1H1C105A167	CAPACITOR	1	
		C6022	F1H1C105A167	CAPACITOR	1	
		C6024	F1G1C104A119	CAPACITOR	1	
		C6025	F1G0J1050007	CAPACITOR	1	
		C6029	F1G1C104A119	CAPACITOR	1	
		C6034	F1G0J1050007	CAPACITOR	1	
		C6302	F1J1A106A043	CAPACITOR	1	
		C6304	F1G1C104A119	CAPACITOR	1	
		C6305	F1G1C104A119	CAPACITOR	1	
		C6306	F1G1C104A119	CAPACITOR	1	
		C6307	F1G0J1050007	CAPACITOR	1	
		C6310	F1G0J1050007	CAPACITOR	1	
		C6702	F1G1C104A119	CAPACITOR	1	
		C6703	F1G1C104A119	CAPACITOR	1	
		C6704	F1J2A104A023	CAPACITOR	1	
		C6706	F1H1H103A219	CAPACITOR	1	
		C6707	F1G1C104A119	CAPACITOR	1	
		C6715	F1G1H101A948	CAPACITOR	1	
		C6717	F1H1H104A748	CAPACITOR	1	
		C6719	F1G1C104A119	CAPACITOR	1	
		C6721	F1G1C104A119	CAPACITOR	1	
		C6727	F1G1C104A119	CAPACITOR	1	
		C6728	F1G1C104A119	CAPACITOR	1	
		C6826	F1G1E1030005	CAPACITOR	1	
		C6827	F1G1E1030005	CAPACITOR	1	
		C6828	F1G1E1030005	CAPACITOR	1	
		C6829	F1G1E1030005	CAPACITOR	1	
		C6830	F1G1E1030005	CAPACITOR	1	
		C6831	F1G1E1030005	CAPACITOR	1	
		C6832	F1G1C104A119	CAPACITOR	1	
		C6833	F1G1C104A119	CAPACITOR	1	
		C6834	F1G1C104A119	CAPACITOR	1	
		C6835	F1G1H472A571	CAPACITOR	1	
		C6836	F1G1H472A571	CAPACITOR	1	
		C6851	F1H1E105A144	CAPACITOR	1	
		C6861	F1G1E1030005	CAPACITOR	1	
		C6862	F1G1E1030005	CAPACITOR	1	
		C6863	F1G1C104A119	CAPACITOR	1	
		C6952	F1G1C104A119	CAPACITOR	1	
		C6953	F1G1C104A119	CAPACITOR	1	
		C6954	F1G1C104A119	CAPACITOR	1	
		C6955	F1G1C104A119	CAPACITOR	1	
		C6956	F1G1E1030005	CAPACITOR	1	
		C6957	F1G1E1030005	CAPACITOR	1	

		C6958	F1G1E1030005	CAPACITOR	1	

Model No. : HC-X1E/EE/PP/GC/GD Parts List

Change	Safety	Ref. No.	Part No.	Part Name & Description	Q'ty	Remarks
		C6959	F1G1E1030005	CAPACITOR	1	
		C6960	F1G1E1030005	CAPACITOR	1	
		C6961	F1G1E1030005	CAPACITOR	1	
		C6962	F1G1E1030005	CAPACITOR	1	
		C6963	F1G1E1030005	CAPACITOR	1	
		C6964	F1G1C104A119	CAPACITOR	1	
		C6965	F1G1E1030005	CAPACITOR	1	
		C6966	F1G1E1030005	CAPACITOR	1	
		C6967	F1G1E1030005	CAPACITOR	1	
		C6968	F1G1E1030005	CAPACITOR	1	
		C6969	F1G1E1030005	CAPACITOR	1	
		C6970	F1G1E1030005	CAPACITOR	1	
		C6971	F1G1E1030005	CAPACITOR	1	
		C6972	F1G1E1030005	CAPACITOR	1	
		C6973	F1G1C104A119	CAPACITOR	1	
		C6974	F1G1C104A119	CAPACITOR	1	
		C6975	F1G1E1030005	CAPACITOR	1	
		C6976	F1G1C104A119	CAPACITOR	1	
		C6977	F1G1E1030005	CAPACITOR	1	
		C6978	F1G1C104A119	CAPACITOR	1	
		C6979	F1G1C104A119	CAPACITOR	1	
		C6980	F1G1C104A119	CAPACITOR	1	
		D901	DZ2J360M0L	DIODE	1	E.S.D.
		D902	B3AFB0000645	LED	1	E.S.D.
		D903	B3AFB0000645	LED	1	E.S.D.
		D904	B3AFB0000645	LED	1	E.S.D.
		D905	B3AFB0000645	LED	1	E.S.D.
		D906	B3AFB0000645	LED	1	E.S.D.
		D907	B3AFB0000645	LED	1	E.S.D.
		D908	B3AFB0000645	LED	1	E.S.D.
		D909	B3AFB0000645	LED	1	E.S.D.
		D910	B3AFB0000645	LED	1	E.S.D.
		D911	B3AFB0000645	LED	1	E.S.D.
		D912	B0JCDD000001	DIODE	1	E.S.D.
		D914	B0JCDD000001	DIODE	1	E.S.D.
		D915	B0JCDD000001	DIODE	1	E.S.D.
		D1171	B0ADCJ000097	DIODE	1	E.S.D.
		D1271	B0ECKM000038	DIODE	1	E.S.D.
		D1451	DZ2J075M0L	DIODE	1	E.S.D.
		D1501	B0JCPE000038	DIODE	1	E.S.D.
		D1502	DZ2J150M0L	DIODE	1	E.S.D.
		D1504	DB2S31100L	DIODE	1	E.S.D.
		D1711	DB2J31700L	DIODE	1	E.S.D.
		D1811	B0JCMG000016	DIODE	1	E.S.D.
		D2301	DB2S31100L	DIODE	1	E.S.D.
		D2302	DZ2J100M0L	DIODE	1	E.S.D.
		D4301	DA3J101F0L	DIODE	1	E.S.D.
		D4302	DA3J101F0L	DIODE	1	E.S.D.
		D4303	DA3J101F0L	DIODE	1	E.S.D.
		D4304	DA3J101F0L	DIODE	1	E.S.D.
		D4305	DB2S31100L	DIODE	1	E.S.D.
		D6701	B3AAB0000343	LED	1	E.S.D.
		ET6001	K4AD01D00008	TERMINAL	1	
		ET6002	K4AD01D00008	TERMINAL	1	
		ET6003	K4AD01D00011	TERMINAL	1	
		ET6004	K4AD01D00011	TERMINAL	1	
		ET6005	K4AD01D00011	TERMINAL	1	
		ET6006	K4AD01D00011	TERMINAL	1	
		FL3401	EXC28CH900U	FILTER	1	
		FL3402	EXC28CH900U	FILTER	1	
		FL3403	F1H0J105A037	CAPACITOR	1	

		FL3501	EXC28CH900U	FILTER	1	

Model No. : HC-X1E/EE/PP/GC/GD Parts List

Change	Safety	Ref. No.	Part No.	Part Name & Description	Q'ty	Remarks
		FL3502	EXC28CH900U	FILTER	1	
		FL3503	F1H0J105A037	CAPACITOR	1	
		FL3801	EXC28CH900U	FILTER	1	
		FL3802	EXC28CH900U	FILTER	1	
		FL6005	EXC14CE900	FILTER	1	
		FL6006	EXC14CE900	FILTER	1	
		FL6007	EXC14CE900	FILTER	1	
		FL6851	J0ZZB0000196	FILTER	1	
		FP301	K1MY61BA0647	CONNECTOR 61P	1	
		FP302	K1MY29BA0556	CONNECTOR 29P	1	
		FP901	K1MY18BA0633	CONNECTOR 18P	1	
		FP902	K1MY12BA0633	CONNECTOR 12P	1	
		FP904	K1MN57BA0047	CONNECTOR 57P	1	
		FP905	K1MY04BA0633	CONNECTOR 4P	1	
		FP4001	K1MY14BA0641	CONNECTOR 14P	1	
		FP6001	K1MN06A00065	CONNECTOR 6P	1	
		FP6002	K1MY14BA0641	CONNECTOR 14P	1	
		FP6003	K1MN08A00072	CONNECTOR 8P	1	
		FP6004	K1MN16A00077	CONNECTOR 16P	1	
		FP6006	K1MN18A00064	CONNECTOR 18P	1	
		FP6008	K1MY26BA0633	CONNECTOR 26P	1	
		FP6009	K1MY30BA0633	CONNECTOR 30P	1	
		FP6010	K1MY51BA0575	CONNECTOR 51P	1	
		FP6011	K1MY12BA0641	CONNECTOR 12P	1	
		FP6022	K1MN28A00042	CONNECTOR 28P	1	
		FP6301	K1MY12BA0641	CONNECTOR 12P	1	
		FP6708	K1MY26BA0633	CONNECTOR 26P	1	
		FP6710	K1MY14BA0641	CONNECTOR 14P	1	
		FP6712	K1MY10BA0641	CONNECTOR 10P	1	
		FP6713	K1MY30BA0633	CONNECTOR 30P	1	
		FP6714	K1MY30BA0633	CONNECTOR 30P	1	
		FP6716	K1MY06BA0633	CONNECTOR 6P	1	
		FP6826	K1MY28BA0641	CONNECTOR 28P	1	
		FP6827	K1MY08BA0641	CONNECTOR 8P	1	
		FP6828	K1MY14BA0641	CONNECTOR 14P	1	
		FP6851	K1MN08A00072	CONNECTOR 8P	1	
		FP6951	K1MY14BA0641	CONNECTOR 14P	1	
		FP6952	K1MY04BA0641	CONNECTOR 4P	1	
		FP6953	K1MY06BA0641	CONNECTOR 6P	1	
		IC301	C0DBGYY02122	IC	1	E.S.D.
		IC302	C0DBGYY02110	IC	1	E.S.D.
		IC401	DV91000025A	IC	1	E.S.D.
		IC402	EWTS9RCL1A	IC	1	E.S.D.
		IC403	C0ABGA000035	IC	1	E.S.D.
		IC404	C0JBAE000508	IC	1	E.S.D.
		IC701	C1AB00003719	IC	1	E.S.D.
		IC703	C0DBGYY00909	IC	1	E.S.D.
		IC704	C0DBGYY00936	IC	1	E.S.D.
		IC706	C0GBC0000028	IC	1	E.S.D.
		IC708	C0GBY0000242	IC	1	E.S.D.
		IC709	C1AB00003450	IC	1	E.S.D.
		IC710	C0GBF0000016	IC	1	E.S.D.
		IC711	C0ABCA000121	IC	1	E.S.D.
		IC712	C0ABBA000025	IC	1	E.S.D.
		IC713	C0ABHA000054	IC	1	E.S.D.
		IC714	C0ABBA000201	IC	1	E.S.D.
		IC715	C0ABBA000025	IC	1	E.S.D.
		IC716	C0ABBA000025	IC	1	E.S.D.
		IC717	C0GBY0000242	IC	1	E.S.D.
		IC718	C0JBAB001130	IC	1	E.S.D.
		IC901	C1CB00002847	IC	1	E.S.D.

		IC902	C1AB00003791	IC	1	E.S.D.

Model No. : HC-X1E/EE/PP/GC/GD Parts List

Change	Safety	Ref. No.	Part No.	Part Name & Description	Q'ty	Remarks
		IC903	C1ZBZ0004521	IC	1	E.S.D.
		IC1211	C0DBAYY01300	IC	1	E.S.D.
		IC1221	C0DBAYY01300	IC	1	E.S.D.
		IC1231	C0DBAYY01644	IC	1	E.S.D.
		IC1241	C0DBAYY01644	IC	1	E.S.D.
		IC1261	C0DBAYY01644	IC	1	E.S.D.
		IC1271	C0DBAYY00386	IC	1	E.S.D.
		IC1411	C0DBGYY02186	IC	1	E.S.D.
		IC1412	C0DBGYY00977	IC	1	E.S.D.
		IC1413	C0DBGYY03536	IC	1	E.S.D.
		IC1414	C0DBGYY03719	IC	1	E.S.D.
		IC1421	C0DBGYY02589	IC	1	E.S.D.
		IC1423	C0CBCYY00043	IC	1	E.S.D.
		IC1431	C0DBGYY06014	IC	1	E.S.D.
		IC1432	C0DBGYY06012	IC	1	E.S.D.
		IC1451	C0DBZYY00723	IC	1	E.S.D.
		IC1463	C0DBGYY00938	IC	1	E.S.D.
		IC1501	C0EBK0000066	IC	1	E.S.D.
		IC1551	C0DBZYY00832	IC	1	E.S.D.
		IC1611	C0DBAYY01645	IC	1	E.S.D.
		IC1621	C0DBAYY01644	IC	1	E.S.D.
		IC1631	C0DBAYY01645	IC	1	E.S.D.
		IC1641	C0DBAYY01645	IC	1	E.S.D.
		IC1651	C0DBAYY01645	IC	1	E.S.D.
		IC1661	C0DBAYY01645	IC	1	E.S.D.
		IC1711	C0DBCYY00142	IC	1	E.S.D.
		IC1774	C0DBGYY06023	IC	1	E.S.D.
		IC1811	VUEALLPT083	IC	1	E.S.D.
		IC2301	C0DBGYY00014	IC	1	E.S.D.
		IC2302	C0EBK0000066	IC	1	E.S.D.
		IC2303	C1ZBZ0004142	IC	1	E.S.D.
		IC3101	C1ZBZ0005522	IC	1	E.S.D.
		IC3104	C0JBAA000608	IC	1	E.S.D.
		IC3111	C0JBAB001127	IC	1	E.S.D.
		IC3113	C0JBAA000608	IC	1	E.S.D.
		IC3114	C0JBAA000608	IC	1	E.S.D.
		IC3115	C1CB00004324	IC	1	E.S.D.
		IC3116	C0JBAA000608	IC	1	E.S.D.
		IC3117	C0JBAA000608	IC	1	E.S.D.
		IC3124	C0JBAA000608	IC	1	E.S.D.
		IC3301	C0DBGYY00779	IC	1	E.S.D.
		IC3302	C0DBGYY00779	IC	1	E.S.D.
		IC3351	C0JBAS000401	IC	1	E.S.D.
		IC3352	C0JBAS000419	IC	1	E.S.D.
		IC3401	VSG1032	IC	1	E.S.D.
		IC3403	C0JBAA000608	IC	1	E.S.D.
		IC3404	DV91000003A	IC	1	E.S.D.
		IC3405	C0ZBZ0001730	IC	1	E.S.D.
		IC3406	C0EBY0002365	IC	1	E.S.D.
		IC3407	C1AB00002395	IC	1	E.S.D.
		IC3408	C0JBAA000608	IC	1	E.S.D.
		IC3501	VSG1032	IC	1	E.S.D.
		IC3503	C1ZBZ0005018	IC	1	E.S.D.
		IC3504	C0JBAA000608	IC	1	E.S.D.
		IC3505	C0JBAA000608	IC	1	E.S.D.
		IC3701	C1AB00004179	IC	1	E.S.D.
		IC3702	C0ABZA000062	IC	1	E.S.D.
		IC3801	MN8647781	IC	1	E.S.D.
		IC4301	C0ABBA000201	IC	1	E.S.D.
		IC4302	C0ABBA000201	IC	1	E.S.D.
		IC4303	C0DBGYY02835	IC	1	E.S.D.

		IC4501	C0ABBA000201	IC	1	E.S.D.

Model No. : HC-X1E/EE/PP/GC/GD Parts List

Change	Safety	Ref. No.	Part No.	Part Name & Description	Q'ty	Remarks
		IC4502	C0ABBA000201	IC	1	E.S.D.
		IC4503	C0ABBA000201	IC	1	E.S.D.
		IC4504	C0JBAR000677	IC	1	E.S.D.
		IC4505	C0JBAR000677	IC	1	E.S.D.
		IC4506	C0JBAR000677	IC	1	E.S.D.
		IC4507	C0JBAR000677	IC	1	E.S.D.
		IC4508	C0JBAR000677	IC	1	E.S.D.
		IC4509	C0JBAR000677	IC	1	E.S.D.
		IC4510	C0DBGYY02835	IC	1	E.S.D.
		IC4511	C1AB00004309	IC	1	E.S.D.
		IC4601	C1AB00004182	IC	1	E.S.D.
		IC4801	C0ABBB000220	IC	1	E.S.D.
		IC4802	C0ABBB000220	IC	1	E.S.D.
		IC4803	C0ABBB000220	IC	1	E.S.D.
		IC4804	C0ABBB000220	IC	1	E.S.D.
		IC6301	EWTS9PDL1A	IC	1	E.S.D.
		IC6302	VUEALLPT053	IC	1	E.S.D.
		IC6710	B4ABC0000036	IC	1	E.S.D.
		IC6711	B4ZZ00000031	IC	1	E.S.D.
		IC6951	C0JBAQ000260	IC	1	E.S.D.
		IC6952	C0JBAQ000260	IC	1	E.S.D.
		IC6953	C0JBAQ000260	IC	1	E.S.D.
	⚠	IP1501	K5H802YA0089	IC PROTECTOR	1	
	⚠	IP6851	ERBRD5R00X	IC PROTECTOR	1	
		JK4002	K2HD1YYB0007	JACK	1	
		JK4003	K2HC106B0010	JACK	1	
		JK6001	K1FY119E0025	JACK	1	
		JK6002	K1FY109B0027	JACK	1	
		JK6003	K1FY110E0006	JACK	1	
		JK6301	K4ZZ04000049	JACK	1	
		JK6826	K2HA306A0042	JACK	1	
		JK6851	K2ED2B000009	JACK	1	
		JK6861	K2HC103B0224	JACK	1	
		L301	G1C4R7MA0072	CHIP INDUCTOR	1	
		L401	G1C100MA0495	CHIP INDUCTOR	1	
		L701	G1C100MA0495	CHIP INDUCTOR	1	
		L702	G1C100MA0495	CHIP INDUCTOR	1	
		L703	G1C100MA0495	CHIP INDUCTOR	1	
		L1211	G1C150MA0569	CHIP INDUCTOR	1	
		L1221	G1C100MA0653	CHIP INDUCTOR	1	
		L1231	G1C100MA0653	CHIP INDUCTOR	1	
		L1241	G1C150MA0653	CHIP INDUCTOR	1	
		L1261	G1C100MA0943	CHIP INDUCTOR	1	
		L1271	G1C100MA0569	CHIP INDUCTOR	1	
		L1371	G1C100K00019	CHIP INDUCTOR	1	
		L1611	G1C3R3ZA0476	CHIP INDUCTOR	1	
		L1621	G1C100MA0943	CHIP INDUCTOR	1	
		L1631	G1C3R3ZA0476	CHIP INDUCTOR	1	
		L1641	G1C3R3MA0909	CHIP INDUCTOR	1	
		L1651	G1C3R3MA0909	CHIP INDUCTOR	1	
		L1661	G1C3R3MA0909	CHIP INDUCTOR	1	
		L1711	G1C100MA0943	CHIP INDUCTOR	1	
		L1811	G1C100MA0943	CHIP INDUCTOR	1	
		L3401	G1C4R7MA0495	CHIP INDUCTOR	1	
		L3402	G1C4R7MA0495	CHIP INDUCTOR	1	
		L3403	G1C4R7MA0495	CHIP INDUCTOR	1	
		L3404	J0JGC0000059	FILTER	1	
		L3405	G1C100MA0495	CHIP INDUCTOR	1	
		L3406	G1C4R7MA0495	CHIP INDUCTOR	1	
		L3407	G1C4R7MA0408	CHIP INDUCTOR	1	
		L3408	G1C4R7MA0408	CHIP INDUCTOR	1	

		L3410	G1C4R7MA0495	CHIP INDUCTOR	1	

Model No. : HC-X1E/EE/PP/GC/GD Parts List

Change	Safety	Ref. No.	Part No.	Part Name & Description	Q'ty	Remarks
		L3411	G1C4R7MA0408	CHIP INDUCTOR	1	
		L3412	G1C4R7MA0495	CHIP INDUCTOR	1	
		L3501	G1C4R7MA0495	CHIP INDUCTOR	1	
		L3502	G1C4R7MA0495	CHIP INDUCTOR	1	
		L3503	G1C4R7MA0495	CHIP INDUCTOR	1	
		L3504	J0JGC0000059	FILTER	1	
		L3505	G1C4R7MA0408	CHIP INDUCTOR	1	
		L3506	G1C4R7MA0495	CHIP INDUCTOR	1	
		L3702	G1C4R7MA0073	CHIP INDUCTOR	1	
		L4601	G1C100KA0115	CHIP INDUCTOR	1	
		LB901	J0JBC0000099	FILTER	1	
		LB902	J0JBC0000099	FILTER	1	
		LB903	J0JEC0000008	FILTER	1	
		LB904	J0JEC0000008	FILTER	1	
		LB3701	J0JGC0000059	FILTER	1	
		LB3702	J0JGC0000059	FILTER	1	
		LB3801	J0JCC0000276	FILTER	1	
		LB6001	J0JCC0000276	FILTER	1	
		LB6301	J0JYC0000780	FILTER	1	
		LB6302	J0JYC0000780	FILTER	1	
		LB6303	J0JYC0000780	FILTER	1	
		LB6304	J0JYC0000780	FILTER	1	
		LB6706	J0JCC0000276	FILTER	1	
		LB6826	J0JCC0000276	FILTER	1	
		LB6827	J0JCC0000276	FILTER	1	
		LB6828	J0JCC0000276	FILTER	1	
		LB6861	J0JCC0000276	FILTER	1	
		LB6862	J0JCC0000276	FILTER	1	
		LB6863	J0JCC0000276	FILTER	1	
		P6022	K1KA06BA0050	CONNECTOR 6P	1	
		P6024	K1KA03BA0047	CONNECTOR 3P	1	
		P6301	K1KA04BA0050	CONNECTOR 4P	1	
		P6710	K1KA02BA0047	CONNECTOR 2P	1	
		P6851	K1KA02AA0142	CONNECTOR 2P	1	
		PP6001	K1KB40AA0094	CONNECTOR 40P	1	
		PS6003	K1KY10AA0805	CONNECTOR 10P	1	
		PS6004	K1KY30A00042	CONNECTOR 30P	1	
		PS6719	K1KY10AA0805	CONNECTOR 10P	1	
		Q701	B1CHRD000092	TRANSISTOR	1	E.S.D.
		Q702	B1ABCF000302	TRANSISTOR	1	E.S.D.
		Q704	B1ABCF000302	TRANSISTOR	1	E.S.D.
		Q705	B1ABCF000302	TRANSISTOR	1	E.S.D.
		Q1171	B1CHRD000092	TRANSISTOR	1	E.S.D.
		Q1271	B1DFBL000007	TRANSISTOR	1	E.S.D.
		Q1311	B1ADGE000014	TRANSISTOR	1	E.S.D.
		Q1312	B1HBDFA00005	TRANSISTOR	1	E.S.D.
		Q1321	B1HBDFA00005	TRANSISTOR	1	E.S.D.
		Q1451	MTM761230LBF	TRANSISTOR	1	E.S.D.
		Q1501	B1CHRD000092	TRANSISTOR	1	E.S.D.
		Q1502	B1CHQD000012	TRANSISTOR	1	E.S.D.
		Q1503	B1CHRD000092	TRANSISTOR	1	E.S.D.
		Q1504	B1ABCF000302	TRANSISTOR	1	E.S.D.
		Q1505	B1ABCF000302	TRANSISTOR	1	E.S.D.
		Q1506	B1ABCF000302	TRANSISTOR	1	E.S.D.
		Q1507	B1CFJD000007	TRANSISTOR	1	E.S.D.
		Q1601	B1CHRD000092	TRANSISTOR	1	E.S.D.
		Q3301	B1CHMB000007	TRANSISTOR	1	E.S.D.
		Q3302	B1CHMB000007	TRANSISTOR	1	E.S.D.
		Q3303	B1ADGE000014	TRANSISTOR	1	E.S.D.
		Q3304	B1ADGE000014	TRANSISTOR	1	E.S.D.
		Q4302	B1CZHC000001	TRANSISTOR	1	E.S.D.

		Q4303	B1CZHC000001	TRANSISTOR	1	E.S.D.

Model No. : HC-X1E/EE/PP/GC/GD Parts List

Change	Safety	Ref. No.	Part No.	Part Name & Description	Q'ty	Remarks
		Q4304	B1CZHC000001	TRANSISTOR	1	E.S.D.
		Q4501	B1CFGD000003	TRANSISTOR	1	E.S.D.
		Q4801	B1ABCF000271	TRANSISTOR	1	E.S.D.
		Q6826	B1HFCFA00050	TRANSISTOR	1	E.S.D.
		Q6827	B1HFCFA00050	TRANSISTOR	1	E.S.D.
		Q6828	B1HFCFA00050	TRANSISTOR	1	E.S.D.
		Q6829	B1HFCFA00050	TRANSISTOR	1	E.S.D.
		Q6830	B1HFCFA00050	TRANSISTOR	1	E.S.D.
		Q6831	B1HFCFA00050	TRANSISTOR	1	E.S.D.
		QR401	B1GBCFYY0221	TRANSISTOR-RESISTOR	1	E.S.D.
		QR701	B1GBCFYY0221	TRANSISTOR-RESISTOR	1	E.S.D.
		QR1171	B1GDCFYY0151	TRANSISTOR-RESISTOR	1	E.S.D.
		QR1172	B1GBCFYY0222	TRANSISTOR-RESISTOR	1	E.S.D.
		QR1311	B1GBCFYY0222	TRANSISTOR-RESISTOR	1	E.S.D.
		QR1312	B1GBCFYY0222	TRANSISTOR-RESISTOR	1	E.S.D.
		QR1451	B1GBCFYY0222	TRANSISTOR-RESISTOR	1	E.S.D.
		QR1501	B1GBCFYY0222	TRANSISTOR-RESISTOR	1	E.S.D.
		QR1502	B1GDCFYY0148	TRANSISTOR-RESISTOR	1	E.S.D.
		QR1504	B1GBCFYY0222	TRANSISTOR-RESISTOR	1	E.S.D.
		QR1508	B1GDCFYY0148	TRANSISTOR-RESISTOR	1	E.S.D.
		QR1553	B1GBCFYY0222	TRANSISTOR-RESISTOR	1	E.S.D.
		QR1601	B1GBCFYY0222	TRANSISTOR-RESISTOR	1	E.S.D.
		QR2301	B1GDCFYY0148	TRANSISTOR-RESISTOR	1	E.S.D.
		QR2302	B1GBCFYY0222	TRANSISTOR-RESISTOR	1	E.S.D.
		QR3303	B1GBCFYY0225	TRANSISTOR-RESISTOR	1	E.S.D.
		QR3304	B1GBCFYY0225	TRANSISTOR-RESISTOR	1	E.S.D.
		QR3401	B1GDCFYY0151	TRANSISTOR-RESISTOR	1	E.S.D.
		QR3402	B1GDCFYY0151	TRANSISTOR-RESISTOR	1	E.S.D.
		QR3405	B1GDCFYY0151	TRANSISTOR-RESISTOR	1	E.S.D.
		QR3501	B1GDCFYY0189	TRANSISTOR-RESISTOR	1	E.S.D.
		QR3502	B1GBCFYY0234	TRANSISTOR-RESISTOR	1	E.S.D.
		QR3503	B1GDCFYY0189	TRANSISTOR-RESISTOR	1	E.S.D.
		QR3504	B1GBCFYY0234	TRANSISTOR-RESISTOR	1	E.S.D.
		QR3509	B1GDCFYY0151	TRANSISTOR-RESISTOR	1	E.S.D.
		QR3512	B1GDCFYY0151	TRANSISTOR-RESISTOR	1	E.S.D.
		QR3701	B1GDCFYY0151	TRANSISTOR-RESISTOR	1	E.S.D.
		QR4301	B1GDCFYY0087	TRANSISTOR-RESISTOR	1	E.S.D.
		QR4302	B1GDCFYY0087	TRANSISTOR-RESISTOR	1	E.S.D.
		QR4303	B1GDCFYY0087	TRANSISTOR-RESISTOR	1	E.S.D.
		QR4304	B1GBCFYY0135	TRANSISTOR-RESISTOR	1	E.S.D.
		QR4305	B1GBCFYY0135	TRANSISTOR-RESISTOR	1	E.S.D.
		QR4306	B1GBCFYY0135	TRANSISTOR-RESISTOR	1	E.S.D.
		QR4307	B1GBCFYY0135	TRANSISTOR-RESISTOR	1	E.S.D.
		QR4308	B1GBCFYY0135	TRANSISTOR-RESISTOR	1	E.S.D.
		QR4501	B1GBCFYY0219	TRANSISTOR-RESISTOR	1	E.S.D.
		QR4502	B1GBCFYY0219	TRANSISTOR-RESISTOR	1	E.S.D.
		QR4503	B1GBCFYY0219	TRANSISTOR-RESISTOR	1	E.S.D.
		QR4504	B1GBCFYY0219	TRANSISTOR-RESISTOR	1	E.S.D.
		QR4505	B1GBCFYY0219	TRANSISTOR-RESISTOR	1	E.S.D.
		QR4506	B1GBCFYY0219	TRANSISTOR-RESISTOR	1	E.S.D.
		R301	D0GA103JA039	RESISTOR	1	
		R302	D0GA102JA039	RESISTOR	1	
		R310	D0GAR00J0005	RESISTOR	1	
		R311	D0GAR00J0005	RESISTOR	1	
		R312	D0GAR00J0005	RESISTOR	1	
		R313	D0GAR00J0005	RESISTOR	1	
		R314	D0GAR00J0005	RESISTOR	1	
		R315	D0GAR00J0005	RESISTOR	1	
		R316	D0GAR00J0005	RESISTOR	1	
		R317	D0GAR00J0005	RESISTOR	1	
		R403	D0GA103JA039	RESISTOR	1	

		R405	D0GAR00J0005	RESISTOR	1	

Model No. : HC-X1E/EE/PP/GC/GD Parts List

Change	Safety	Ref. No.	Part No.	Part Name & Description	Q'ty	Remarks
		R406	D0GA223JA023	RESISTOR	1	
		R407	ERJ2RHD273	RESISTOR	1	
		R408	ERJ2RHD153X	RESISTOR	1	
		R409	D0GA333JA023	RESISTOR	1	
		R413	D0GA103JA039	RESISTOR	1	
		R431	D0GA473JA039	RESISTOR	1	
		R432	D0GA473JA039	RESISTOR	1	
		R508	D0GA100JA023	RESISTOR	1	
		R509	D0GA100JA023	RESISTOR	1	
		R510	D0GA100JA023	RESISTOR	1	
		R511	D0GA100JA023	RESISTOR	1	
		R700	D0GBR00J0004	RESISTOR	1	
		R703	ERJ2RKD224	RESISTOR	1	
		R704	ERJ2RKD224	RESISTOR	1	
		R705	D0GA473JA039	RESISTOR	1	
		R706	ERJ2RHD103	RESISTOR	1	
		R707	ERJ2RHD103	RESISTOR	1	
		R708	D0GA103JA039	RESISTOR	1	
		R709	ERJ2RHD103	RESISTOR	1	
		R710	ERJ2RHD103	RESISTOR	1	
		R711	ERJ2RKD224	RESISTOR	1	
		R712	ERJ2RKD224	RESISTOR	1	
		R713	D0GA104JA039	RESISTOR	1	
		R714	D0GA104JA039	RESISTOR	1	
		R715	ERJ2RHD102	RESISTOR	1	
		R716	ERJ2RHD102	RESISTOR	1	
		R717	ERJ2RHD823	RESISTOR	1	
		R718	D0GA102JA039	RESISTOR	1	
		R719	ERJ2RHD104	RESISTOR	1	
		R720	ERJ2RKD224	RESISTOR	1	
		R723	D0GA103JA039	RESISTOR	1	
		R724	ERJ2RKD224	RESISTOR	1	
		R725	D0GA682JA023	RESISTOR	1	
		R728	ERJ2RHD103	RESISTOR	1	
		R729	D0GA223JA023	RESISTOR	1	
		R730	ERJ2RHD103	RESISTOR	1	
		R732	D0GA104JA039	RESISTOR	1	
		R733	D0GA222JA023	RESISTOR	1	
		R735	D0GA332JA023	RESISTOR	1	
		R736	D0GA332JA023	RESISTOR	1	
		R738	ERJ2RHD103	RESISTOR	1	
		R739	D0GA561JA023	RESISTOR	1	
		R740	D0GA561JA023	RESISTOR	1	
		R741	ERJ2RHD103	RESISTOR	1	
		R747	D0GA101JA039	RESISTOR	1	
		R751	D0GA562JA023	RESISTOR	1	
		R752	D0GA102JA039	RESISTOR	1	
		R753	D0GA102JA039	RESISTOR	1	
		R754	D0GA332JA023	RESISTOR	1	
		R755	D0GA101JA039	RESISTOR	1	
		R757	D0GA101JA039	RESISTOR	1	
		R758	D0GA221JA023	RESISTOR	1	
		R759	D0GA562JA023	RESISTOR	1	
		R761	D0GA103JA039	RESISTOR	1	
		R762	D0GA221JA023	RESISTOR	1	
		R763	D0GA103JA039	RESISTOR	1	
		R764	D0GAR00J0005	RESISTOR	1	
		R765	D0GBR00J0004	RESISTOR	1	
		R766	D0GAR00J0005	RESISTOR	1	
		R767	ERJ2RKD124	RESISTOR	1	
		R768	ERJ2RHD104	RESISTOR	1	

		R769	D0GA101JA039	RESISTOR	1	

Model No. : HC-X1E/EE/PP/GC/GD Parts List

Change	Safety	Ref. No.	Part No.	Part Name & Description	Q'ty	Remarks
		R770	ERJ2RHD103	RESISTOR	1	
		R771	ERJ2RHD104	RESISTOR	1	
		R772	D0GA821JA023	RESISTOR	1	
		R773	D0GA362JA023	RESISTOR	1	
		R774	ERJ2RHD103	RESISTOR	1	
		R776	ERJ2RHD104	RESISTOR	1	
		R777	ERJ2RHD681	RESISTOR	1	
		R778	D0GA223JA023	RESISTOR	1	
		R781	D0GA823JA023	RESISTOR	1	
		R782	D0GA103JA039	RESISTOR	1	
		R783	D0GA102JA039	RESISTOR	1	
		R785	D0GA102JA039	RESISTOR	1	
		R786	D0GA102JA039	RESISTOR	1	
		R787	ERAS39J5R6V	RESISTOR	1	
		R788	D0GA102JA039	RESISTOR	1	
		R789	ERAS39J5R6V	RESISTOR	1	
		R790	D0GA473JA039	RESISTOR	1	
		R791	D0GA473JA039	RESISTOR	1	
		R792	D0GA391JA023	RESISTOR	1	
		R793	D0GA391JA023	RESISTOR	1	
		R794	D0GA221JA023	RESISTOR	1	
		R797	D0GA103JA039	RESISTOR	1	
		R798	D0GAR00J0005	RESISTOR	1	
		R910	ERJ2RHD471	RESISTOR	1	
		R911	ERJ2RHD102	RESISTOR	1	
		R914	D0GA820JA023	RESISTOR	1	
		R915	ERJ2RHD471	RESISTOR	1	
		R917	D0GA820JA023	RESISTOR	1	
		R920	D0GAR00J0005	RESISTOR	1	
		R921	D0GAR00J0005	RESISTOR	1	
		R1001	D0GD562JA052	RESISTOR	1	
	⚠	R1171	D1JBR179A023	FUSING RESISTOR	1	
		R1172	D0GA103JA039	RESISTOR	1	
		R1173	D0GA103JA039	RESISTOR	1	
		R1174	D0GA103JA039	RESISTOR	1	
		R1175	D0GA223JA023	RESISTOR	1	
		R1211	ERJ2RHD104	RESISTOR	1	
		R1212	ERJ2RHD183	RESISTOR	1	
		R1213	ERJ2RHD223	RESISTOR	1	
		R1214	D0GA102JA039	RESISTOR	1	
		R1215	D0GA104JA039	RESISTOR	1	
		R1221	ERJ2RHD623	RESISTOR	1	
		R1222	ERJ2RHD562	RESISTOR	1	
		R1223	ERJ2RHD223	RESISTOR	1	
		R1224	D0GA472JA023	RESISTOR	1	
		R1225	D0GA104JA039	RESISTOR	1	
		R1231	ERJ2RHD273	RESISTOR	1	
		R1232	ERJ2RHD102	RESISTOR	1	
		R1233	ERJ2RHD223	RESISTOR	1	
		R1234	D0GA222JA023	RESISTOR	1	
		R1235	D0GA104JA039	RESISTOR	1	
		R1241	ERJ2RHD823	RESISTOR	1	
		R1242	ERJ2RHD473	RESISTOR	1	
		R1243	ERJ2RHD223	RESISTOR	1	
		R1244	D0GA562JA023	RESISTOR	1	
		R1261	ERJ2RHD683	RESISTOR	1	
		R1262	ERJ2RHD822	RESISTOR	1	
		R1263	ERJ2RHD223	RESISTOR	1	
		R1264	D0GA222JA023	RESISTOR	1	
		R1271	ERJ2RKD274	RESISTOR	1	
		R1272	ERJ2RKD204	RESISTOR	1	

		R1273	ERJ2RHD103	RESISTOR	1	

Model No. : HC-X1E/EE/PP/GC/GD Parts List

Change	Safety	Ref. No.	Part No.	Part Name & Description	Q'ty	Remarks
		R1274	D0GA204JA023	RESISTOR	1	
		R1275	D0GA474JA023	RESISTOR	1	
		R1276	ERJ2RKD274	RESISTOR	1	
		R1277	D0GA104JA039	RESISTOR	1	
		R1311	D0GA472JA023	RESISTOR	1	
		R1312	ERJ2RHD222	RESISTOR	1	
		R1313	ERJ2RHD122	RESISTOR	1	
		R1314	ERJ2RHD182	RESISTOR	1	
		R1315	D0GA472JA023	RESISTOR	1	
		R1316	D0GA102JA039	RESISTOR	1	
		R1317	D0GA102JA039	RESISTOR	1	
		R1318	D0GA472JA023	RESISTOR	1	
		R1321	D0GA332JA023	RESISTOR	1	
		R1322	D0GA273JA023	RESISTOR	1	
		R1323	D0GA103JA039	RESISTOR	1	
		R1324	D0GA680JA023	RESISTOR	1	
		R1325	D0GA392JA023	RESISTOR	1	
		R1326	D0GA224JA023	RESISTOR	1	
		R1331	D0GA471JA023	RESISTOR	1	
		R1341	D0GA472JA023	RESISTOR	1	
		R1361	D0GA332JA023	RESISTOR	1	
		R1371	D0GB104JA065	RESISTOR	1	
		R1451	D0GA123JA023	RESISTOR	1	
		R1452	D0GA102JA039	RESISTOR	1	
		R1453	D0GA104JA039	RESISTOR	1	
		R1454	D0GA473JA039	RESISTOR	1	
		R1465	D0GA103JA039	RESISTOR	1	
		R1501	D0GA104JA039	RESISTOR	1	
		R1502	D0GA104JA039	RESISTOR	1	
		R1503	D0GA104JA039	RESISTOR	1	
		R1504	D0GA104JA039	RESISTOR	1	
		R1505	ERJ2RHD473	RESISTOR	1	
		R1506	ERJ2RKD224	RESISTOR	1	
		R1507	D0GA153JA023	RESISTOR	1	
		R1509	D0GA104JA039	RESISTOR	1	
		R1510	D0GA103JA039	RESISTOR	1	
		R1511	ERJ2RKD224	RESISTOR	1	
		R1512	ERJ2RKD224	RESISTOR	1	
		R1514	D0GA104JA039	RESISTOR	1	
		R1515	D0GA224JA023	RESISTOR	1	
		R1516	D0GA224JA023	RESISTOR	1	
		R1517	D0GA104JA039	RESISTOR	1	
		R1518	ERJ2RHD123	RESISTOR	1	
		R1519	ERJ2RHD153X	RESISTOR	1	
		R1560	D0GA473JA039	RESISTOR	1	
		R1602	D0GA104JA039	RESISTOR	1	
		R1603	D0GA104JA039	RESISTOR	1	
		R1611	ERJ2RHD123	RESISTOR	1	
		R1612	ERJ2RHD102	RESISTOR	1	
		R1613	ERJ2RHD223	RESISTOR	1	
		R1615	D0GA102JA039	RESISTOR	1	
		R1621	ERJ2RHD333X	RESISTOR	1	
		R1622	ERJ2RHD103	RESISTOR	1	
		R1623	ERJ2RHD223	RESISTOR	1	
		R1624	D0GA101JA039	RESISTOR	1	
		R1625	D0GA222JA023	RESISTOR	1	
		R1627	D0GA104JA039	RESISTOR	1	
		R1631	ERJ2RHD103	RESISTOR	1	
		R1632	ERJ2RHD332X	RESISTOR	1	
		R1633	ERJ2RHD223	RESISTOR	1	
		R1635	D0GA122JA023	RESISTOR	1	

		R1641	ERJ2RHD682X	RESISTOR	1	

Model No. : HC-X1E/EE/PP/GC/GD Parts List

Change	Safety	Ref. No.	Part No.	Part Name & Description	Q'ty	Remarks
		R1642	D0GA561JA023	RESISTOR	1	
		R1643	ERJ2RHD223	RESISTOR	1	
		R1645	D0GA102JA039	RESISTOR	1	
		R1651	ERJ2RHD682X	RESISTOR	1	
		R1652	D0GA561JA023	RESISTOR	1	
		R1653	ERJ2RHD223	RESISTOR	1	
		R1655	D0GA102JA039	RESISTOR	1	
		R1661	ERJ2RHD682X	RESISTOR	1	
		R1662	D0GA181JA023	RESISTOR	1	
		R1663	ERJ2RHD223	RESISTOR	1	
		R1665	D0GA102JA039	RESISTOR	1	
	⚠	R1701	D1JBR179A023	FUSING RESISTOR	1	
		R1711	ERJ2RHD683	RESISTOR	1	
		R1712	ERJ2RHD103	RESISTOR	1	
		R1713	ERJ2RHD103	RESISTOR	1	
		R1714	D0GA472JA023	RESISTOR	1	
		R1715	D0GA103JA039	RESISTOR	1	
		R1775	D0GA103JA039	RESISTOR	1	
	⚠	R1801	D1JBR179A023	FUSING RESISTOR	1	
		R1813	ERJ2RHD203	RESISTOR	1	
		R1814	D0GF330JA048	RESISTOR	1	
	⚠	R1815	D1JB2R70A023	FUSING RESISTOR	1	
		R2301	D0GA102JA039	RESISTOR	1	
		R2303	D0GA102JA039	RESISTOR	1	
		R2304	D0GA104JA039	RESISTOR	1	
		R2307	D0GA333JA023	RESISTOR	1	
	⚠	R2308	D1JB2R70A023	FUSING RESISTOR	1	
		R3103	D0GA471JA023	RESISTOR	1	
		R3105	D0GA471JA023	RESISTOR	1	
		R3109	D0GA471JA023	RESISTOR	1	
		R3110	D0GA103JA039	RESISTOR	1	
		R3111	D0GA103JA039	RESISTOR	1	
		R3112	D0GA103JA039	RESISTOR	1	
		R3113	D0GA103JA039	RESISTOR	1	
		R3114	D0GA471JA023	RESISTOR	1	
		R3115	D0GA471JA023	RESISTOR	1	
		R3116	D0GA471JA023	RESISTOR	1	
		R3119	D0GA102JA039	RESISTOR	1	
		R3120	D0GA473JA039	RESISTOR	1	
		R3121	D0GA103JA039	RESISTOR	1	
		R3122	D0GA102JA039	RESISTOR	1	
		R3123	D0GAR00J0005	RESISTOR	1	
		R3127	D0GAR00J0005	RESISTOR	1	
		R3128	D0GAR00J0005	RESISTOR	1	
		R3131	D0GAR00J0005	RESISTOR	1	
		R3136	D0GA105JA023	RESISTOR	1	
		R3154	ERJ2RHD104	RESISTOR	1	
		R3155	ERJ2RHD104	RESISTOR	1	
		R3158	D0GA223JA023	RESISTOR	1	
		R3159	D0GA223JA023	RESISTOR	1	
		R3161	ERJ2RHD101	RESISTOR	1	
		R3162	ERJ2RHD101	RESISTOR	1	
		R3163	ERJ2RHD101	RESISTOR	1	
		R3164	ERJ2RHD101	RESISTOR	1	
		R3170	D0GA220JA023	RESISTOR	1	
		R3171	D0GA220JA023	RESISTOR	1	
		R3173	ERJ2RHD101	RESISTOR	1	
		R3182	D0GA471JA023	RESISTOR	1	
		R3183	D0GA471JA023	RESISTOR	1	
		R3184	D0GA471JA023	RESISTOR	1	
		R3185	D0GA471JA023	RESISTOR	1	

		R3186	D0GA471JA023	RESISTOR	1	

Model No. : HC-X1E/EE/PP/GC/GD Parts List

Change	Safety	Ref. No.	Part No.	Part Name & Description	Q'ty	Remarks
		R3187	D0GA471JA023	RESISTOR	1	
		R3188	D0GA471JA023	RESISTOR	1	
		R3189	D0GA471JA023	RESISTOR	1	
		R3198	D0GA123JA023	RESISTOR	1	
		R3244	D0GA331JA023	RESISTOR	1	
		R3245	D0GA472JA023	RESISTOR	1	
		R3246	D0GA472JA023	RESISTOR	1	
		R3252	D0GA330JA023	RESISTOR	1	
		R3253	D0GA102JA039	RESISTOR	1	
		R3266	D0GA103JA039	RESISTOR	1	
		R3267	D0GAR00J0005	RESISTOR	1	
		R3301	D0GA222JA023	RESISTOR	1	
		R3302	D0GA222JA023	RESISTOR	1	
		R3303	D0GA104JA039	RESISTOR	1	
		R3304	D0GA103JA039	RESISTOR	1	
		R3305	D0GA104JA039	RESISTOR	1	
		R3306	D0GA103JA039	RESISTOR	1	
		R3307	D0GA331JA023	RESISTOR	1	
		R3308	D0GA331JA023	RESISTOR	1	
		R3309	D0GA473JA039	RESISTOR	1	
		R3310	D0GA222JA023	RESISTOR	1	
		R3311	D0GA473JA039	RESISTOR	1	
		R3312	D0GA222JA023	RESISTOR	1	
		R3313	D0GA103JA039	RESISTOR	1	
		R3314	D0GA103JA039	RESISTOR	1	
		R3401	ERJ2RHD182	RESISTOR	1	
		R3402	D0GA101JA039	RESISTOR	1	
		R3406	D0GA220JA023	RESISTOR	1	
		R3410	D0GA152JA023	RESISTOR	1	
		R3411	ERJ2RHD103	RESISTOR	1	
		R3412	D0GA101JA039	RESISTOR	1	
		R3413	ERJ2RHD182	RESISTOR	1	
		R3414	ERJ2RHD182	RESISTOR	1	
		R3415	D0GA101JA039	RESISTOR	1	
		R3416	D0GAR00J0005	RESISTOR	1	
		R3417	D0GA101JA039	RESISTOR	1	
		R3419	D0GA272JA023	RESISTOR	1	
		R3420	ERJ2RHD682X	RESISTOR	1	
		R3421	D0GA272JA023	RESISTOR	1	
		R3422	D0GA472JA023	RESISTOR	1	
		R3423	D0GA272JA023	RESISTOR	1	
		R3424	D0GA471JA023	RESISTOR	1	
		R3425	D0GA472JA023	RESISTOR	1	
		R3427	ERJ2RHD241	RESISTOR	1	
		R3429	D0GA273JA023	RESISTOR	1	
		R3430	D0GA102JA039	RESISTOR	1	
		R3431	ERJ2RHD241	RESISTOR	1	
		R3432	ERJ2RHD472	RESISTOR	1	
		R3433	D0GA102JA039	RESISTOR	1	
		R3434	D0GA102JA039	RESISTOR	1	
		R3437	D0GA330JA023	RESISTOR	1	
		R3438	ERJ2RHD201	RESISTOR	1	
		R3439	ERJ2RHD241	RESISTOR	1	
		R3440	D0GA330JA023	RESISTOR	1	
		R3441	D0GA272JA023	RESISTOR	1	
		R3442	D0GA220JA023	RESISTOR	1	
		R3443	D0GA220JA023	RESISTOR	1	
		R3444	ERJ2RHD241	RESISTOR	1	
		R3445	D0GA330JA023	RESISTOR	1	
		R3446	D0GA220JA023	RESISTOR	1	
		R3450	ERJ2RHD182	RESISTOR	1	

		R3451	ERJ2RHD182	RESISTOR	1	

Model No. : HC-X1E/EE/PP/GC/GD Parts List

Change	Safety	Ref. No.	Part No.	Part Name & Description	Q'ty	Remarks
		R3452	D0GA220JA023	RESISTOR	1	
		R3453	ERJ2RHD182	RESISTOR	1	
		R3454	ERJ2RHD182	RESISTOR	1	
		R3455	D0GA220JA023	RESISTOR	1	
		R3456	D0GA220JA023	RESISTOR	1	
		R3457	D0GA220JA023	RESISTOR	1	
		R3458	D0GA102JA039	RESISTOR	1	
		R3459	D0GA220JA023	RESISTOR	1	
		R3462	D0GA220JA023	RESISTOR	1	
		R3464	D0GA102JA039	RESISTOR	1	
		R3465	ERJ2RHD182	RESISTOR	1	
		R3466	D0GA220JA023	RESISTOR	1	
		R3468	D0GA471JA023	RESISTOR	1	
		R3476	ERJ2RHD201	RESISTOR	1	
		R3477	D0GA152JA023	RESISTOR	1	
		R3478	D0GA102JA039	RESISTOR	1	
		R3479	D0GA471JA023	RESISTOR	1	
		R3488	ERJ2RHD123	RESISTOR	1	
		R3489	ERJ2RHD123	RESISTOR	1	
		R3490	ERJ2RHD123	RESISTOR	1	
		R3491	ERJ2RHD203	RESISTOR	1	
		R3492	ERJ2RHD203	RESISTOR	1	
		R3494	ERJ2RHD203	RESISTOR	1	
		R3495	D0GAR00J0005	RESISTOR	1	
		R3497	D0GAR00J0005	RESISTOR	1	
		R3508	D0GA104JA039	RESISTOR	1	
		R3511	D0GA472JA023	RESISTOR	1	
		R3512	D0GA102JA039	RESISTOR	1	
		R3513	D0GA472JA023	RESISTOR	1	
		R3515	D0GA104JA039	RESISTOR	1	
		R3517	D0GA472JA023	RESISTOR	1	
		R3518	D0GA102JA039	RESISTOR	1	
		R3523	ERJ2RHD472	RESISTOR	1	
		R3525	D0GA273JA023	RESISTOR	1	
		R3526	D0GA472JA023	RESISTOR	1	
		R3527	D0GA472JA023	RESISTOR	1	
		R3528	D0GA472JA023	RESISTOR	1	
		R3529	D0GA472JA023	RESISTOR	1	
		R3530	D0GA331JA023	RESISTOR	1	
		R3532	ERJ2RHD182	RESISTOR	1	
		R3533	ERJ2RHD182	RESISTOR	1	
		R3534	ERJ2RHD182	RESISTOR	1	
		R3535	ERJ2RHD182	RESISTOR	1	
		R3538	ERJ2RHD182	RESISTOR	1	
		R3539	ERJ2RHD182	RESISTOR	1	
		R3540	ERJ2RHD182	RESISTOR	1	
		R3541	ERJ2RHD182	RESISTOR	1	
		R3542	ERJ2RHD241	RESISTOR	1	
		R3543	ERJ2RHD241	RESISTOR	1	
		R3544	ERJ2RHD241	RESISTOR	1	
		R3545	ERJ2RHD241	RESISTOR	1	
		R3548	D0GA471JA023	RESISTOR	1	
		R3549	D0GA471JA023	RESISTOR	1	
		R3554	D0GA102JA039	RESISTOR	1	
		R3701	D0GA102JA039	RESISTOR	1	
		R3702	D0GA101JA039	RESISTOR	1	
		R3703	D0GA101JA039	RESISTOR	1	
		R3704	D0GA681JA023	RESISTOR	1	
		R3705	D0GA681JA023	RESISTOR	1	
		R3706	D0GA223JA023	RESISTOR	1	
		R3707	D0GA223JA023	RESISTOR	1	

		R3720	D0GA470JA023	RESISTOR	1	

Model No. : HC-X1E/EE/PP/GC/GD Parts List

Change	Safety	Ref. No.	Part No.	Part Name & Description	Q'ty	Remarks
		R3721	D0GA470JA023	RESISTOR	1	
		R3740	D0GA683JA023	RESISTOR	1	
		R3741	D0GA683JA023	RESISTOR	1	
		R3742	D0GA103JA039	RESISTOR	1	
		R3808	D0GA202JA023	RESISTOR	1	
		R3809	D0GA103JA039	RESISTOR	1	
		R3810	D0GA103JA039	RESISTOR	1	
		R3811	D0GA202JA023	RESISTOR	1	
		R3813	D0GA102JA039	RESISTOR	1	
		R3816	D0GA103JA039	RESISTOR	1	
		R3817	D0GA103JA039	RESISTOR	1	
		R3821	D0GA103JA039	RESISTOR	1	
		R3822	D0GA103JA039	RESISTOR	1	
		R3824	ERJ2RHD511	RESISTOR	1	
		R3828	D0GA273JA023	RESISTOR	1	
		R3830	D0GA682JA023	RESISTOR	1	
		R3832	D0GA100JA023	RESISTOR	1	
		R3833	D0GA100JA023	RESISTOR	1	
		R4011	D0GA331JA023	RESISTOR	1	
		R4012	D0GA331JA023	RESISTOR	1	
		R4013	D0GA331JA023	RESISTOR	1	
		R4014	D0GA331JA023	RESISTOR	1	
		R4015	D0GA331JA023	RESISTOR	1	
		R4016	D0GA331JA023	RESISTOR	1	
		R4301	D0GA333JA023	RESISTOR	1	
		R4302	D0GA333JA023	RESISTOR	1	
		R4303	D0GD104JA052	RESISTOR	1	
		R4304	D0GD104JA052	RESISTOR	1	
		R4305	D0GD103JA052	RESISTOR	1	
		R4306	D0GD103JA052	RESISTOR	1	
		R4309	D0GA104JA039	RESISTOR	1	
		R4310	D0GA473JA039	RESISTOR	1	
		R4311	D0GA473JA039	RESISTOR	1	
		R4312	D0GA471JA023	RESISTOR	1	
		R4313	D0GA103JA039	RESISTOR	1	
		R4314	D0GA103JA039	RESISTOR	1	
		R4315	D0GA103JA039	RESISTOR	1	
		R4321	D0GA103JA039	RESISTOR	1	
		R4322	D0GA103JA039	RESISTOR	1	
		R4323	D0GA103JA039	RESISTOR	1	
		R4324	D0GA103JA039	RESISTOR	1	
		R4325	D0GA104JA039	RESISTOR	1	
		R4326	D0GA104JA039	RESISTOR	1	
		R4327	D0GA471JA023	RESISTOR	1	
		R4328	D0GA471JA023	RESISTOR	1	
		R4329	D0GA391JA023	RESISTOR	1	
		R4330	D0GA121JA023	RESISTOR	1	
		R4331	D0GA122JA023	RESISTOR	1	
		R4332	D0GA105JA023	RESISTOR	1	
		R4333	D0GA121JA023	RESISTOR	1	
		R4339	D0GA472JA023	RESISTOR	1	
		R4340	D0GA472JA023	RESISTOR	1	
		R4348	D0GA104JA039	RESISTOR	1	
		R4349	D0GA104JA039	RESISTOR	1	
		R4350	D0GA104JA039	RESISTOR	1	
		R4351	D0GA104JA039	RESISTOR	1	
		R4352	D0GA104JA039	RESISTOR	1	
		R4353	D0GA104JA039	RESISTOR	1	
		R4354	D0GA472JA023	RESISTOR	1	
		R4355	D0GA472JA023	RESISTOR	1	
		R4501	D0GA472JA023	RESISTOR	1	

		R4502	D0GA472JA023	RESISTOR	1	

Model No. : HC-X1E/EE/PP/GC/GD Parts List

Change	Safety	Ref. No.	Part No.	Part Name & Description	Q'ty	Remarks
		R4503	D0GA472JA023	RESISTOR	1	
		R4504	D0GA472JA023	RESISTOR	1	
		R4505	D0GA472JA023	RESISTOR	1	
		R4506	D0GA472JA023	RESISTOR	1	
		R4507	D0GA472JA023	RESISTOR	1	
		R4508	D0GA472JA023	RESISTOR	1	
		R4509	D0GA472JA023	RESISTOR	1	
		R4510	D0GA472JA023	RESISTOR	1	
		R4511	D0GA472JA023	RESISTOR	1	
		R4512	D0GA472JA023	RESISTOR	1	
		R4513	D0GA472JA023	RESISTOR	1	
		R4514	D0GA472JA023	RESISTOR	1	
		R4515	D0GA472JA023	RESISTOR	1	
		R4516	D0GA472JA023	RESISTOR	1	
		R4517	D0GA472JA023	RESISTOR	1	
		R4518	D0GA472JA023	RESISTOR	1	
		R4519	D0GA472JA023	RESISTOR	1	
		R4520	D0GA472JA023	RESISTOR	1	
		R4521	D0GA472JA023	RESISTOR	1	
		R4522	D0GA472JA023	RESISTOR	1	
		R4523	D0GA472JA023	RESISTOR	1	
		R4524	D0GA472JA023	RESISTOR	1	
		R4525	D0GA104JA039	RESISTOR	1	
		R4526	D0GA104JA039	RESISTOR	1	
		R4527	D0GA104JA039	RESISTOR	1	
		R4528	D0GA104JA039	RESISTOR	1	
		R4529	D0GA104JA039	RESISTOR	1	
		R4530	D0GA104JA039	RESISTOR	1	
		R4531	D0GA104JA039	RESISTOR	1	
		R4532	D0GA104JA039	RESISTOR	1	
		R4533	D0GA104JA039	RESISTOR	1	
		R4534	D0GA104JA039	RESISTOR	1	
		R4535	D0GA104JA039	RESISTOR	1	
		R4536	D0GA104JA039	RESISTOR	1	
		R4537	D0GA333JA023	RESISTOR	1	
		R4538	D0GA333JA023	RESISTOR	1	
		R4539	D0GA333JA023	RESISTOR	1	
		R4540	D0GA333JA023	RESISTOR	1	
		R4541	D0GA333JA023	RESISTOR	1	
		R4542	D0GA333JA023	RESISTOR	1	
		R4547	D0GA332JA023	RESISTOR	1	
		R4548	D0GA332JA023	RESISTOR	1	
		R4601	D0GA103JA039	RESISTOR	1	
		R4608	D0GA102JA039	RESISTOR	1	
		R4801	D0GA333JA023	RESISTOR	1	
		R4802	D0GA333JA023	RESISTOR	1	
		R4803	D0GA333JA023	RESISTOR	1	
		R4804	D0GA223JA023	RESISTOR	1	
		R4805	D0GA223JA023	RESISTOR	1	
		R4806	D0GA223JA023	RESISTOR	1	
		R4807	D0GA333JA023	RESISTOR	1	
		R4808	D0GA223JA023	RESISTOR	1	
		R4809	D0GA103JA039	RESISTOR	1	
		R4810	D0GA103JA039	RESISTOR	1	
		R4811	D0GA103JA039	RESISTOR	1	
		R4812	D0GA103JA039	RESISTOR	1	
		R4813	D0GA103JA039	RESISTOR	1	
		R4814	D0GA333JA023	RESISTOR	1	
		R4815	D0GA333JA023	RESISTOR	1	
		R4816	D0GA223JA023	RESISTOR	1	
		R4817	D0GA223JA023	RESISTOR	1	

		R4818	D0GA223JA023	RESISTOR	1	

Model No. : HC-X1E/EE/PP/GC/GD Parts List

Change	Safety	Ref. No.	Part No.	Part Name & Description	Q'ty	Remarks
		R4819	D0GA333JA023	RESISTOR	1	
		R4820	D0GA333JA023	RESISTOR	1	
		R4821	D0GA333JA023	RESISTOR	1	
		R4822	D0GA223JA023	RESISTOR	1	
		R4823	D0GA333JA023	RESISTOR	1	
		R4824	D0GA273JA023	RESISTOR	1	
		R4825	D0GA333JA023	RESISTOR	1	
		R4826	D0GA103JA039	RESISTOR	1	
		R4827	D0GA103JA039	RESISTOR	1	
		R4828	D0GA472JA023	RESISTOR	1	
		R4829	D0GA103JA039	RESISTOR	1	
		R4830	D0GA103JA039	RESISTOR	1	
		R4831	D0GA103JA039	RESISTOR	1	
		R6001	D0GD102JA052	RESISTOR	1	
	⚠	R6003	D1JBR032A055	FUSING RESISTOR	1	
		R6005	D0GA153JA023	RESISTOR	1	
		R6006	D0GA101JA039	RESISTOR	1	
		R6007	D0GA101JA039	RESISTOR	1	
		R6008	D0GA101JA039	RESISTOR	1	
		R6023	D0GA151JA023	RESISTOR	1	
		R6024	D0GA151JA023	RESISTOR	1	
		R6025	D0GA151JA023	RESISTOR	1	
		R6026	D0GA151JA023	RESISTOR	1	
		R6044	D0GA151JA023	RESISTOR	1	
		R6045	D0GA151JA023	RESISTOR	1	
		R6046	D0GA333JA023	RESISTOR	1	
		R6047	D0GA333JA023	RESISTOR	1	
		R6048	D0GA333JA023	RESISTOR	1	
		R6049	D0GA333JA023	RESISTOR	1	
		R6050	D0GA333JA023	RESISTOR	1	
		R6051	D0GA333JA023	RESISTOR	1	
		R6302	D0GBR00J0004	RESISTOR	1	
		R6306	D0GA221JA023	RESISTOR	1	
		R6307	D0GA221JA023	RESISTOR	1	
		R6308	D0GA221JA023	RESISTOR	1	
		R6309	D0GA221JA023	RESISTOR	1	
		R6709	D0GA103JA039	RESISTOR	1	
		R6710	D0GA103JA039	RESISTOR	1	
		R6711	D0GA103JA039	RESISTOR	1	
		R6712	D0GA153JA023	RESISTOR	1	
		R6713	D0GA682JA023	RESISTOR	1	
		R6714	D0GA223JA023	RESISTOR	1	
		R6715	D0GA103JA039	RESISTOR	1	
		R6731	D0GA101JA039	RESISTOR	1	
		R6732	D0GA101JA039	RESISTOR	1	
		R6826	D0GA153JA023	RESISTOR	1	
		R6827	D0GA153JA023	RESISTOR	1	
		R6828	D0GA153JA023	RESISTOR	1	
		R6829	ERJ2RHD183	RESISTOR	1	
		R6830	ERJ2RHD183	RESISTOR	1	
		R6831	ERJ2RHD183	RESISTOR	1	
		R6832	D0GA102JA039	RESISTOR	1	
		R6833	D0GA102JA039	RESISTOR	1	
		R6834	D0GA102JA039	RESISTOR	1	
		R6835	D0GA103JA039	RESISTOR	1	
		R6836	D0GA103JA039	RESISTOR	1	
		R6837	D0GA103JA039	RESISTOR	1	
		R6838	D0GA102JA039	RESISTOR	1	
		R6839	D0GA102JA039	RESISTOR	1	
		R6840	D0GA102JA039	RESISTOR	1	
		R6841	ERJ2RHD182	RESISTOR	1	

		R6842	ERJ2RHD182	RESISTOR	1	

Model No. : HC-X1E/EE/PP/GC/GD Parts List

Change	Safety	Ref. No.	Part No.	Part Name & Description	Q'ty	Remarks
		R6843	ERJ2RHD182	RESISTOR	1	
		R6845	ERJ2RKD680	RESISTOR	1	
		R6951	D0GA222JA023	RESISTOR	1	
		R6952	D0GA330JA023	RESISTOR	1	
		R6953	D0GA330JA023	RESISTOR	1	
		R6954	D0GA331JA023	RESISTOR	1	
		R6955	D0GA330JA023	RESISTOR	1	
		R6956	D0GA330JA023	RESISTOR	1	
		R6957	D0GA331JA023	RESISTOR	1	
		R6958	D0GA330JA023	RESISTOR	1	
		R6959	D0GA330JA023	RESISTOR	1	
		R6960	D0GA331JA023	RESISTOR	1	
		RX401	D1H81034A042	RESISTOR NETWORKS	1	
		RX402	D1H81034A042	RESISTOR NETWORKS	1	
		RX701	D1H81034A042	RESISTOR NETWORKS	1	
		RX702	D1H81034A042	RESISTOR NETWORKS	1	
		RX703	D1H81024A042	RESISTOR NETWORKS	1	
		RX704	D1H81024A042	RESISTOR NETWORKS	1	
		RX901	D1H88204A042	RESISTOR NETWORKS	1	
		RX902	D1H88204A042	RESISTOR NETWORKS	1	
		RX903	D1H88204A042	RESISTOR NETWORKS	1	
		RX904	D1H88204A042	RESISTOR NETWORKS	1	
		RX905	D1H88204A042	RESISTOR NETWORKS	1	
		RX906	D1H88204A042	RESISTOR NETWORKS	1	
		RX907	D1H88204A042	RESISTOR NETWORKS	1	
		RX908	D1H88204A042	RESISTOR NETWORKS	1	
		RX909	D1H88204A042	RESISTOR NETWORKS	1	
		RX910	D1H88204A042	RESISTOR NETWORKS	1	
		RX911	D1H88204A042	RESISTOR NETWORKS	1	
		RX912	D1H88204A042	RESISTOR NETWORKS	1	
		RX3404	D1H81034A042	RESISTOR NETWORKS	1	
		RX3405	D1H84724A042	RESISTOR NETWORKS	1	
		RX3406	D1H84724A042	RESISTOR NETWORKS	1	
		RX3407	D1H84734A042	RESISTOR NETWORKS	1	
		RX3408	D1H84724A042	RESISTOR NETWORKS	1	
		RX3415	D1H81034A042	RESISTOR NETWORKS	1	
		RX3417	D1H81034A042	RESISTOR NETWORKS	1	
		RX3420	D1H81034A042	RESISTOR NETWORKS	1	
		RX3503	D1H81034A042	RESISTOR NETWORKS	1	
		RX3504	D1H81034A042	RESISTOR NETWORKS	1	
		RX3803	D1H84724A042	RESISTOR NETWORKS	1	
		RX6951	D1H81034A042	RESISTOR NETWORKS	1	
		RX6952	D1H81034A042	RESISTOR NETWORKS	1	
		RX6953	D1H81034A042	RESISTOR NETWORKS	1	
		RX6954	D1H81034A042	RESISTOR NETWORKS	1	
		RX6955	D1H81034A042	RESISTOR NETWORKS	1	
		RX6956	D1H81034A042	RESISTOR NETWORKS	1	
		S6701	K0F111A00589	SWITCH	1	
		S6702	K0F111A00589	SWITCH	1	
		S6703	K0F111A00589	SWITCH	1	
		S6704	K0F111A00589	SWITCH	1	
		S6951	VSS0549	SWITCH	1	
		S6952	VSS0549	SWITCH	1	
		S6953	VSS0549	SWITCH	1	
		S6954	VSS0549	SWITCH	1	
		S6955	K0F111A00589	SWITCH	1	
		S6956	K0F111A00589	SWITCH	1	
		S6957	K0F111A00589	SWITCH	1	
		S6958	K0F111A00589	SWITCH	1	
		S6959	K0F111A00589	SWITCH	1	
		S6960	K0F111A00589	SWITCH	1	

		S6961	K0D112B00142	SWITCH	1	

Model No. : HC-X1E/EE/PP/GC/GD Parts List

Change	Safety	Ref. No.	Part No.	Part Name & Description	Q'ty	Remarks
		S6962	K0F111A00589	SWITCH	1	
		S6963	K0F111A00589	SWITCH	1	
		S6964	K0F111A00589	SWITCH	1	
		S6965	K0F111A00589	SWITCH	1	
		S6966	K0F111A00589	SWITCH	1	
		S6967	K0H1BA000580	SWITCH	1	
		S6968	K0F111A00589	SWITCH	1	
		VA501	D4ED18R00008	VARISTOR	1	
		VA502	D4ED18R00008	VARISTOR	1	
		VA503	D4ED18R00008	VARISTOR	1	
		VA504	D4ED18R00008	VARISTOR	1	
		VA1501	D4EDY1310001	VARISTOR	1	
		VA4011	D4EDY1310001	VARISTOR	1	
		VA4012	D4EDY1310001	VARISTOR	1	
		VA4013	D4EDY1310001	VARISTOR	1	
		VA4014	D4EDY1310001	VARISTOR	1	
		VA4015	D4EDY1310001	VARISTOR	1	
		VA4016	D4EDY1310001	VARISTOR	1	
		VA6301	D4EDY1310001	VARISTOR	1	
		VA6303	D4EDY1310001	VARISTOR	1	
		VA6826	D4EDY1310001	VARISTOR	1	
		VA6827	D4EDY1310001	VARISTOR	1	
		VA6828	D4EDY1310001	VARISTOR	1	
		VA6861	D4EDY1310001	VARISTOR	1	
		VR6951	D2BBA14Y0002	VOLUME CH1 AUDIO	1	
		VR6952	D2BBA14Y0002	VOLUME CH1 AUDIO	1	
		X2301	H0J327200230	CRYSTAL OSCILLATOR	1	
		X3101	H1C2705B0044	CRYSTAL OSCILLATOR	1	
		ZB6951	K3ZZ00500014	BATTERY HOLDER	1	

Model No. : HC-X1E/EE/PP/GC/GD Frame and Casing Section (1)

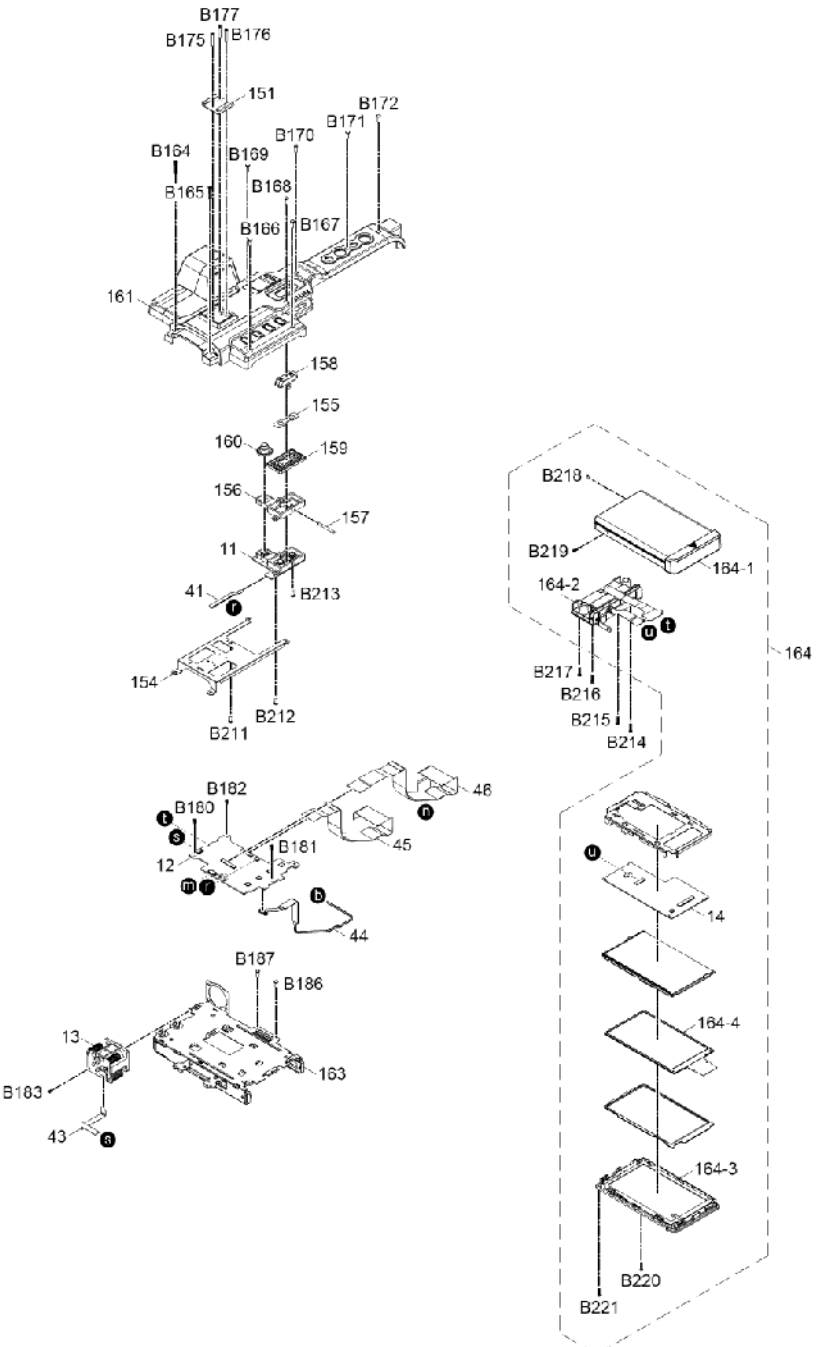

Model No. : HC-X1E/EE/PP/GC/GD Frame and Casing Section (2)

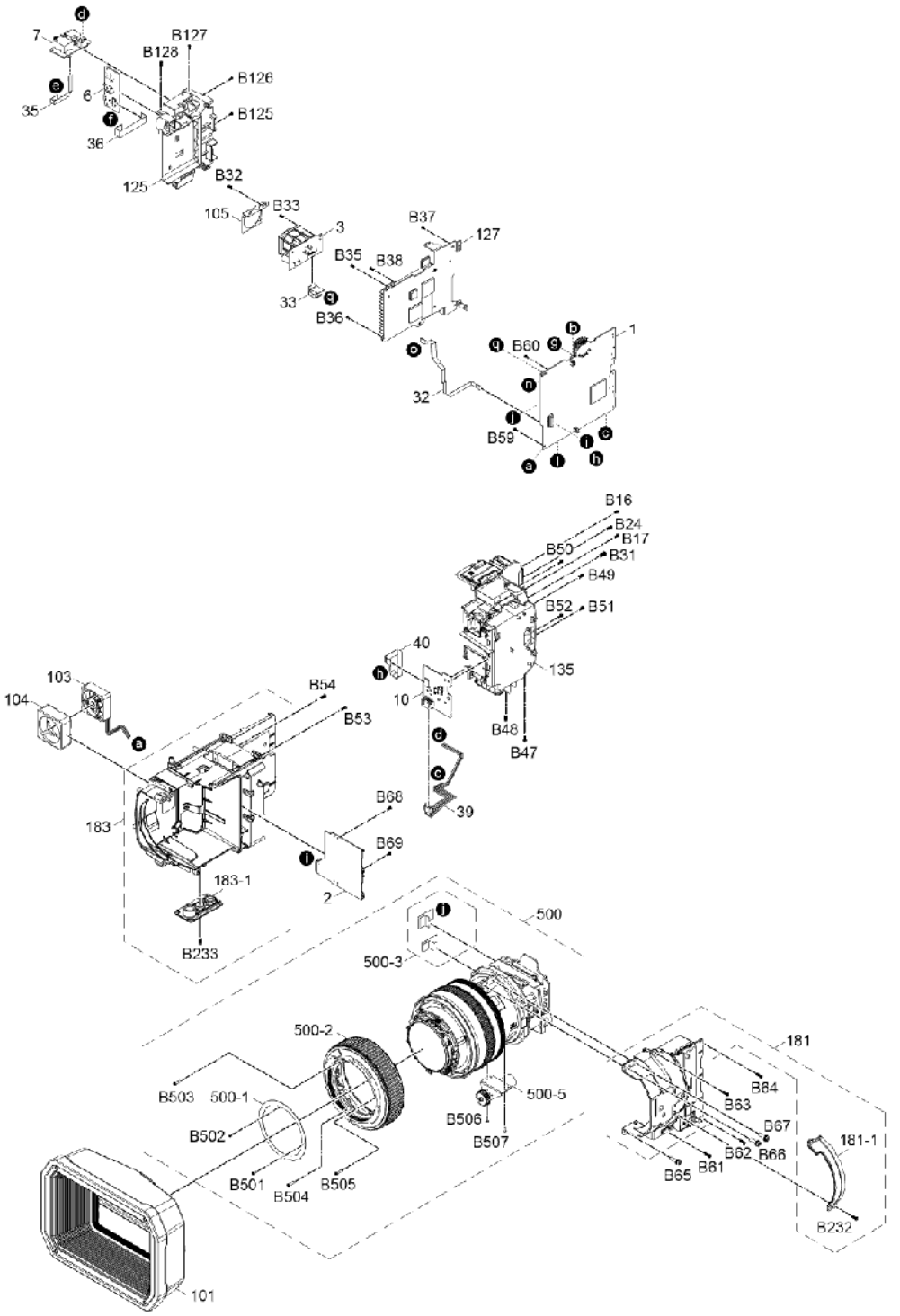

Model No. : HC-X1E/EE/PP/GC/GD Frame and Casing Section (3)

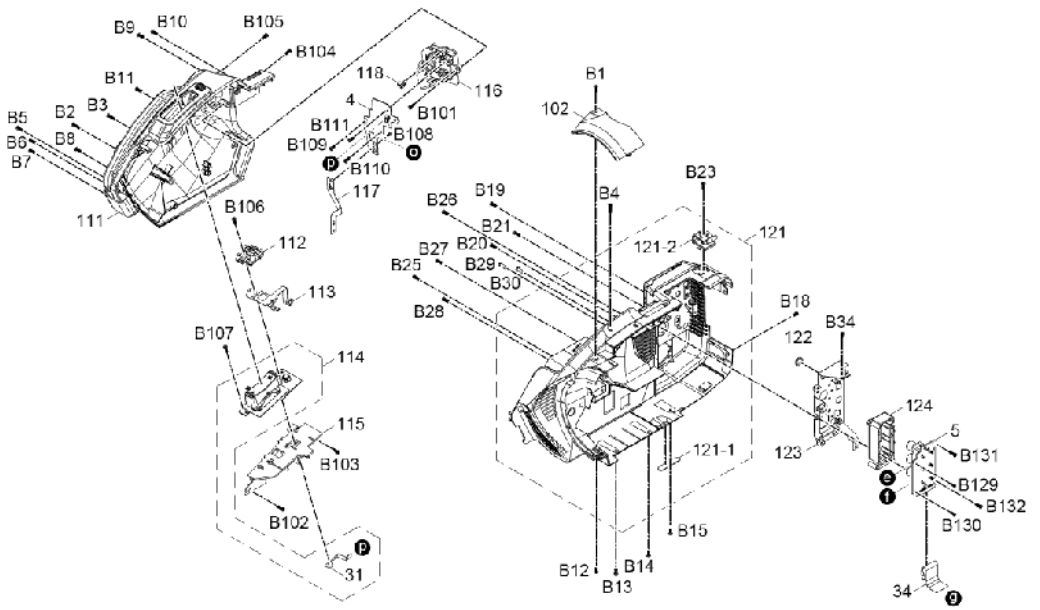

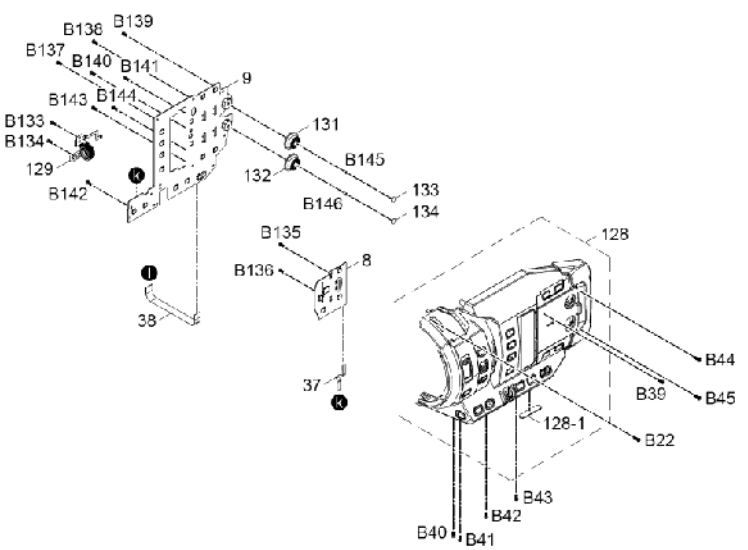

Model No. : HC-X1E/EE/PP/GC/GD Frame and Casing Section (4)

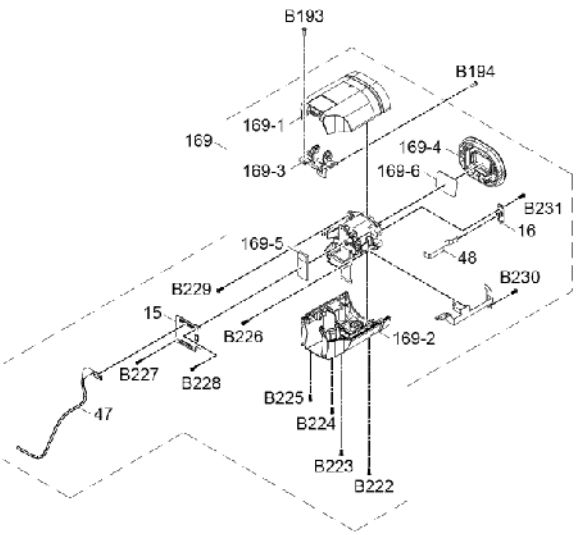

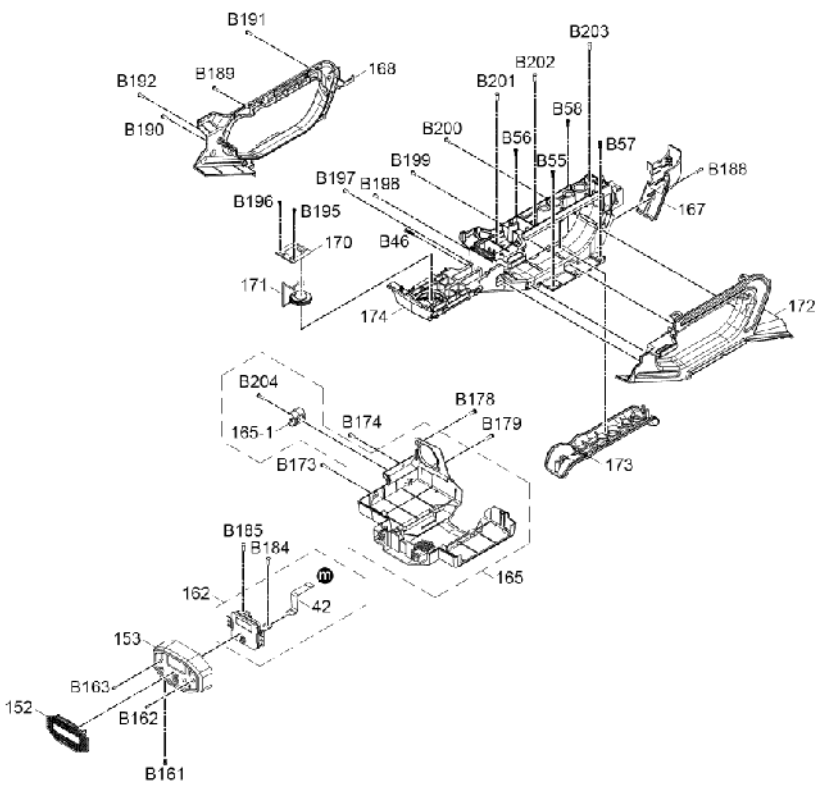

Model No. : HC-X1E/EE/PP/GC/GD Packing Parts and Accessories Section

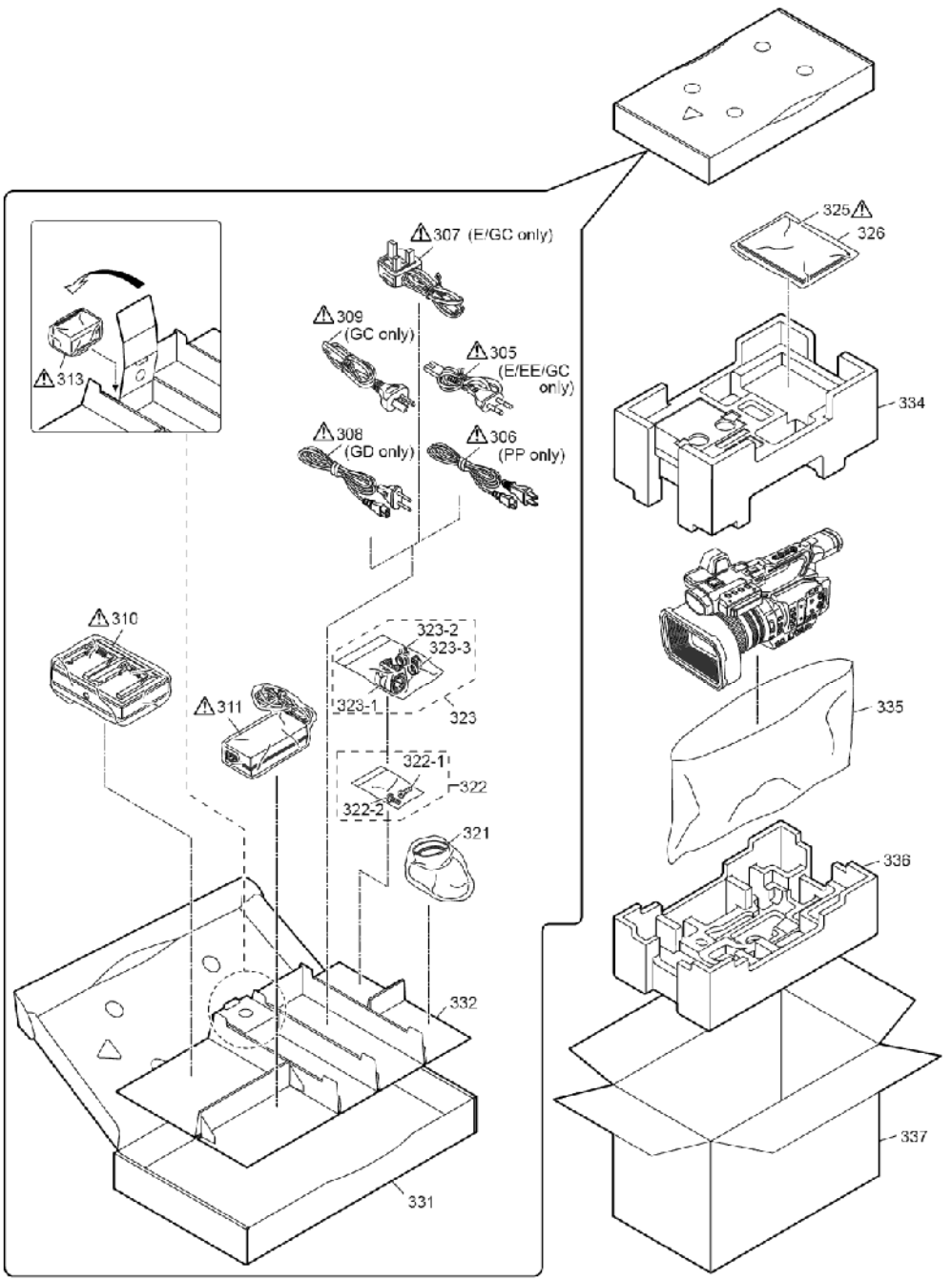

Model No. : HC-X1E/EE/PP/GC/GD Parts List

Change	Safety	Ref. No.	Part No.	Part Name & Description	Q'ty	Remarks
		1	SEP0912AB	MAIN P.C.B.	1	(RTL)E.S.D.
		2	SEP0914AA	SD HOLDER P.C.B.	1	
		3	SEP0919AA	XLR REAR P.C.B.	1	E.S.D.
		4	SEP0927AA	POWER SS P.C.B.	1	E.S.D.
		5	SEP0917AA	JACK PIN P.C.B.	1	(RTL)E.S.D.
		6	SEP0915AA	JACK A WIRED P.C.B.	1	(RTL)
		7	SEP0918AA	JACK DC P.C.B.	1	(RTL)
		8	SEP0925AA	OPERATION CAMERA P.C.B.	1	E.S.D.
		9	SEP0926AA	SIDE R OPERATION P.C.B.	1	(RTL)E.S.D.
		10	SEP0924AA	BATTERY CATCHER P.C.B.	1	(RTL)E.S.D.
		11	SEP0930AA	SUB SS ZOOM P.C.B.	1	
		12	SEP0921AA	HANDLE OPERATION P.C.B.	1	(RTL)E.S.D.
		13	SEP0920AA	XLR FRONT P.C.B.	1	E.S.D.
		14	SEP0923AB	MONITOR P.C.B.	1	(RTL)E.S.D.
		15	SEP0469AA	EVF P.C.B.	1	E.S.D.
		16	SEP0929AA	EYE SENSOR P.C.B.	1	E.S.D.
		31	STJ0218	USER OP FFC	1	
		32	STJ0213	POWER SS FFC	1	
		33	STJ0130	XLR REAR FFC	1	
		34	STJ0214	BNC FFC	1	
		35	STJ0215	HEADPHONE FFC	1	
		36	STJ0216	A WIRED FFC	1	
		37	STJ0218	USER OP FFC	1	
		38	STJ0217	AUDIO OPRATION FFC	1	
		39	SEE0270	DC BATT. WIRE	1	
		40	STJ0219	GYRO FFC	1	
		41	STJ0128	SUB SS ZOOM FFC	1	
		42	STJ0120	MIC FFC	1	
		43	STJ0129	XLR FRONT FFC	1	
		44	STK0015A	MONITOR SLIM WIRE	1	
		45	STJ0211	HANDLE OP A FFC	1	
		46	STJ0212	HANDLE OP B FFC	1	
		47	STK0014A	EVF SLIM WIRE	1	
		48	STJ0134	EYE SENSOR FFC	1	
		101	SYK1585	LENS HOOD UNIT	1	
		102	SKK0447K	LENS TOP CASE	1	
		103	L6FAYYYD0036	FAN MOTOR	1	
		104	VMG2128	FAN DAMPER	1	
		105	SMA0217	XLR REAR PLATE	1	
		111	SYK1584	GRIP UNIT	1	
		112	SGU0231	REC CHECK BUTTON	1	
		113	SMA0405	PHOTO EARTH PLATE	1	
		114	1GE1UX90Z	ZOOM LEVER UNIT	1	
		115	SGQ0879	ZOOM BASE	1	
		116	SYQ0835	POWER SS UNIT	1	
		117	SMA0404	POWER SS EARTH PLATE	1	
		118	VGL1404-M	POWER PANELIGHT	1	
		121	SYK1594	SIDE CASE L UNIT	1	
		121-1	SKA0012K	SET LEG CUSHION	1	
		121-2	SGQ0876	CABLE CLAMPER	1	
		122	VHN0382	M6 NUT	1	
		123	SMA0402	JACK PLATE	1	
		124	SGQ0883	RCA PIECE	1	
		125	SGQ0873	DUCT PIECE	1	
		127	SYD0020	MAIN RADIATION PLATE UNIT	1	
		128	SYK1601	SIDE CASE R UNIT	1	
		128-1	SKA0012K	SET LEG CUSHION	1	
		129	K0RE00300037	KURUPON UNIT	1	
		131	VGU0K96	AUDIO VR KNOB	1	
		132	VGU0K96	AUDIO VR KNOB	1	
		133	VGQ1A44	AUDIO VR SHEET	1	

		134	VGQ1A44	AUDIO VR SHEET	1	

Model No. : HC-X1E/EE/PP/GC/GD Parts List

Change	Safety	Ref. No.	Part No.	Part Name & Description	Q'ty	Remarks
		135	SYK1568	REAR CASE UNIT	1	
		151	VMP8492	SHOE ANGLE	1	
		152	SYK1063-M	MIC COVER UNIT	1	
		153	SKK0289K	MIC CASE	1	
		154	SGG0033	HA TOP ANGLE	1	
		155	SGQ0338	SUB ZOOM SHEET	1	
		156	SGQ0712	SUB ZOOM CASE	1	
		157	VMS8226	SUB ZOOM SHAFT	1	
		158	VGU9208	SUB ZOOM BUTTON	1	
		159	VMG2116	SUB ZOOM BUTTON RUBBER	1	
		160	VGU9988	REC BUTTON	1	
		161	1YM2X1Z	HANDLE CASE T UNIT	1	
		162	SYQ0846	MIC HOLDER UNIT	1	
		163	1GE1UX180Z	HANDLE SLIDE UNIT	1	
		164	SYK1606	LCD UNIT	1	
		164-1	DVPX1001Z	LCD CASE T	1	
		164-2	1YE1UX180Z	LCD HINGE UNIT	1	
		164-3	SYK1573	LCD CASE B UNIT	1	
		164-4	L5BDDYY00072	LCD	1	
		165	SYK1571	HANDLE CASE B UNIT	1	
		165-1	VJF1256	CABLE CLAMPER	1	
		167	SKK0454K	HANDLE CASE REAR	1	
		168	SKK0453K	HANDLE CASE L	1	
		169	SYK1570	EVF UNIT	1	
		169-1	SKK0297K	EVF CASE T	1	
		169-2	SKK0298K	EVF CASE B	1	
		169-3	VXD0623	EVF SHAFT UNIT	1	
		169-4	1YF1UX180Z	EVF PIECE UNIT	1	
		169-5	DVGE1023Z	EVF PCB CUSHION	1	
		169-6	VKW3527	EVF PANEL	1	
		170	SMA0222	SPEAKER ANGLE	1	
		171	L0AA02A00127	SPEAKER	1	
		172	SKK0452K	HANDLE CASE R	1	
		173	SGQ0567	HA GRIP PIECE	1	
		174	SGF0060	HANDLE FRAME	1	
		181	SYK1566	LENS FRAME UNIT	1	
		181-1	SGK0351S	RING ORNAMENT	1	
		183	SYK1565	MAIN FRAME UNIT	1	
		183-1	VGQ1A16	TRIPOD PIECE	1	
		B1	XQN2+B5FJK	SCREW	1	
		B2	XQN2+B8FJK	SCREW	1	
		B3	XQN2+B8FJK	SCREW	1	
		B4	XQN2+B8FJK	SCREW	1	
		B5	XQN2+BJ6FJK	SCREW	1	
		B6	XQN2+BJ6FJK	SCREW	1	
		B7	XQN2+BJ6FJK	SCREW	1	
		B8	XQN2+BJ6FJK	SCREW	1	
		B9	XQN2+BJ6FJK	SCREW	1	
		B10	XQN2+BJ6FJK	SCREW	1	
		B11	XQN2+BJ6FJK	SCREW	1	
		B12	XQN2+B5FJK	SCREW	1	
		B13	XQN2+B5FJK	SCREW	1	
		B14	XQN2+B5FJK	SCREW	1	
		B15	XQN2+B5FJK	SCREW	1	
		B16	XQN2+B5FJK	SCREW	1	
		B17	XQN2+B5FJK	SCREW	1	
		B18	XQN2+B5FJK	SCREW	1	
		B19	XQN2+BJ6FJK	SCREW	1	
		B20	XQN2+BJ6FJK	SCREW	1	
		B21	XQN2+BJ6FJK	SCREW	1	
		B22	XQN2+BJ6FJK	SCREW	1	

		B23	XQN2+BJ6FJK	SCREW	1	

Model No. : HC-X1E/EE/PP/GC/GD Parts List

Change	Safety	Ref. No.	Part No.	Part Name & Description	Q'ty	Remarks
		B24	XQN2+BJ6FJK	SCREW	1	
		B25	SHD0138	SCREW	1	
		B26	SHD0138	SCREW	1	
		B27	SHD0138	SCREW	1	
		B28	SHD0138	SCREW	1	
		B29	XQN26+B6FJK	SCREW	1	
		B30	XQN26+B6FJK	SCREW	1	
		B31	SHD0036	SCREW	1	
		B32	VHD1907	SCREW	1	
		B33	VHD1907	SCREW	1	
		B34	VHD1907	SCREW	1	
		B35	VHD1907	SCREW	1	
		B36	VHD1907	SCREW	1	
		B37	VHD1907	SCREW	1	
		B38	VHD1907	SCREW	1	
		B39	XQN2+B5FJK	SCREW	1	
		B40	XQN2+B5FJK	SCREW	1	
		B41	XQN2+B5FJK	SCREW	1	
		B42	XQN2+B5FJK	SCREW	1	
		B43	XQN2+B5FJK	SCREW	1	
		B44	XQN2+BJ6FJK	SCREW	1	
		B45	XQN2+BJ6FJK	SCREW	1	
		B46	XQN2+BJ10FJK	SCREW	1	
		B47	XQN2+BJ5FJK	SCREW	1	
		B48	XQN2+BJ5FJK	SCREW	1	
		B49	XQN2+B5FJK	SCREW	1	
		B50	XQN2+B5FJK	SCREW	1	
		B51	XQN2+B5FJK	SCREW	1	
		B52	XQN2+B5FJK	SCREW	1	
		B53	SHD0138	SCREW	1	
		B54	SHD0138	SCREW	1	
		B55	SHD0138	SCREW	1	
		B56	SHD0138	SCREW	1	
		B57	SHD0138	SCREW	1	
		B58	SHD0138	SCREW	1	
		B59	VHD1907	SCREW	1	
		B60	VHD1907	SCREW	1	
		B61	SHD0138	SCREW	1	
		B62	SHD0138	SCREW	1	
		B63	SHD0138	SCREW	1	
		B64	SHD0138	SCREW	1	
		B65	XYN3+J10FJ	SCREW	1	
		B66	XYN3+J10FJ	SCREW	1	
		B67	XYN3+J10FJ	SCREW	1	
		B68	VHD1907	SCREW	1	
		B69	VHD1907	SCREW	1	
		B101	XQN2+BJ6FJK	SCREW	1	
		B102	XQN2+BJ6FJK	SCREW	1	
		B103	XQN2+BJ6FJK	SCREW	1	
		B104	XQN2+BJ6FJK	SCREW	1	
		B105	XQN2+BJ6FJK	SCREW	1	
		B106	XQN2+BJ6FJK	SCREW	1	
		B107	XQN2+BJ6FJK	SCREW	1	
		B108	VHD1907	SCREW	1	
		B109	XQN2+BJ5FN	SCREW	1	
		B110	XQN2+BJ5FN	SCREW	1	
		B111	XQN2+BJ5FN	SCREW	1	
		B125	VHD1907	SCREW	1	
		B126	VHD1907	SCREW	1	
		B127	VHD1907	SCREW	1	
		B128	VHD1907	SCREW	1	

		B129	VHD1907	SCREW	1	

Model No. : HC-X1E/EE/PP/GC/GD Parts List

Change	Safety	Ref. No.	Part No.	Part Name & Description	Q'ty	Remarks
		B130	VHD1907	SCREW	1	
		B131	XQN2+BJ5FN	SCREW	1	
		B132	XQN2+BJ5FN	SCREW	1	
		B133	XQN2+BJ5FN	SCREW	1	
		B134	XQN2+BJ5FN	SCREW	1	
		B135	XQN2+BJ5FN	SCREW	1	
		B136	XQN2+BJ5FN	SCREW	1	
		B137	XQN2+BJ5FN	SCREW	1	
		B138	XQN2+BJ5FN	SCREW	1	
		B139	XQN2+BJ5FN	SCREW	1	
		B140	XQN2+BJ5FN	SCREW	1	
		B141	XQN2+BJ5FN	SCREW	1	
		B142	XQN2+BJ5FN	SCREW	1	
		B143	XQN2+BJ5FN	SCREW	1	
		B144	XQN2+BJ5FN	SCREW	1	
		B145	XQN14+B4FN	SCREW	1	
		B146	XQN14+B4FN	SCREW	1	
		B161	XQN2+BJ6FJK	SCREW	1	
		B162	XQN2+BJ6FJK	SCREW	1	
		B163	XQN2+BJ6FJK	SCREW	1	
		B164	XQN2+BJ12FJK	SCREW	1	
		B165	XQN2+BJ12FJK	SCREW	1	
		B166	XQN2+B6FJK	SCREW	1	
		B167	XQN2+B6FJK	SCREW	1	
		B168	XQN2+B6FJK	SCREW	1	
		B169	XQN2+B6FJK	SCREW	1	
		B170	XQN2+B6FJK	SCREW	1	
		B171	XQN2+B6FJK	SCREW	1	
		B172	XQN2+B6FJK	SCREW	1	
		B173	XQN2+B6FJK	SCREW	1	
		B174	XQN2+B6FJK	SCREW	1	
		B175	XQS2+A12FN	SCREW	1	
		B176	XQS2+A12FN	SCREW	1	
		B177	XQS2+A12FN	SCREW	1	
		B178	XQN26+B6FJK	SCREW	1	
		B179	XQN26+B6FJK	SCREW	1	
		B180	VHD1919	SCREW	1	
		B181	VHD1919	SCREW	1	
		B182	VHD1919	SCREW	1	
		B183	VHD1919	SCREW	1	
		B184	XQN2+B6FJK	SCREW	1	
		B185	XQN2+B6FJK	SCREW	1	
		B186	XQN2+B6FJK	SCREW	1	
		B187	XQN2+B6FJK	SCREW	1	
		B188	XQN2+B6FJK	SCREW	1	
		B189	XQN2+B6FJK	SCREW	1	
		B190	XQN2+B6FJK	SCREW	1	
		B191	XQN2+B6FJK	SCREW	1	
		B192	XQN2+B6FJK	SCREW	1	
		B193	SHD0138	SCREW	1	
		B194	SHD0138	SCREW	1	
		B195	VHD1919	SCREW	1	
		B196	VHD1919	SCREW	1	
		B197	XQN2+BJ5FN	SCREW	1	
		B198	XQN2+BJ5FN	SCREW	1	
		B199	XQN2+BJ5FN	SCREW	1	
		B200	XQN2+BJ5FN	SCREW	1	
		B201	XQN2+BJ6FJK	SCREW	1	
		B202	XQN2+BJ6FJK	SCREW	1	
		B203	XQN2+BJ6FJK	SCREW	1	
		B204	XQN2+BJ6FJK	SCREW	1	

		B211	XQN2+BJ6FJK	SCREW	1	

Model No. : HC-X1E/EE/PP/GC/GD Parts List

Change	Safety	Ref. No.	Part No.	Part Name & Description	Q'ty	Remarks
		B212	XQN2+BJ6FJK	SCREW	1	
		B213	XQN2+BJ6FJK	SCREW	1	
		B214	XQN16+BJ8FN	SCREW	1	
		B215	XQN16+BJ8FN	SCREW	1	
		B216	XQN16+BJ8FN	SCREW	1	
		B217	XQN16+BJ8FN	SCREW	1	
		B218	VHD1687	SCREW	1	
		B219	VHD1687	SCREW	1	
		B220	XQN14+BJ4FJK	SCREW	1	
		B221	XQN14+BJ4FJK	SCREW	1	
		B222	XQN2+BJ6FJK	SCREW	1	
		B223	XQN2+BJ6FJK	SCREW	1	
		B224	XQN2+BJ6FJK	SCREW	1	
		B225	XQN2+BJ6FJK	SCREW	1	
		B226	XQN2+BJ6FJK	SCREW	1	
		B227	XQN2+BJ6FJK	SCREW	1	
		B228	XQN2+BJ6FJK	SCREW	1	
		B229	XQN2+BJ6FJK	SCREW	1	
		B230	XQN2+BJ6FJK	SCREW	1	
		B231	XQN2+BJ6FJK	SCREW	1	
		B232	XQN2+BJ5FN	SCREW	1	
		B233	XQN2+B5FJK	SCREW	1	
		500	LOU3Z242K2Z	CAMERA LENS UNIT	1	
		500-1	SGH0040K	LENS NAME PLATE	1	
		500-2	MDE1Z242K2Z	MF RING UNIT	1	
		500-3	STQ0001Z	MOS FPC UNIT	1	
		500-5	L6BAYYYD0002	ZOOM MOTOR	1	
		B501	VHD1972	SCREW	1	
		B502	VHD1972	SCREW	1	
		B503	VHD1976	SCREW	1	
		B504	VHD1976	SCREW	1	
		B505	VHD1976	SCREW	1	
		B506	VHD1974	SCREW	1	
		B507	VHD1974	SCREW	1	
	⚠	305	K2CQ2YY00117	AC CABLE	1	E,EE,GC
	⚠	306	K2CA2YY00259	AC CABLE	1	PP
	⚠	307	K2CT2YY00095	AC CABLE	1	E,GC
	⚠	308	K2CR2YY00026	AC CABLE	1	GD
	⚠	309	K2CJ2YY00052	AC CABLE	1	GC
	⚠	310	SAB0002AB	DUAL BATTERY CHARGER	1	
	⚠	311	SAE0011AE	AC ADAPTOR	1	
	⚠	313	----	BATTERY PACK	1	E,PP
	⚠	313	----	BATTERY PACK	1	EE,GC,GD
		321	SYA0048	EYE CUP	1	
		322	VYC1144	MIC HOLDER ADAPTOR UNIT	1	
		322-1	XSB4+12FJK	SCREW	1	
		322-2	XSB4+12FJK	SCREW	1	
		323	SYA0021	MIC HOLDER UNIT	1	
		323-1	VYC1146	MIC HOLDER	1	
		323-2	VJF1468	XLR CAP	1	
		323-3	VJF1468	XLR CAP	1	
	⚠	325	DVQX1101Z	OPERATING INSTRUCTIONS(ENGLISH/FRENCH/SPANISH)	1	PP
	⚠	325	DVQX1102Z	OPERATING INSTRUCTIONS(ENGLISH)	1	E,GC
	⚠	325	DVQX1103Z	OPERATING INSTRUCTIONS(GERMAN/FRENCH/ITALIAN)	1	E
	⚠	325	DVQX1104Z	OPERATING INSTRUCTIONS(SPANISH/DUTCH/SWEDISH)	1	E
	⚠	325	DVQX1105Z	OPERATING INSTRUCTIONS(POLISH/CZECH/HUNGARIAN)	1	E

	⚠	325	DVQX1106Z	OPERATING INSTRUCTIONS(RUSSIAN/UKRAINIAN)	1	EE

Model No. : HC-X1E/EE/PP/GC/GD Parts List

Change	Safety	Ref. No.	Part No.	Part Name & Description	Q'ty	Remarks
	⚠	325	DVQX1107Z	OPERATING INSTRUCTIONS(ARABIC)	1	GC
	⚠	325	DVQX1108Z	OPERATING INSTRUCTIONS (ENGLISH/KOREA)	1	GD
		326	VPF1545	BAG.POLYETHYLENE	1	
		331	VPK5145	ACCESSRI BOX	1	
		332	VPN7319	PAD(ACCESSORY BOX)	1	
		334	DVPN1016Z	CUSHION(TOP)	1	
		335	VPF1179	PROTECT BAG	1	
		336	DVPN1017Z	CUSHION(BOTTOM)	1	
		337	DVPG1031Z	PACKING CASE	1	